TYPICAL CASEWORK NOTES:

NOTES TYPICAL ALL SHEETS

1. PROVIDE SOLID WOOD BLOCKING OR STEEL BACKING PLATE AS REQUIRED FOR UPPER WALL CABINETS.
2. ALL EXPOSED TO VIEW WALL CLEATS TO BE PLAM.
3. ALL EXPOSED TO VIEW FASTENERS TO BE CHROME PLATED OVAL HEADS SCREWS WITH CHROME COUNTERSUNK WASHERS, EQUALLY SPACED AND CENTERED.
4. FIELD LOCATE ALL GROMMETS, COORDINATE LOCATIONS WITH OWNER.
5. CONTRACTOR TO FIELD VERIFY ALL EQUIPMENT AND APPLIANCES PRIOR SUBMITTAL OF SHOP DRAWINGS AND FABRICATION.
6. SEE INTERIOR COLOR KEY FOR THICKNESS OF SOLID SURFACE MATERIAL AT BACKSPLASHES AND COUNTERTOPS.
7. CASEWORK FABRICATOR TO PROVIDE ADEQUATRE COUNTERTOP SUBSTRATE TO SPAN DISTANCES INDICATED ON DRAWINGS.

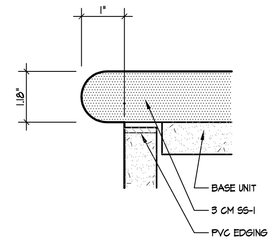

18 A9.3 COUNTERTOP NOSING
NTS — AT SOLID SURFACE

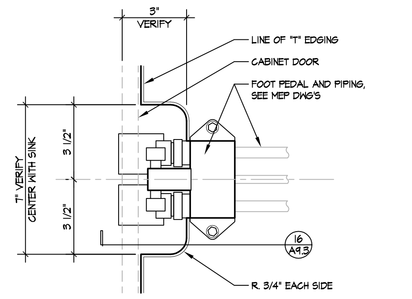

17 A9.3 DETAIL
NTS

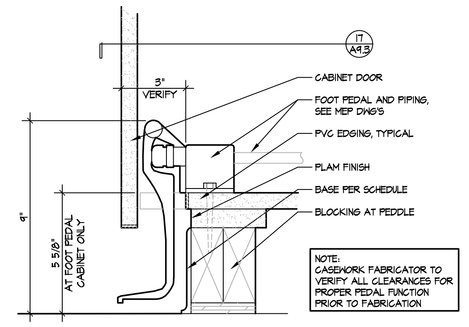

16 A9.3 DETAIL
NTS

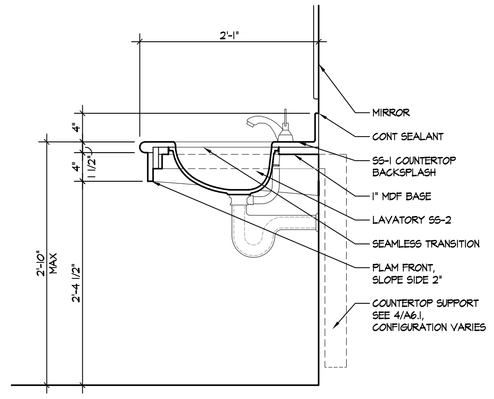

15 A9.3 SECTION
SCALE: 1" = 1'-0"

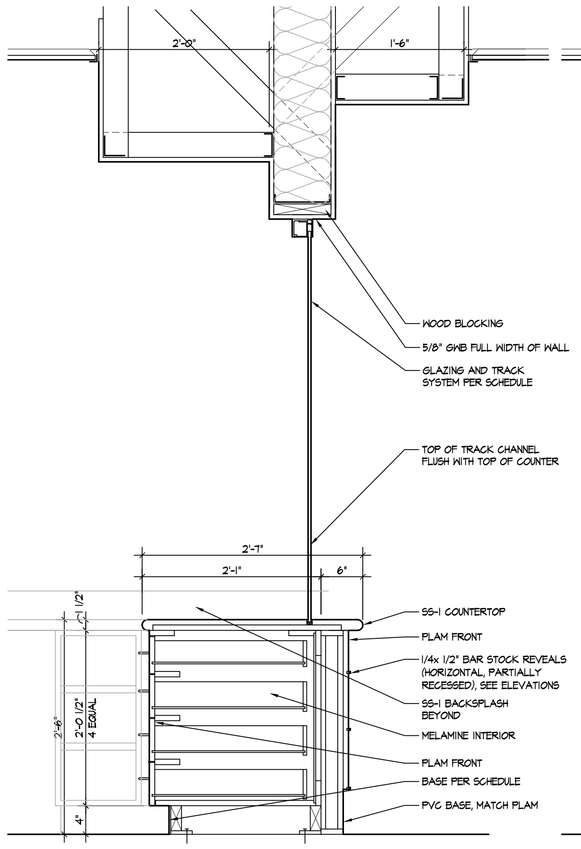

14 A9.3 SECTION
SCALE: 1" = 1'-0"

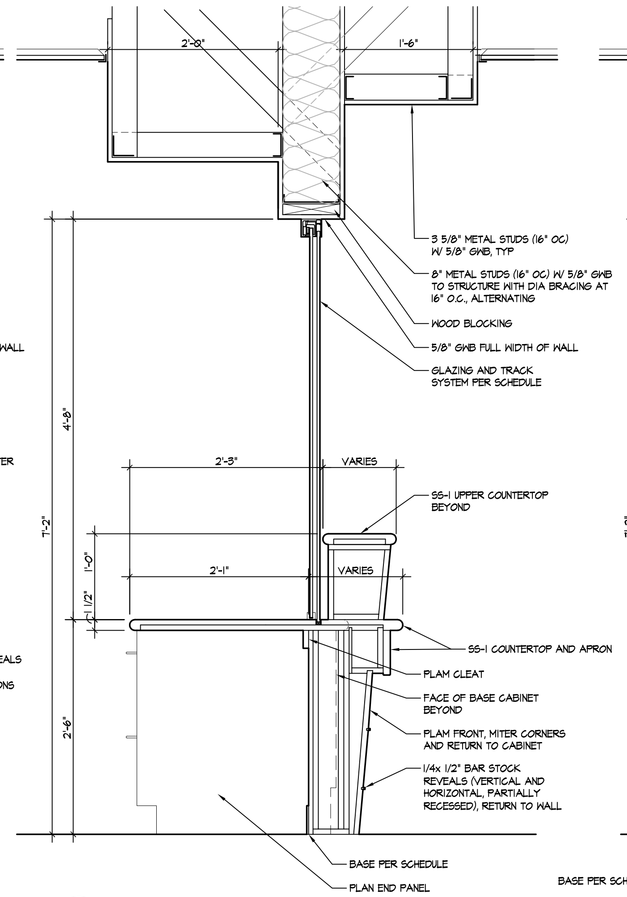

13 A9.3 SECTION
SCALE: 1" = 1'-0"

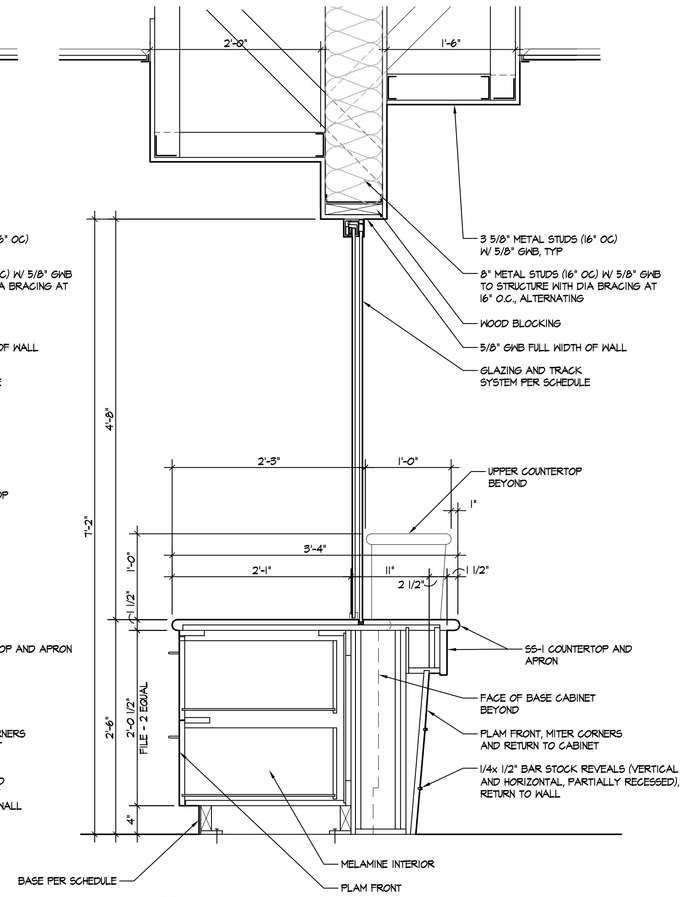

12 A9.3 SECTION
SCALE: 1" = 1'-0"

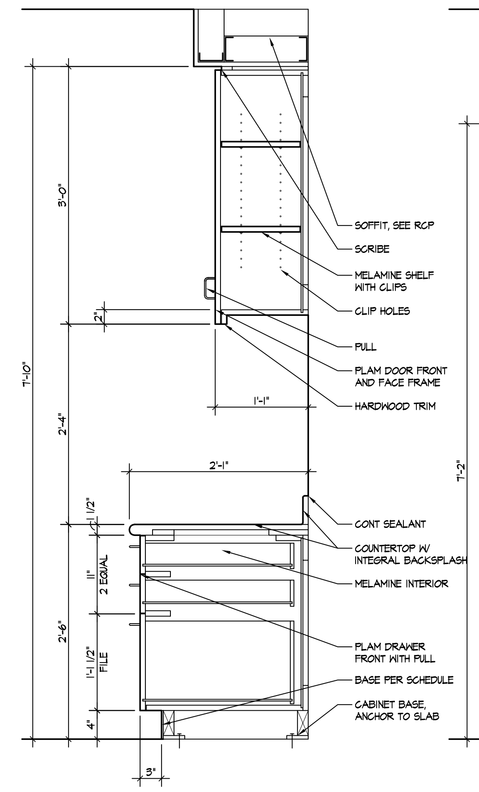

11 A9.3 SECTION
SCALE: 1" = 1'-0"

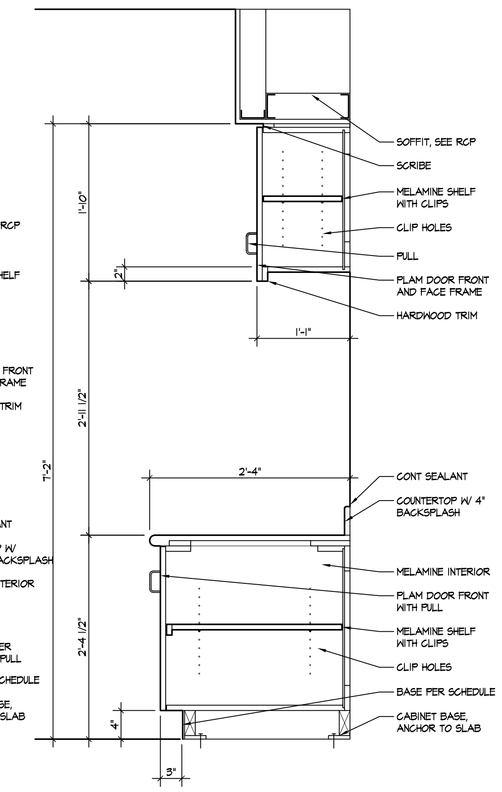

10 A9.3 SECTION
SCALE: 1" = 1'-0"

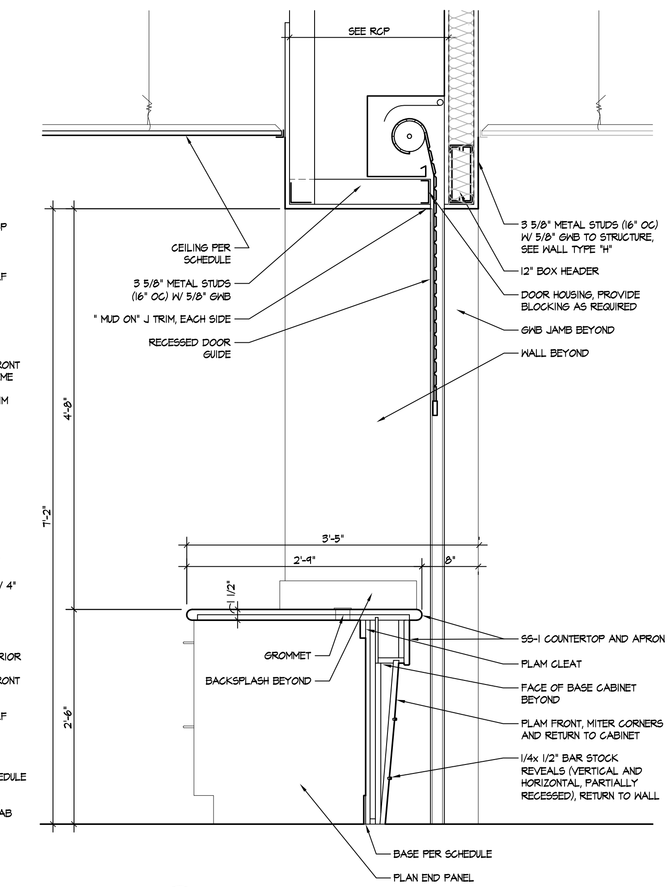

9 A9.3 SECTION
SCALE: 1" = 1'-0"

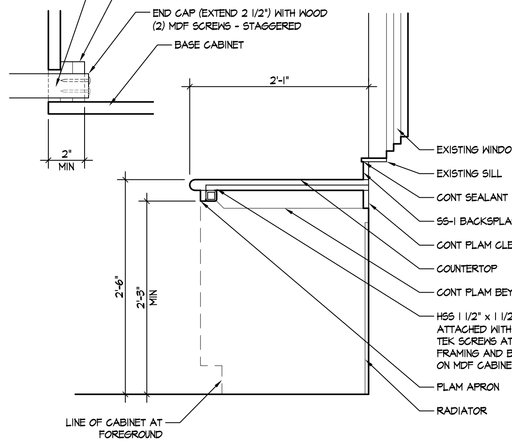

8A A9.3 SECTION
SCALE: 1" = 1'-0"

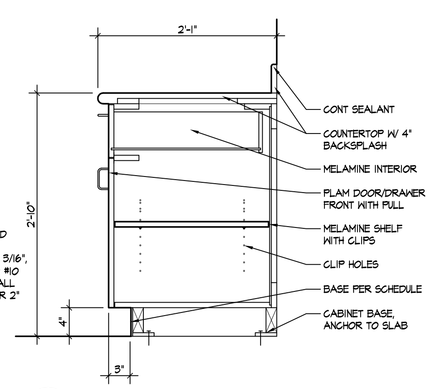

7 A9.3 SECTION
SCALE: 1" = 1'-0"

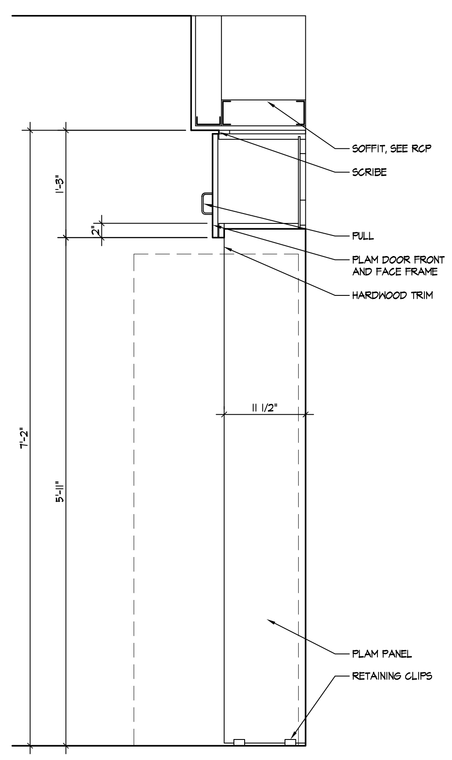

5 A9.3 SECTION
SCALE: 1" = 1'-0"

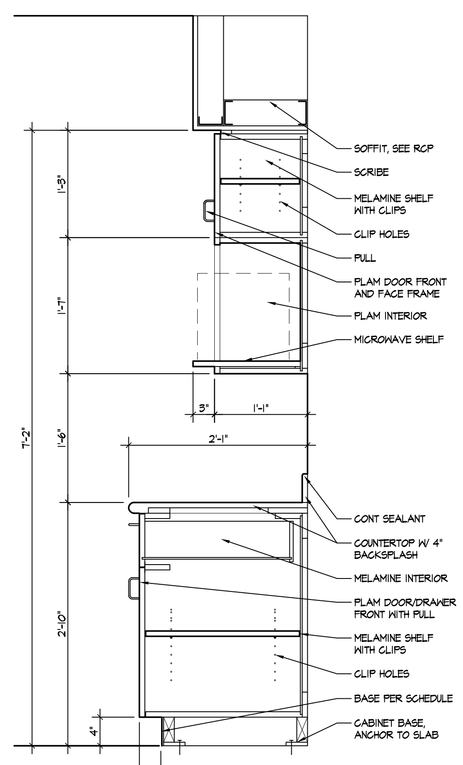

4 A9.3 SECTION
SCALE: 1" = 1'-0"

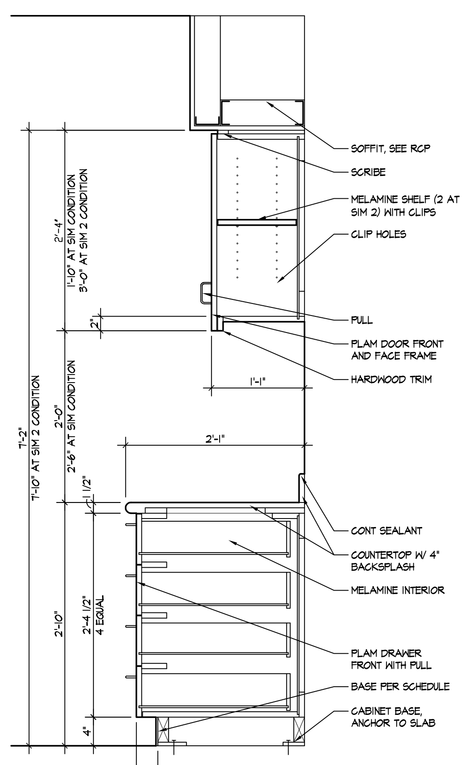

3 A9.3 SECTION
SCALE: 1" = 1'-0"

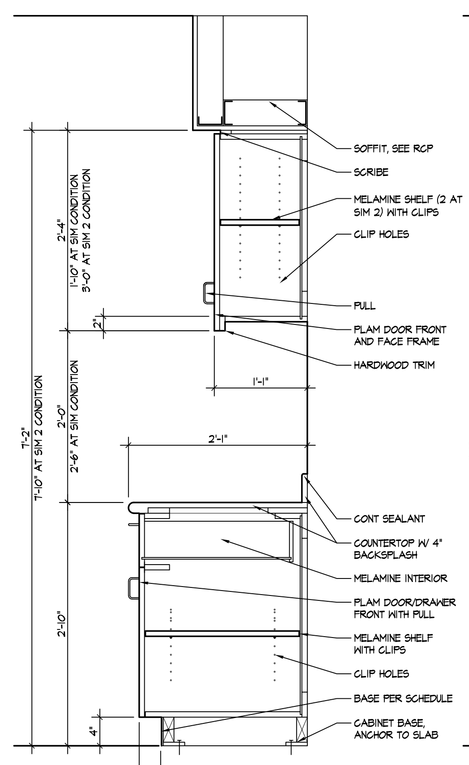

2 A9.3 SECTION
SCALE: 1" = 1'-0"

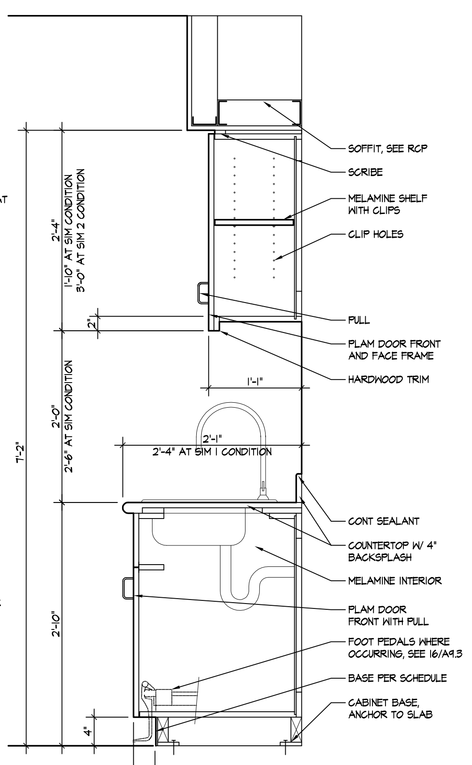

1 A9.3 SECTION
SCALE: 1" = 1'-0"

Revisions:	Date

© 2012 Calvin L. Hinz Architects P.C.

These plans are specifically designed for construction by Calvin L. Hinz Architects and are intended for no other purposes. Permission for use of this document in part or whole without written consent of Calvin L. Hinz Architects is prohibited.

IMPORTANT CONTRACTOR'S NOTE

1. ALL CONTRACTORS ARE RESPONSIBLE FOR REVIEWING ENTIRE SET OF DOCUMENTS TO DETERMINE THEIR FULL SCOPE OF WORK. CONTRACTOR SHALL NOT BE ALLOWED EXTRA COSTS DUE TO FAILURE TO REVIEW ENTIRE SET OF DOCUMENTS.
2. ANY USE OF THESE ELECTRONIC DRAWINGS OR SCALING OF THE PRINTED DOCUMENTS ARE DONE SO AT THE CONTRACTORS RISK.

REGISTERED PROFESSIONAL ARCHITECT — CALVIN L. HINZ — A-1793 — STATE OF NEBRASKA

ARCHITECT/ENGINEERS:

CLH Calvin L. Hinz Architects, P.C.
Calvin L. Hinz Architects, P.C.
3705 North 200th Street
Elkhorn, Nebraska 68022
Phone:402.291.6941 Fax: 402.291.9193

KRS ENGINEERING
11620 ARBOR STREET SUITE 100
OMAHA, NEBRASKA 68144
PHONE: 402. 932. 0100
FAX: 402. 932. 1001
www.krsengineering.com
KRS #

COPYRIGHT 2011
This document and the information contained may not be reproduced without the express written permission of KRS Engineering, LLC. Unauthorized copying, disclosure or construction use are prohibited by the copyright law.

Drawing Title: CASEWORK SECTIONS

Approved Project Director: KEVIN HUTSELL

CONSTRUCTION DOCUMENT (CD-3) SUBMITTAL (100%)
April 13, 2012

Project Title: RENOVATE BACKFILL CANTEEN SPACE NWIHCS

Location: VAMC Grand Island, NE

Date: APRIL 13, 2012 | Checked: CH | Drawn:

Project Number: 636-12-103

Building Number: ONE

Drawing Number: A9.3

Dwg. 11 of 40

Office of Construction and Facilities Management
Department of Veterans Affairs

VA FORM 08-6231

P:\Projects - Active\2012-02 VA GI Specialty Clinic- Canteen Backfill\CD8\12-02 A9.1.dwg 4-25-12 08:16:19 AM mkearney