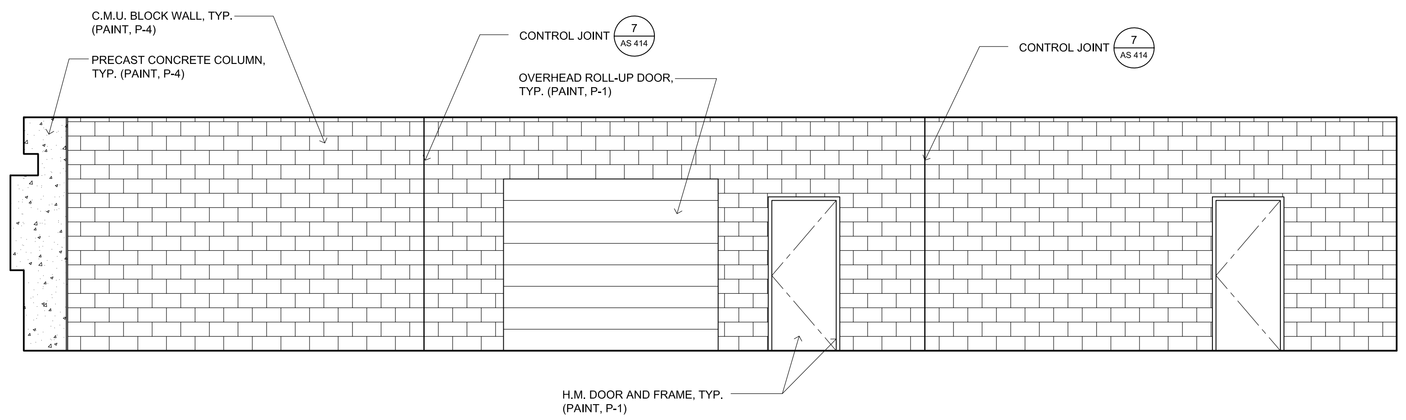

PARKING GARAGE AT STORAGE AND ELECTRICAL

WEST

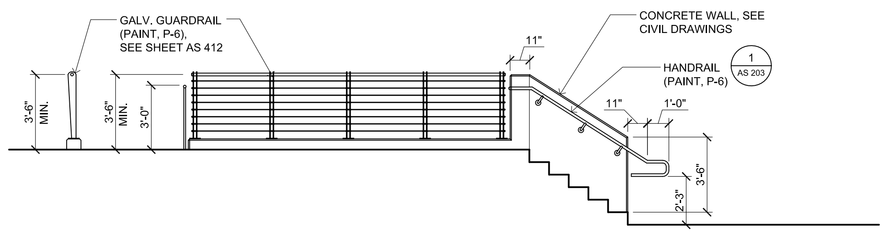

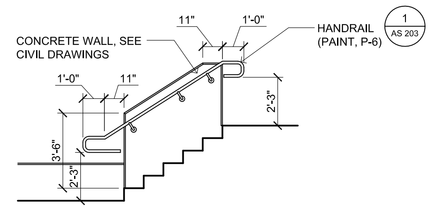

CONCRETE STAIRS AND HANDRAIL

EXTERIOR ELEVATIONS

SCALE: 1/4" = 1'-0"

NOTES:
1. SEE CIVIL DRAWINGS FOR WALL HEIGHTS AND DIMENSIONS.

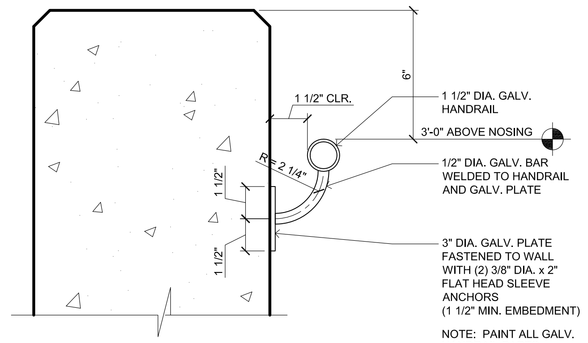

1 HANDRAIL

SCALE: 3" = 1'-0"

CONSTRUCTION DOCUMENTS - FINAL SUBMISSION

Revisions:	Date

CONSULTANTS:

REGISTERED PROFESSIONAL ENGINEER ERIC CHRISTOPHER FRAMPTON No. 64567 EXPIRES: 06/30/2011 CIVIL STATE OF CALIFORNIA

ARCHITECT/ENGINEERS:

Frampton Consulting Engineers
Civil ◇ Structural ◇ Design ◇ Construction
895 W. Ashlan Ave. Clovis, CA 93612
TEL:(559)346-0800 FAX:(559)346-0900
EFRAMPTON@FCE-ENG.COM

Drawing Title: Exterior Elevations and Exterior Stairs –	Project Title: VA Northern California Health Care System Mental Health Parking Structure		Project Number: 612 - CSI - 102
			Building Number: –
Approved: Project Director	Location: 10535 Hospital Way, Mather, CA 95655		Drawing Number: AS 203
	Date: 05/19/2011	Checked: – / Drawn: –	Dwg. 40 of 122

Office of Construction and Facilities Management

Department of Veterans Affairs

VA FORM 08-6231