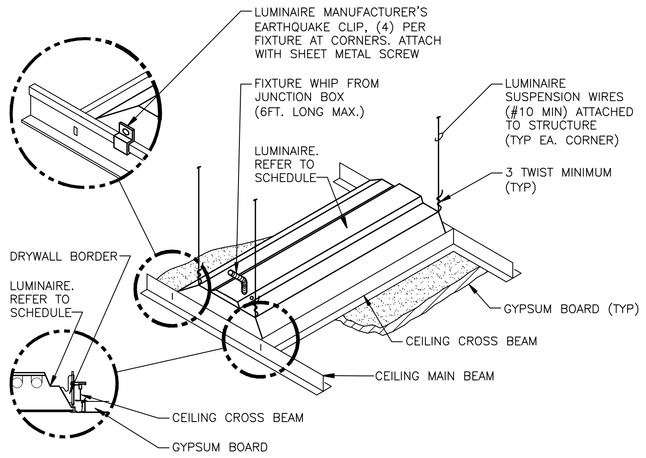

1 LUMINAIRE MOUNTING - GYPBOARD CEILING
NTS

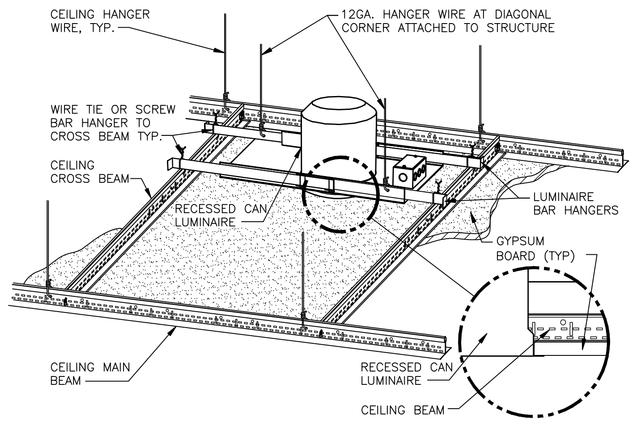

2 DOWNLIGHT MOUNTING - GYPBOARD CEILING
NTS

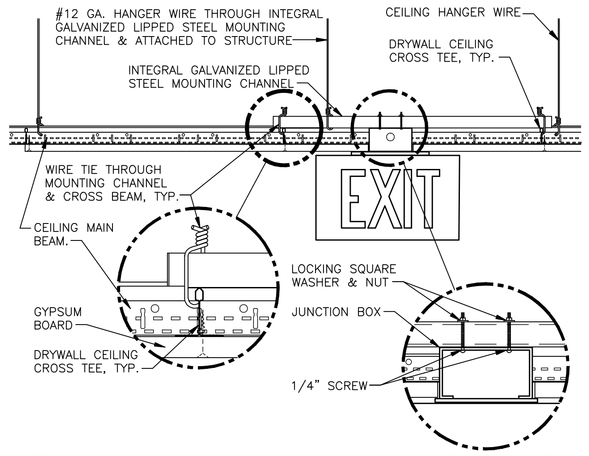

3 EXIT SIGN MOUNTING - GYPBOARD CEILING
NTS

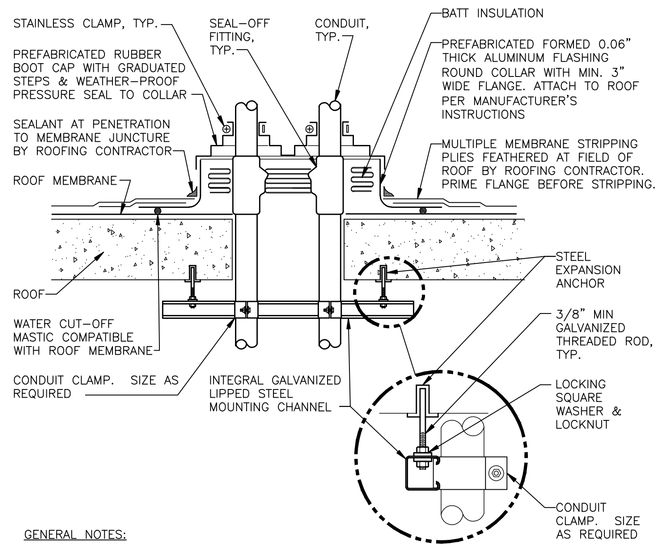

GENERAL NOTES:

1. MAINTAIN A MINIMUM CLEARANCE OF 12" [308mm] ON ALL SIDES OF ROOF PENETRATION FROM WALLS, CURBS, AND OTHER PROJECTIONS TO FACILITATE PROPER FLASHING.
2. FLANGES OF ADJACENT FLASHINGS SHALL NOT BE CUT OR OVERLAPPED.
3. VERIFY ROOF & STRUCTURAL SYSTEM WITH ARCHITECT.
4. COORDINATE FLASHING INSTALLATION WITH ROOFING CONTRACTOR TO ENSURE PROPER METHODS & MATERIALS ARE USED TO MAINTAIN ROOF WARRANTY.

7 ROOF PENETRATION DETAIL
NTS

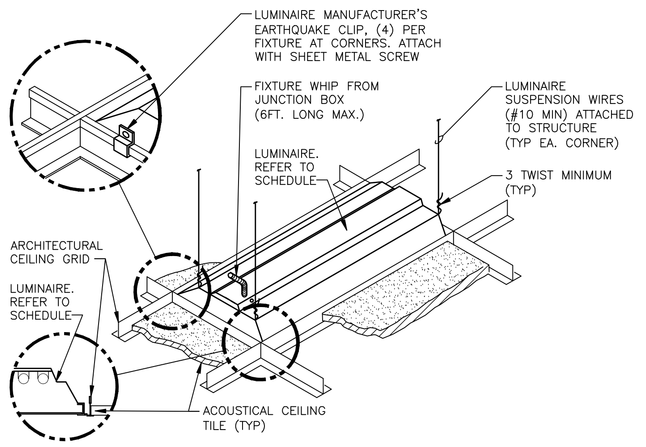

4 LUMINAIRE MOUNTING - LAY-IN CEILING
NTS

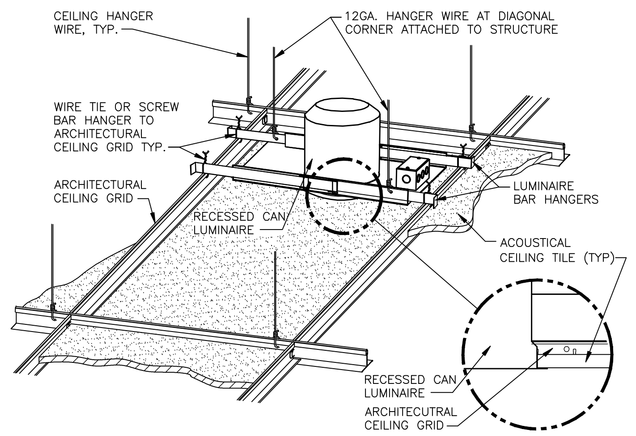

5 DOWNLIGHT MOUNTING - LAY-IN CEILING
NTS

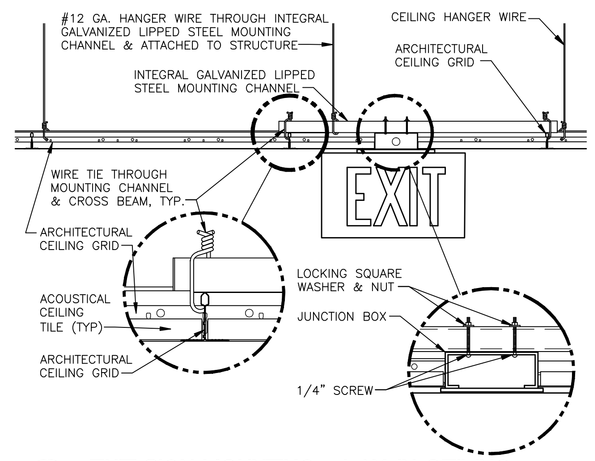

6 EXIT SIGN MOUNTING - LAY-IN CEILING
NTS

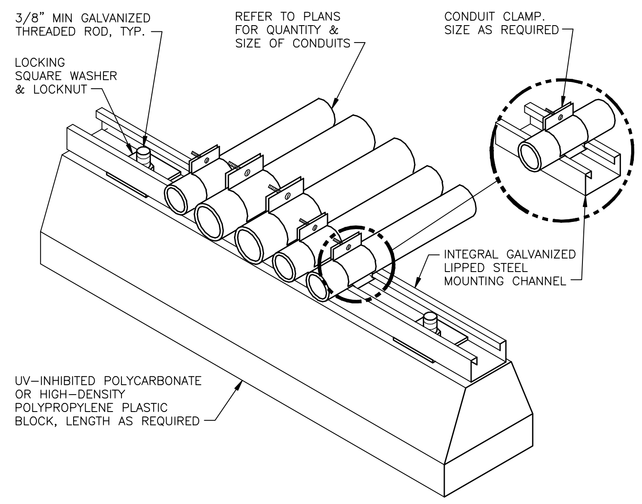

8 ROOF CONDUIT SUPPORT DETAIL
NTS

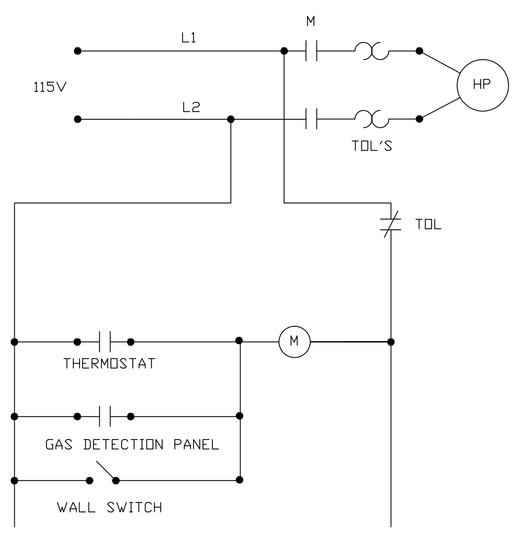

9 SIDEWALL EXHAUST FAN CONTROL DIAGRAM
NTS

Revisions	Date
100% Submission	7/02/10
90% Submission	5/27/10
60% Submission	4/22/10

VA WESTERN NEW YORK HEALTHCARE SYSTEM
3495 BAILEY AVENUE
BUFFALO, NEW YORK 14215

URS — BUFFALO, NY., 77 GOODELL ST 716-856-5636
Architect

stamp

CARDIOLOGY	DATE	ENGINEERING MANAGER	DATE
INFECTION CONTROL	DATE	CARELINE MANAGER	DATE
SAFETY OFFICER	DATE	CHIEF OF STAFF	DATE

Drawing Title: ELECTRICAL DETAILS

Project Title: RENOVATION OF BLDG #1, 2ND FLOOR, B-WARD

Date: JULY 2, 2010 (UPDATED 10/07/10)

Station No. 528

MEDICAL CENTER DIRECTOR DATE

ASSOCIATE MEDICAL CENTER DIRECTOR DATE

Building Number | Checked | Drawn

Location: V.A.M.C. BATAVIA, NEW YORK

09-352 E-700

Office of Facilities

Department of Veterans Affairs