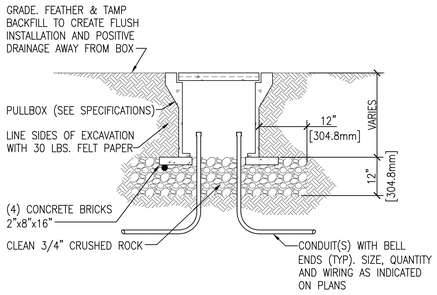

UNDERGROUND CONCRETE PULLBOX

SCALE: NONE — INSTALLATION IN TURF AREAS

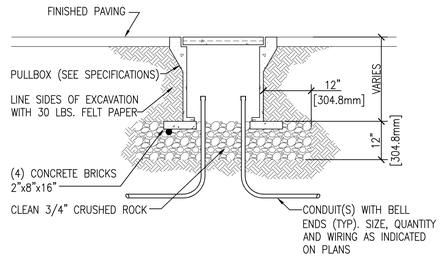

UNDERGROUND CONCRETE PULLBOX

SCALE: NONE — INSTALLATION IN PAVED AREAS

LUMINAIRE SCHEDULE

TYPE	DESCRIPTION	MANUFACTURER	CATALOG NUMBER	LAMPS		FIXTURE		BALLAST	MOUNTING	REMARKS
				QTY	TYPE	INPUT WATTS	VOLTS			
EF-1	SINGLE ARM POLE MOUNTED FIXTURE WITH TYPE III DISTRIBUTION ON 20' POLE	GARDCO OR APPROVED EQUAL	MA22-1-3-250-277-BLP	23	250W MH	295 W	277 V	ELECTRONIC	POLE	
EF-2	POST TOP FIXTURE WITH TYPE V DISTRIBUTION ON 12' POLE	GARDCO OR APPROVED EQUAL	MP17-1-V-100-277-BLP	26	100W MH	110 W	277 V	ELECTRONIC	POLE	
EF-3A	SINGLE ARM POLE MOUNTED FIXTURE WITH TYPE III DISTRIBUTION ON 25' POLE, POLE: VALMONT STRUCTURES, CATALOG #1908-45-70-5-T-4	LEDTRONICS OR APPROVED EQUAL	SLL002P-3D60W-XPW-004	29	LED FIXTURE	82 W	277 V	ELECTRONIC	POLE	
EF-3B	DOUBLE ARM POLE MOUNTED FIXTURE WITH TYPE III DISTRIBUTION ON 25' POLE, POLE: VALMONT STRUCTURES, CATALOG #1907-45-70-5-T-4	LEDTRONICS OR APPROVED EQUAL	SLL002P-3D60W-XPW-004	31	LED FIXTURE	82 W	277 V	ELECTRONIC	POLE	
EF-4	LIGHT COLUMN PEDESTRIAN, SERIES 500, STAINLESS STEEL SATIN FINISH POWDERCOAT, 360 DEGREE PERFORATED SHIELD	FORMS+SURFACES OR APPROVED EQUAL	LPLCO-512PS	4	F32T8	32 W	277 V	ELECTRONIC	POLE	
EF-5	PLANE STEP LIGHT	IO LIGHTING OR APPROVED EQUAL	SEE NOTE BELOW	9	LED FIXTURE	8 W	277 V	ELECTRONIC	JUNCTION BOX	

NOTES:
PRIOR TO ORDERING LIGHTS, CONTRACTOR SHALL COORDINATE WITH ARCHITECT AND LANDSCAPE ARCHITECT TO VERIFY ADDITIONAL SPECIFICATIONS FOR ALL LIGHT FIXTURES. DECISIONS MUST BE REVIEWED AND APPROVED BY THE COTR.

LIGHT POLE BASE HEIGHT SHALL VARY SO ALL PROPOSED LIGHTS OF SIMILAR TYPE IN PARKING LOT AREA ARE THE SAME HEIGHT.

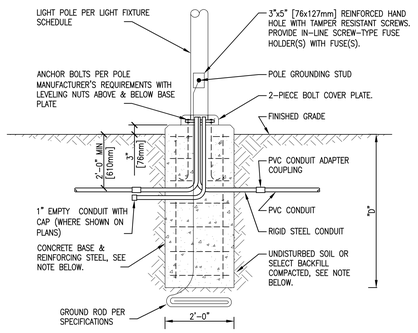

NOTE:

BACKFILL, CONCRETE, REINFORCING STEEL, AND ANCHOR BOLTS ARE SHOWN FOR REFERENCE ONLY. FOUNDATION DEPTHS ARE FOR SITES WITH STIFF COHESIVE CLAY (1.5 TONS/SF). THIS SOIL STRENGTH SHALL BE VEREFIED BY BORING DATA PRIOR TO CONSTRUCTION OR WITH CALCULATIONS FROM A STRUCTURAL ENGINEER HIRED BY THE CONTRACTOR.

MOUNTING HEIGHT	"D" DEPTH OF FOUNDATION	
	SINGLE ARM	DOUBLE ARM
12'	6'	7'
20'	7'	8'
25'	9'	10'

POLE BASE DETAIL

NTS — (TURF AREAS)

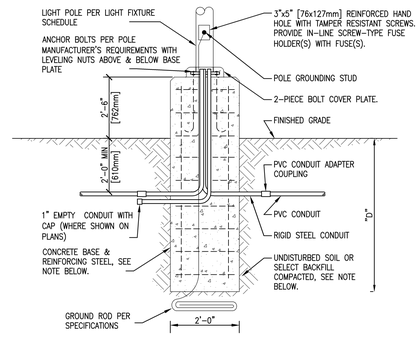

NOTE:

BACKFILL, CONCRETE, REINFORCING STEEL, AND ANCHOR BOLTS ARE SHOWN FOR REFERENCE ONLY. FOUNDATION DEPTHS ARE FOR SITES WITH STIFF COHESIVE CLAY (1.5 TONS/SF). THIS SOIL STRENGTH SHALL BE VEREFIED BY BORING DATA PRIOR TO CONSTRUCTION OR WITH CALCULATIONS FROM A STRUCTURAL ENGINEER HIRED BY THE CONTRACTOR.

MOUNTING HEIGHT	"D" DEPTH OF FOUNDATION	
	SINGLE ARM	DOUBLE ARM
12'	6'	7'
20'	7'	8'
25'	9'	10'

POLE BASE DETAIL

NTS — (PAVED AREAS ADJACENT TO PARKING)

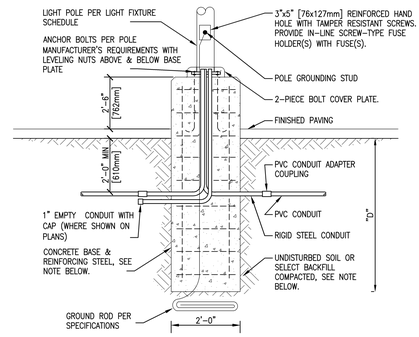

NOTE:

BACKFILL, CONCRETE, REINFORCING STEEL, AND ANCHOR BOLTS ARE SHOWN FOR REFERENCE ONLY. FOUNDATION DEPTHS ARE FOR SITES WITH STIFF COHESIVE CLAY (1.5 TONS/SF). THIS SOIL STRENGTH SHALL BE VEREFIED BY BORING DATA PRIOR TO CONSTRUCTION OR WITH CALCULATIONS FROM A STRUCTURAL ENGINEER HIRED BY THE CONTRACTOR.

MOUNTING HEIGHT	"D" DEPTH OF FOUNDATION	
	SINGLE ARM	DOUBLE ARM
12'	6'	7'
20'	7'	8'
25'	9'	10'

POLE BASE DETAIL

NTS — (PAVED AREAS)

WIRE SIZING TABLE

FOR 208V-20A BRANCH CIRCUITS ONLY (UNLESS NOTED OTHERWISE)

IF DISTANCE (A+B) IN FEET IS: (SEE DIAGRAM AT RIGHT)	USE COPPER WIRE IN CONDUIT, AWG SIZE AS FOLLOWS ON ENTIRE CIRCUIT AND SIZE CONDUIT ACCORDINGLY.	
0' TO 300' 300' TO 450' 450' TO 700' 700' TO 1000'	#10 AWG (MIN.) #8 AWG #6 AWG #4 AWG (MAX.)	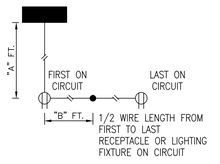

FOR 277V-20A BRANCH CIRCUITS ONLY (UNLESS NOTED OTHERWISE)

IF DISTANCE (A+B) IN FEET IS: (SEE DIAGRAM AT RIGHT)	USE COPPER WIRE IN CONDUIT, AWG SIZE AS FOLLOWS ON ENTIRE CIRCUIT AND SIZE CONDUIT ACCORDINGLY.	
0' TO 250' 250' TO 400' 400' TO 700' 700' TO 1000'	#12 AWG (MIN.) #10 AWG #8 AWG #6 AWG (MAX.)	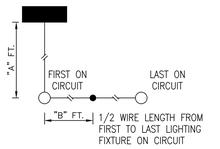

NOTES:
1. TABLES ARE BASED ON EVENLY DISTRIBUTED LOAD ALLOWING A 3% VOLTAGE DROP AT LAST OUTLET.
2. PROVIDE DEDICATED NEUTRAL FOR EACH CIRCUIT.

WIRE SIZING TABLE

NOTE – THE ELECTRICAL CONTRACTOR SHALL BE REQUIRED TO INCLUDE, IN HIS SCOPE AND COST OF WORK, HIRING A QUALIFIED INDEPENDENT (THIRD PARTY) TESTING AGENCY TO PERFORM ELECTRICAL INSPECTION AND TESTING PER NETA ACCEPTANCE TESTING SPECIFICATIONS.

INSPECTION AND TESTS SHALL BE PERFORMED ON NEW EQUIPMENT AND SUB-COMPONENTS INCLUDING:

1. PANELBOARD
2. TRANSFORMERS
3. GROUNDING STEMS

TESTING AGENCY SHALL BE CERTIFIED BY, AND A MEMBER COMPANY OF, THE INTERNATIONAL ELECTRICAL TESTING ASSOCIATION (NETA). CONTRACTOR SHALL BE RESPONSIBLE FOR CORRECTING DEFICIENCIES IDENTIFIED DURING TESTING AND SUBMITTING TEST RESULTS TO ENGINEER FOR APPROVAL. SEE SPECIFICATIONS FOR ADDITIONAL REQUIREMENTS.

CONSTRUCTION DOCUMENTS 04/18/12

Revisions:	Date
Revised Per VA Comments	04/18/12
Construction Amendment 1	05/17/12

CONSULTANTS:

Cowhey Manhard — A MANHARD CONSULTING DIVISION

Jacobs/Ryan Associates Landscape Architects — 1527 North Sandburg Terrace, Chicago, Illinois 60610, (312) 664-3217

EPSTEIN

ARCHITECT / ENGINEER:

TRAFFIC ANALYSIS & DESIGN, INC.

Drawing Title: CONSTRUCTION DETAILS VA STANDARD DETAILS

Approved: Project Director

Project Title: Edward J. Hines Jr. VA Hospital Reconfigure Parking Lots-Phase 4

Location: HINES, ILLINOIS

Date: 03/29/12 — Checked: BJA — Drawn: QDH

Project Number: 578-12-090

Building Number: N/A

Drawing Number: C-807

Dwg. of

Office of Construction and Facilities Management

Department of Veterans Affairs

VA FORM 08-6231