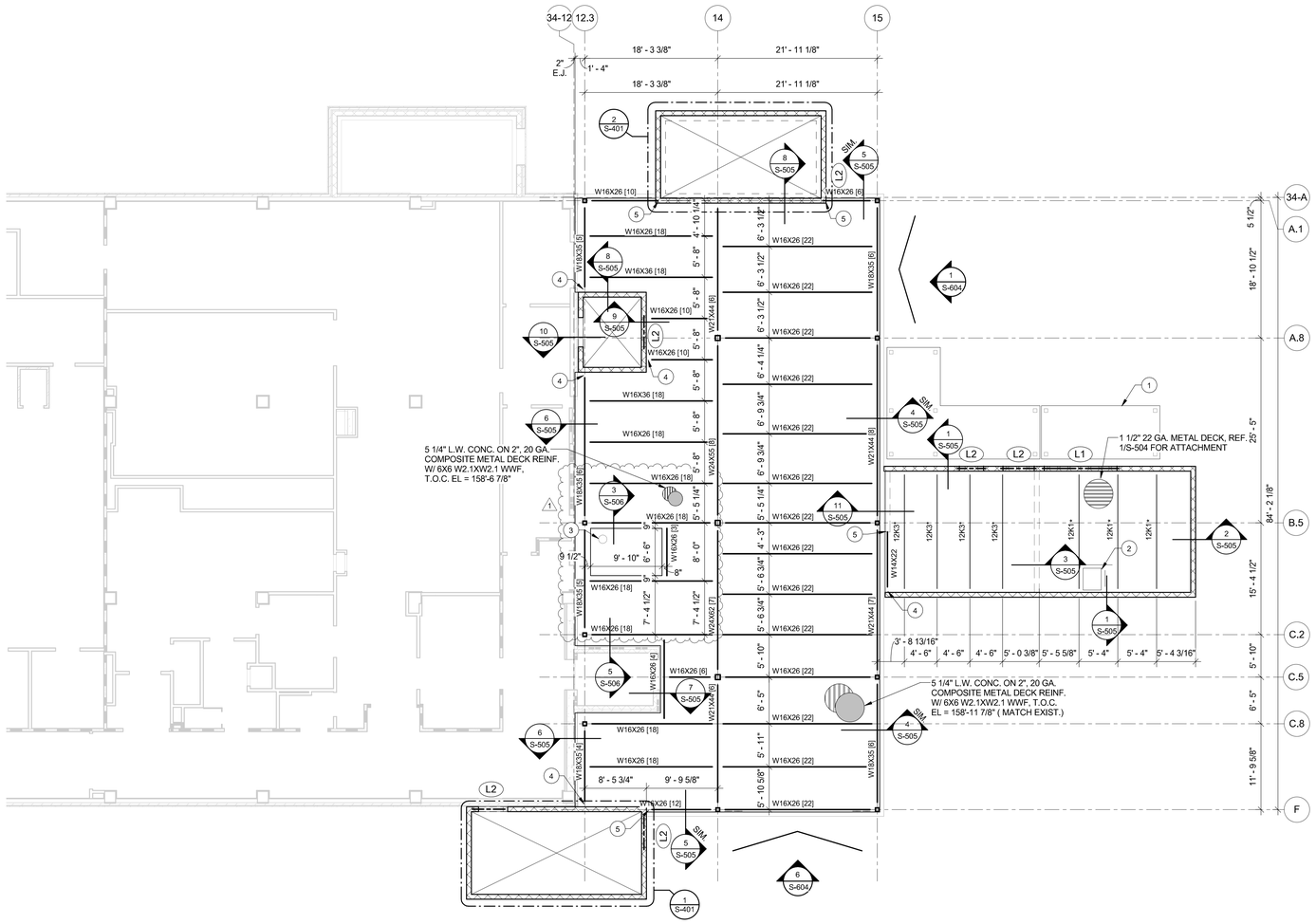


N

1 / S-102 FIRST FLOOR FRAMING PLAN
1/8" = 1'-0"

0' 4' 8' 16'
1/8" = 1'-0"

FRAMING PLAN NOTES:

- SEE SHEETS S-001, S-002 AND S-003 FOR GENERAL STRUCTURAL NOTES AND SPECIAL INSPECTION REQUIREMENTS.
- SEE DETAIL 1/S-504 AND 15/S-504 FOR TYPICAL FLOOR/ROOF OPENINGS. SEE MECHANICAL, ELECTRICAL AND ARCHITECTURAL FOR SIZE AND LOCATION OF OPENINGS NOT NOTED ON FRAMING PLANS. ROOF DRAINS SHALL BE CONSIDERED A ROOF OPENING.
- SEE DETAIL 5/S-504 FOR TYPICAL SPLICE CONNECTION DETAIL AT ALL CONTINUOUS EDGE ANGLES AND BENT PLATES.
- SEE DETAIL 7/S-504 FOR TYPICAL BEAM CONNECTION DETAIL. FRAME STEEL BEAMS INTO STEEL COLUMNS PER DETAIL 10/S-504.
- THE CONTRACTOR SHALL VERIFY ALL DIMENSIONS AND ELEVATIONS OF EXISTING CONSTRUCTION THAT MAY AFFECT THE PROJECT AND REPORT DISCREPANCIES TO THE ENGINEER. ANY DIMENSIONS AND ELEVATIONS THAT IMPACT NEW WORK SHALL BE VERIFIED PRIOR TO FABRICATION OF ANY MATERIAL. EXISTING BUILDING ELEMENTS THAT ARE TO BE ABANDONED THAT INTERFERE WITH NEW CONSTRUCTION SHALL BE REMOVED.
- PROVIDE CONTINUOUS REINF. AT THE TOP OF CMU WALLS AND AT A MAXIMUM OF 4'-0" O.C. IN KNOCKOUT BOND BEAMS, U.N.O..
- SEE DETAIL 12/S-504 FOR COMPOSITE DECK ATTACHMENT DETAIL

PLAN MARKS

- BRACED FRAME, REF. S-604

**BEAM DESIGNATIONS**

W16X31 [36] <0.75>
- POSITIVE MIDSPAN CAMBER
- NUMBER OF HEADED STUDS
- BEAM SIZE

(L#) LINTEL MARK, REF. LIINTEL SCHED. ON SHEET S-802

* INDICATES 5" JOIST SEAT

(1) PRE-ENGINEERED CANOPY BY OTHERS

(2) ROOF HATCH, REF. 2/S-504 FOR FRAMING AROUND OPENING

(3) FLOOR DRAIN, REF. ARCH. AND MECH. FOR LOCATION. REF. 15/S-504 FOR TYP. FLOOR OPENING DETAIL

(4) REF. 9/S-801 FOR BEAM BRG. DETAIL

(5) REF. 10/S-801 FOR BEAM BRG. DETAIL

| No. | Description | Date |
|---|---|---|
| 1 | SPS Revisions | 4-28-2017 |

Revisions:

CONSULTANTS:

--

KRISTY G. HELWICK LICENSED 23887 05/03/2017 KANSAS PROFESSIONAL ENGINEER

ARCHITECT/ENGINEERS:

HFG HEALTH FACILITIES GROUP architecture

PEC

Drawing Title: FIRST FLOOR FRAMING PLAN

SPS REVISIONS

Project Title: STERILE PROCESSING SERVICE (SPS) SURGICAL SUITE EXPANSION, B34

Project Number: 589-754

Location: Robert J. Dole VA Medical Center 5500 E Kellogg, Wichita, KS

Date: 10/31/2016 | Checked: CGH | Drawn: JTR

Drawing Number: S-102 Dwg.

Office of Construction and Facilities Management

Department of Veterans Affairs

VA FORM 08-6231

FRAMING PLAN NOTES:

- SEE SHEETS S-001, S-002 AND S-003 FOR GENERAL STRUCTURAL NOTES AND SPECIAL INSPECTION REQUIREMENTS.
- SEE DETAIL 1/S-504 AND 15/S-504 FOR TYPICAL FLOOR/ROOF OPENINGS. SEE MECHANICAL, ELECTRICAL AND ARCHITECTURAL FOR SIZE AND LOCATION OF OPENINGS NOT NOTED ON FRAMING PLANS. ROOF DRAINS SHALL BE CONSIDERED A ROOF OPENING.
- SEE DETAIL 5/S-504 FOR TYPICAL SPLICE CONNECTION DETAIL AT ALL CONTINUOUS EDGE ANGLES AND BENT PLATES.
- SEE DETAIL 7/S-504 FOR TYPICAL BEAM CONNECTION DETAIL. FRAME STEEL BEAMS INTO STEEL COLUMNS PER DETAIL 10/S-504.
- THE CONTRACTOR SHALL VERIFY ALL DIMENSIONS AND ELEVATIONS OF EXISTING CONSTRUCTION THAT MAY AFFECT THE PROJECT AND REPORT DISCREPANCIES TO THE ENGINEER. ANY DIMENSIONS AND ELEVATIONS THAT IMPACT NEW WORK SHALL BE VERIFIED PRIOR TO FABRICATION OF ANY MATERIAL. EXISTING BUILDING ELEMENTS THAT ARE TO BE ABANDONED THAT INTERFERE WITH NEW CONSTRUCTION SHALL BE REMOVED.
- PROVIDE CONTINUOUS REINF. AT THE TOP OF CMU WALLS AND AT A MAXIMUM OF 4'-0" O.C. IN KNOCKOUT BOND BEAMS, U.N.O..
- SEE DETAIL 12/S-504 FOR COMPOSITE DECK ATTACHMENT DETAIL

PLAN MARKS

- BRACED FRAME, REF. S-604

**BEAM DESIGNATIONS**

W16X31 [36] <0.75>

- POSITIVE MIDSPAN CAMBER
- NUMBER OF HEADED STUDS
- BEAM SIZE

(L#) LINTEL MARK, REF. LIINTEL SCHED. ON SHEET S-802

* INDICATES 5" JOIST SEAT

(1) PRE-ENGINEERED CANOPY BY OTHERS

(2) ROOF HATCH, REF. 2/S-504 FOR FRAMING AROUND OPENING

(3) FLOOR DRAIN, REF. ARCH. AND MECH. FOR LOCATION. REF. 15/S-504 FOR TYP. FLOOR OPENING DETAIL

(4) REF. 9/S-801 FOR BEAM BRG. DETAIL

(5) REF. 10/S-801 FOR BEAM BRG. DETAIL

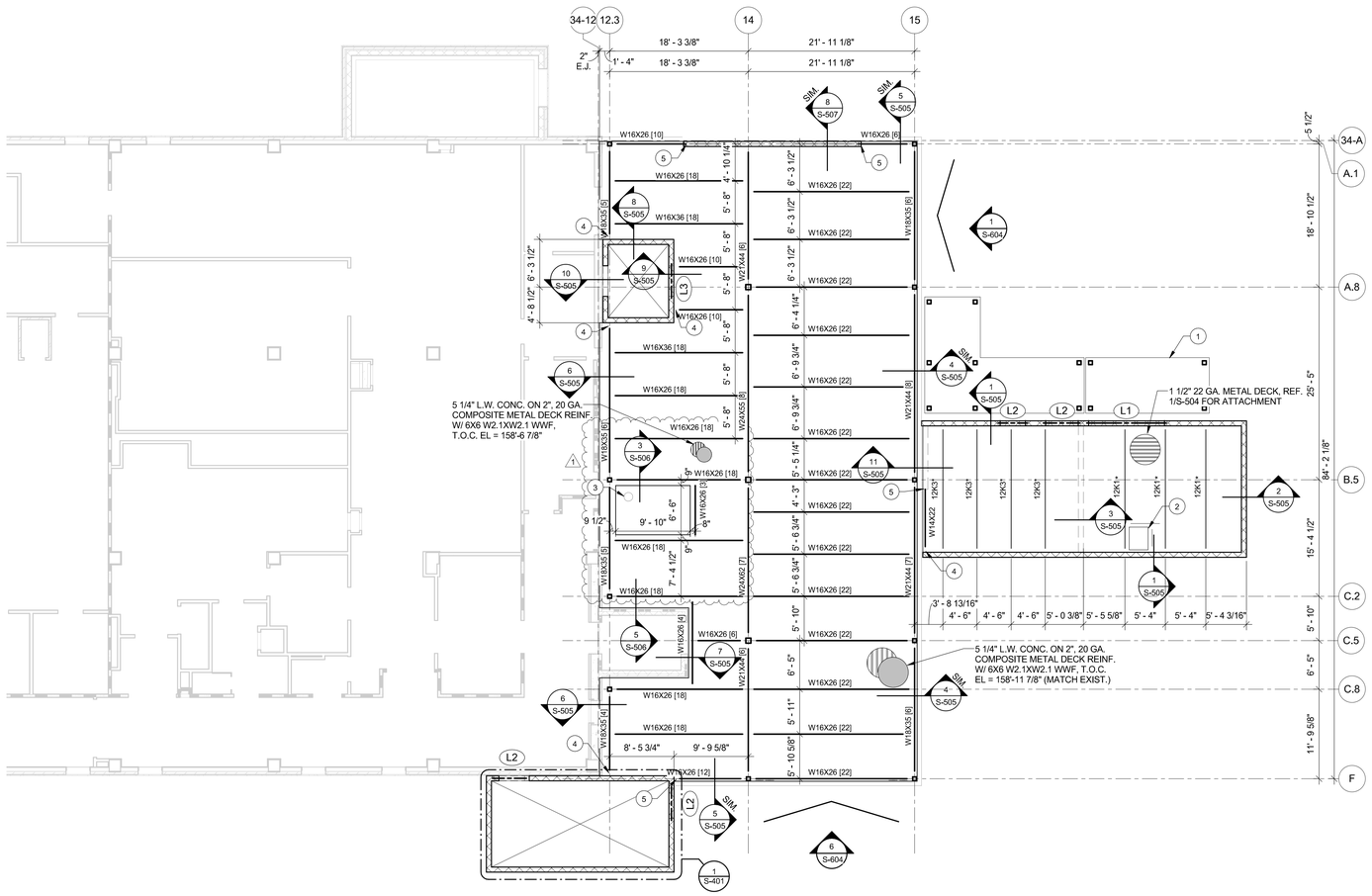


N

(1) FIRST FLOOR FRAMING PLAN - BID ITEM 5 (S-102.5)
1/8" = 1'-0"

| No. | Description | Date |
|---|---|---|
| 1 | SPS Revisions | 4-28-2017 |

Revisions:

CONSULTANTS:

--

CRISTY G. HELWICK LICENSED 23887 5/03/2017 KANSAS PROFESSIONAL ENGINEER

ARCHITECT/ENGINEERS:

HFG HEALTH FACILITIES GROUP architecture

PEC

Drawing Title: FIRST FLOOR FRAMING PLAN - BID ITEM 5

SPS REVISIONS

Project Title: STERILE PROCESSING SERVICE (SPS) SURGICAL SUITE EXPANSION, B34

Project Number: 589-754

Location: Robert J. Dole VA Medical Center 5500 E Kellogg, Wichita, KS

Date: 10/31/2016 | Checked: CGH | Drawn: JTR

Drawing Number: S-102.5 Dwg.

Office of Construction and Facilities Management

Department of Veterans Affairs

VA FORM 08-6231

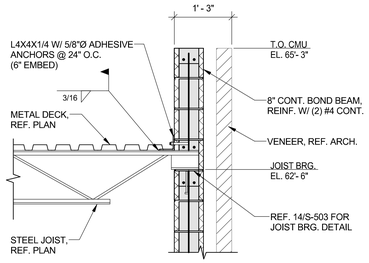


1 S-505 FRAMING SECTION
3/4" = 1'-0"

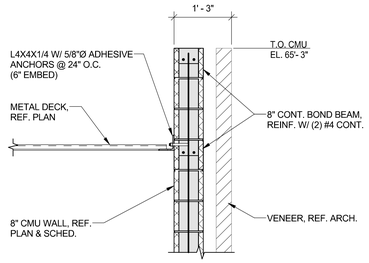


2 S-505 FRAMING SECTION
3/4" = 1'-0"

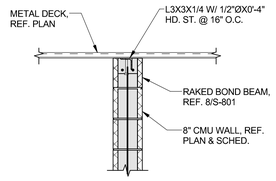


3 S-505 FRAMING SECTION
3/4" = 1'-0"

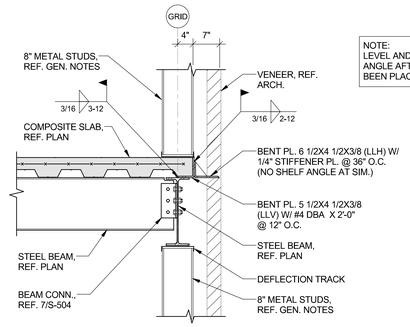


NOTE:
LEVEL AND ATTACH BRICK SHELF ANGLE AFTER CONC. SLAB HAS BEEN PLACED AND CURED

4 S-505 FRAMING SECTION
3/4" = 1'-0"

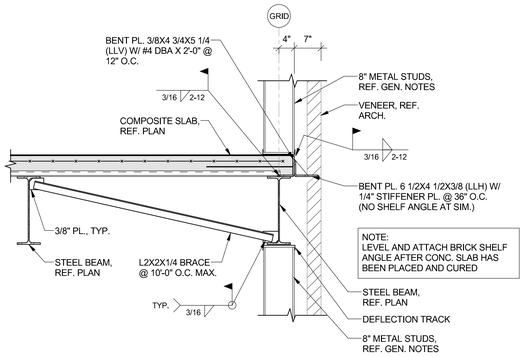


NOTE:
LEVEL AND ATTACH BRICK SHELF ANGLE AFTER CONC. SLAB HAS BEEN PLACED AND CURED

5 S-505 FRAMING SECTION
3/4" = 1'-0"

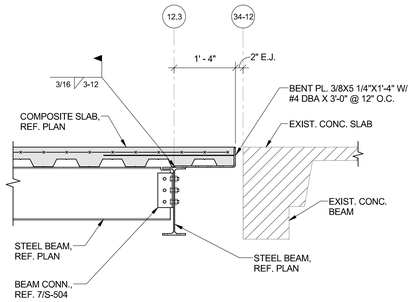


6 S-505 FRAMING SECTION
3/4" = 1'-0"

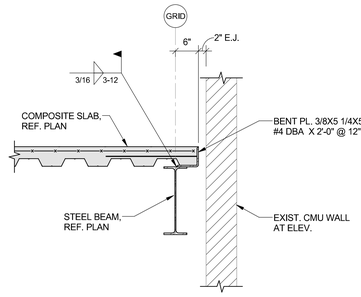


7 S-505 FRAMING SECTION
3/4" = 1'-0"

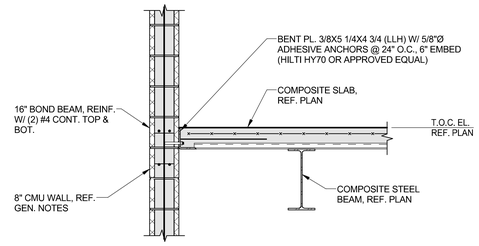


8 S-505 FRAMING SECTION
3/4" = 1'-0"

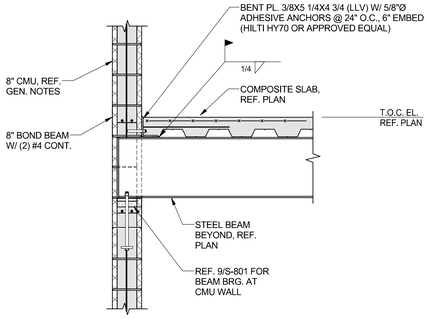


9 S-505 FRAMING SECTION
3/4" = 1'-0"

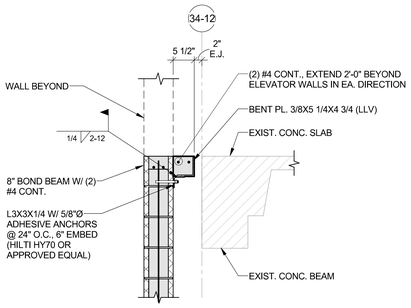


10 S-505 FRAMING SECTION
3/4" = 1'-0"

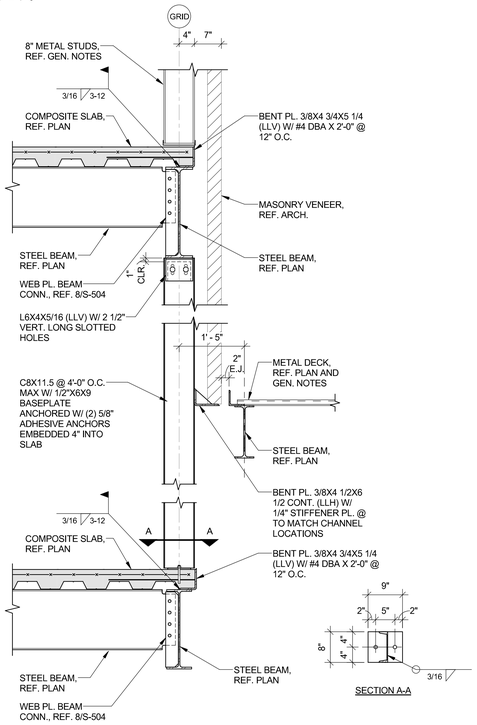


11 S-505 FRAMING SECTION
3/4" = 1'-0"

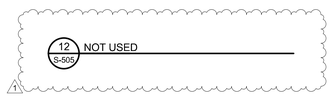

12 S-505 NOT USED

| No. | Description | Date |
|---|---|---|
| 1 | SPS Revisions | 4-28-2017 |

Revisions:

CONSULTANTS:

--

CRISTY G. HELWICK LICENSED 23587 05/03/2017 KANSAS PROFESSIONAL ENGINEER

ARCHITECT/ENGINEERS:

HFG | HEALTH FACILITIES GROUP architecture

PEC

Drawing Title
**FRAMING DETAILS**

**SPS REVISIONS**

Project Title
STERILE PROCESSING SERVICE (SPS) SURGICAL SUITE EXPANSION, B34

Project Number
**589-754**

Location
Robert J. Dole VA Medical Center 5500 E Kellogg, Wichita, KS

Date **10/31/2016** | Checked **CGH** | Drawn **JTR**

Drawing Number
S-505
Dwg.

Office of Construction and Facilities Management

Department of Veterans Affairs

VA FORM 08-6231