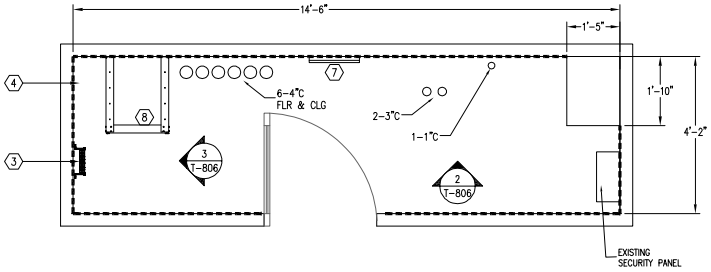

1 / T-806 TR B310 – ENLARGED PLAN
SCALE: 3/4"=1'-0"

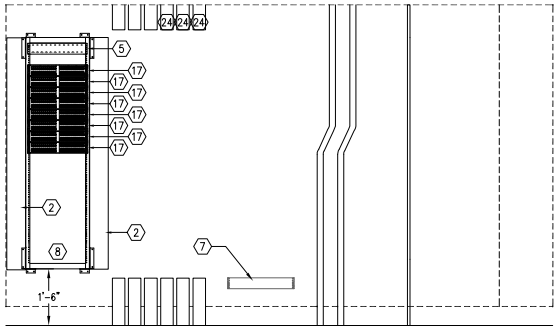

2 / T-806 TR B310 – NORTH WALL ELEVATION
SCALE: 3/4"=1'-0"

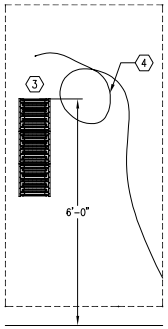

3 / T-806 TR B310 – WEST WALL EELVATION
SCALE: 3/4"=1'-0"

GENERAL NOTES

1. ALL MATERIALS SHALL BE CONTRACTOR FURNISHED AND INSTALLED UNLESS OTHERWISE SPECIFICALLY NOTED.
2. ALL LAN/DATA NETWORK ELECTRONICS SHALL BE OWNER FURNISHED AND INSTALLED.
3. RACK ELEVATIONS ARE SHOWN POPULATED TO PROJECTED MAXIMUM CAPACITY. CONTRACTOR SHALL POPULATE RACKS AS REQUIRED TO FULFILL DROP COUNT REQUIREMENTS AS INDICATED ON PLANS PLUS ONE (1) SPARE PANEL PER RACK.
4. ALL PATCH CABLES SHALL BE FURNISHED AND INSTALLED BY DIVISION 27.
5. ALL CROSS-CONNECT WIRING SHALL BE OWNER FURNISHED AND INSTALLED.
6. ALL OPTICAL FIBER JUMPERS SHALL BE FURNISHED BY DIVISION 27 IN QUANTITIES IDENTIFIED IN SPECS AND INSTALLED BY THE OWNER.

CODED NOTES

2. NEW 8"W X 74"H VERTICAL CABLE MANAGEMENT SECTION, BLACK IN COLOR.
3. NEW 300-PAIR 110 STYLE TERMINATION BLOCKS AS REQUIRED TO POPULATE FRAME FOR NEW COPPER CABLING, AS PER CABLE SCHEDULE, SHEET T-508. EXACT ARRANGEMENT OF BLOCKS SHALL BE COORDINATED WITH THE OWNER IN THE FIELD.
4. PROVIDE 15' SERVICE LOOP FOR INCOMING COPPER AND FIBER SERVICES.
5. PHASE 1 (NOT-IN-CONTRACT) RACK MOUNT FIBER TERMINATION HOUSING WITH CONNECTOR PANELS FOR BACKBONE FIBER.
7. EXISTING TELECOMMUNICATIONS GROUNDING BUSBAR.
8. PHASE 1 (NOT-IN-CONTRACT) 19"W x 74"H x 24"D WALL MOUNT OPEN FRAME EQUIPMENT RACK, BLACK IN COLOR.
17. NEW CATEGORY 6A COPPER PATCH PANEL, 48-PORT.
22. PHASE 1 (NOT-IN-CONTRACT) COPPER SPLICE ENCLOSURE WITH MULTI-PAIR SPLICE MODULES.
23. PHASE 1 (NOT-IN-CONTRACT) RACK MOUNT FIBER SPLICE HOUSING.
24. PHASE 1 (NOT-IN-CONTRACT) CUTBACK (3) EXISTING 4" CONDUITS AND RELOCATE WITH UNISTRUT BRACING TO TOP EDGE OF PLYWOOD BACKBOARD.
25. PHASE 1 (NOT-IN-CONTRACT) CUTBACK (4) EXISTING 4" CONDUITS AND RELOCATE WITH UNISTRUT BRACING TO TOP EDGE OF PLYWOOD BACKBOARD.

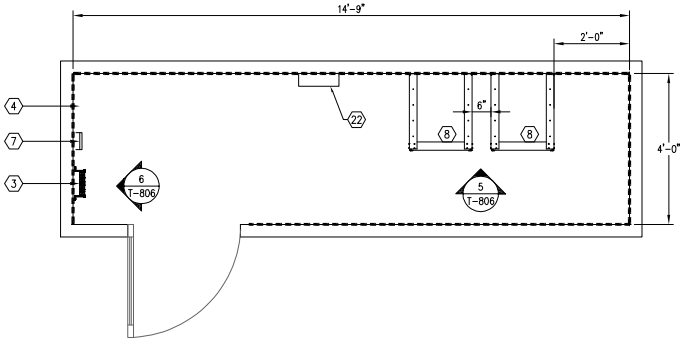

4 / T-806 TR B432A – ENLARGED PLAN
SCALE: 3/4"=1'-0"

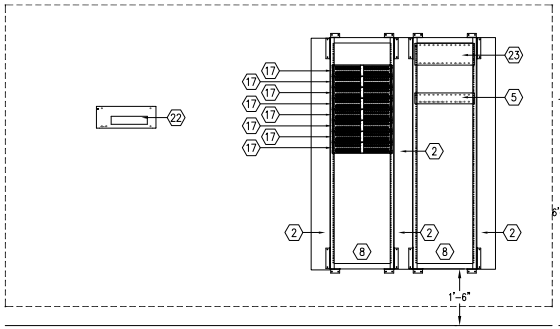

5 / T-806 TR B432A – NORTH WALL ELEVATION
SCALE: 3/4"=1'-0"

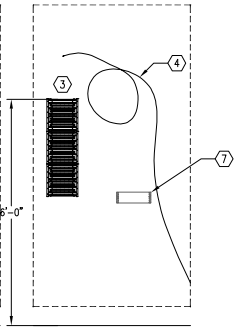

6 / T-806 TR B432A – WEST WALL ELEVATION
SCALE: 3/4"=1'-0"

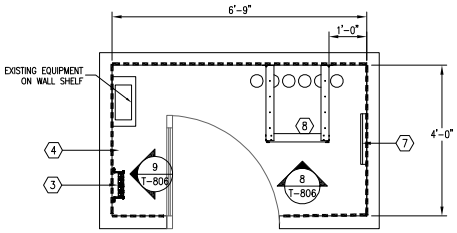

7 / T-806 TR B525 – ENLARGED PLAN
SCALE: 3/4"=1'-0"

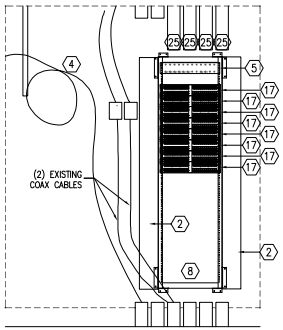

8 / T-806 TR B525 – NORTH WALL ELEVATION
SCALE: 3/4"=1'-0"

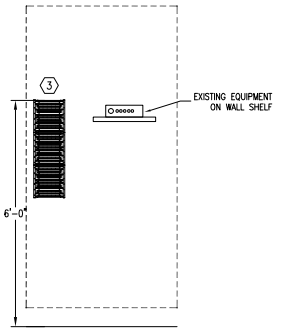

9 / T-806 TR B525 – WEST WALL ELEVATION
SCALE: 3/4"=1'-0"

DiClemente Siegel Design Inc.
Engineering and Architecture
28905 Greenfield Rd. Southfield, MI 48076-3048
Voice: 248.569.5400 Fax: 248.569.8086
Email: mail@dsdesinc.com
Website: http://www.dsdesinc.com

VA MEDICAL CENTER
IT INFRASTRUCTURE UPGRADE - PHASE II
ANN ARBOR, MICHIGAN

SEXTANT
730 RIVER AVENUE
PITTSBURGH, PA 15212
412-323-8560
ATLANTA
NEW YORK
PHOENIX
WASHINGTON, DC
AV - IT - SECURITY - ACOUSTICS

BICSI
Nick DiClemente
Regis. No. 1202270
EXPIRES 10-01-12
PROFESSIONAL CERTIFICATIONS CORPORATION

TELECOMMUNICATIONS ENLARGED PLANS

© 2010 DiClemente Siegel Design Inc.

These documents and instruments of service are and shall remain the property of the architect, DSD and DSD's consultants, shall be deemed the author and owner of said documents and instruments of service and shall retain all common law, statutory and other reserved rights, including the copyright. DSD grants to the owner a nonexclusive license to reproduce DSD's instruments of service solely for the purposes of constructing, using and maintaining the project.

These documents are incomplete and/or additional data and specification documents that are not intended to be used by the contractor are shop drawings, final dimensions, equipment spaces, routing, miscellaneous fittings, final installation and coordination is the contractor's responsibility.

ISSUED FOR	DATE
50% OWNER REVIEW	07/29/11
90% OWNER REVIEW	08/26/11
FINAL OWNER REVIEW	09/21/11
BIDS	10/21/11

DRAWN:	TK/SH
PM / PIC:	SH/PD
CHECKED:	PD
ACADFILE:	
PROJECT No.	2100

T-806