DOOR AND FRAME GENERAL NOTES

1. IF APPLICABLE, REFER TO STRUCTURAL, MECHANICAL, ELECTRICAL, AND PLUMBING DOCUMENTS FOR ADDITIONAL DEMOLITION INFORMATION.
2. COMPLY WITH ALL APPLICABLE LOCAL, STATE AND FEDERAL CODES AND REGULATIONS. ALWAYS ABIDE BY THE MOST RESTRICTIVE CODE.
3. ALL HOLLOW METAL DOORS AND FRAMES SHALL BE FACTORY PRIMED AND RECEIVE PAINT FINISH ON SITE AND GROUTED SOLID WHERE APPLICABLE.
4. ALL DOORS ARE 1 3/4" THICK UNLESS NOTED OTHERWISE.
5. PAINT ALL HOLLOW METAL DOORS AND FRAMES PT-6 UNLESS NOTED OTHERWISE

GLAZING GENERAL NOTES

A. ALL GLAZING IS TYPE "GL-3" UNLESS NOTED BELOW:
B. TEMPER ALL GLAZING WITHIN 60 INCHES OF FINISH FLOOR AND WITHIN 24 INCHES HORIZONTALLY OF DOOR.
C. TEMPER ALL GLAZING WITHIN DOORS.
D. TEMPER PANE IF THE AREA IS GREATER THAN 9 SF.
E. PROVIDE TEMPERED GLAZING WHERE REQUIRED PER CODE.

GLAZING LEGEND

GL-1	LOW-E IGU - EXTERIOR WINDOWS
GL-2	SPANDREL IGU - EXTERIOR SPANDREL WINDOWS
GL-3	CLEAR INTERIOR
GL-4	CLEAR INTERIOR SAFETY GLASS

DOOR SCHEDULE

DOOR	ROOM		DIMENSIONS			DOOR			FRAME			DETAILS			GLAZING	FIRE RATING	HARDWARE SET	COMMENTS
	NUMBER	NAME	WIDTH	HEIGHT	THICKNESS	TYPE	MATERIAL	FINISH	TYPE	MATERIAL	FINISH	HEAD	JAMB	SILL				
1A202	1A202	CORRIDOR	3' - 6"	7' - 0"	1 3/4"	D2	WD	STAINED	F1	HM	PT	1/AS601	2/AS601	--	GL-3		SH-3C	
1A204	1A204	WORK AREA	4' - 0"	7' - 0"								--	--	--				CASED OPENING
1A206	1A202	CORRIDOR	3' - 6"	7' - 0"	1 3/4"	D1	WD	STAINED	F1	HM	PT	1/AS601	2/AS601	--			SH-3A	
1A207A	1A207	CORRIDOR	3' - 6"	7' - 0"	1 3/4"	D1	WD	STAINED	F1	HM	PT	1/AS601	2/AS601	--			SH-3A	
1A207B	1A207	CORRIDOR	3' - 6"	7' - 0"	1 3/4"	D5	WD	STAINED	F!	HM	PT	1/AS601	2/AS601	--	GL-4	90 MIN	HW-1A	
1A210	1A210	SOILED	3' - 0"	7' - 0"	1 3/4"	D1	WD	STAINED	F1	HM	PT	1/AS601	2/AS601	--			5A	
1A212	1A212	PROCEDURE	3' - 6"	7' - 0"	1 3/4"	D1	WD	STAINED	F1	HM	PT	1/AS601	2/AS601	--			3A	
1A213	1A213	EXAM	3' - 6"	7' - 0"	1 3/4"	D1	WD	STAINED	F1	HM	PT	1/AS601	2/AS601	--			3A	
1A214	1A214	DIAB EDUC	3' - 6"	7' - 0"	1 3/4"	D1	WD	STAINED	F1	HM	PT	1/AS601	2/AS601	--			3A	
1A215	1A215	EXAM	3' - 6"	7' - 0"	1 3/4"	D1	WD	STAINED	F1	HM	PT	1/AS601	2/AS601	--			3A	
1A216	1A216	EXAM	3' - 6"	7' - 0"	1 3/4"	D1	WD	STAINED	F1	HM	PT	1/AS601	2/AS601	--			3A	
1A218	1A218	DIAB EDUC	3' - 6"	7' - 0"	1 3/4"	D1	WD	STAINED	F1	HM	PT	1/AS601	2/AS601	--			3A	
1A219	1A219	EXAM	3' - 6"	7' - 0"	1 3/4"	D1	WD	STAINED	F1	HM	PT	1/AS601	2/AS601	--			3A	
1A220	1A220	EXAM	3' - 6"	7' - 0"	1 3/4"	D1	WD	STAINED	F1	HM	PT	1/AS601	2/AS601	--			3A	
1A221	1A221	EXAM	3' - 6"	7' - 0"	1 3/4"	D1	WD	STAINED	F1	HM	PT	1/AS601	2/AS601	--			3A	
1A222	1A222	OFFICE	3' - 0"	7' - 0"	1 3/4"	D1	WD	STAINED	F1	HM	PT	1/AS601	2/AS601	--			3D	
1A223	1A223	EXAM	3' - 6"	7' - 0"	1 3/4"	D1	WD	STAINED	F1	HM	PT	1/AS601	2/AS601	--			3A	
1A224	1A224	MED	3' - 0"	7' - 0"	1 3/4"	D1	WD	STAINED	F1	HM	PT	1/AS601	2/AS601	--		90 MIN	SH-3D	
1A226	1A226	EXAM	3' - 6"	7' - 0"	1 3/4"	D1	WD	STAINED	F1	HM	PT	1/AS601	2/AS601	--			3A	
1A227	1A227	TRIAGE	3' - 6"	7' - 0"	1 3/4"	D1	WD	STAINED	F1	HM	PT	1/AS601	2/AS601	--			3A	
1A228	1A228	EXAM	3' - 6"	7' - 0"	1 3/4"	D1	WD	STAINED	F1	HM	PT	1/AS601	2/AS601	--			3A	
1A229	1A229	TRIAGE	3' - 6"	7' - 0"	1 3/4"	D1	WD	STAINED	F1	HM	PT	1/AS601	2/AS601	--			3A	
1A334	1A334	OFFICE	3' - 0"	7' - 0"	1 3/4"	D1	WD	STAINED	F1	HM	PT	1/AS601	2/AS601	--			3	
1A400	1A400	LOUNGE	3' - 0"	7' - 0"	1 3/4"	D1	WD	STAINED	F1	HM	PT	1/AS601	2/AS601	--			SH-3E	
1A401	1A023	VESTIBULE	3' - 0"	7' - 0"	1 3/4"	D1	WD	STAINED	F1	HM	PT	1/AS601	2/AS601	--			SH-3A	
1A402	1A401	CORRIDOR	3' - 0"	7' - 0"	1 3/4"	D1	WD	STAINED	F1	HM	PT	1/AS601	2/AS601	--			SH-6	
1A403	1A404	VESTIBULE	6' - 0"	7' - 0"		D3	ALUM	ANOD	SF2	ALUM	ANOD	--	--	--	GL-1		SH-12	
1A404	1A404	VESTIBULE	6' - 0"	7' - 0"		D3	ALUM	ANOD	SF1	ALUM	ANOD	12/AS511	11/AS501	--	GL-1		SH-10	
1A405	1A405	CORRIDOR	3' - 0"	7' - 0"	1 3/4"	D1	WD	STAINED	F1	HM	PT	1/AS601	2/AS601	--			SH-3A	
1A406	1A406	CORRIDOR	3' - 0"	7' - 0"	1 3/4"	D1	WD	STAINED	F1	HM	PT	1/AS601	2/AS601	--			SH-3A	
1A409	1A563	CORRIDOR	3' - 0"	7' - 0"	1 3/4"	D1	WD	STAINED	F1	HM	PT	1/AS601	2/AS601	--			SH-6	
1A410	1A563	CORRIDOR	3' - 0"	7' - 0"	1 3/4"	D1	WD	STAINED	F1	HM	PT	1/AS601	2/AS601	--			SH-6	
1A451	1A451	TOILET	3' - 0"	7' - 0"	1 3/4"	D1	WD	STAINED	F1	HM	PT	1/AS601	2/AS601	--			2	
1A452	1A452	TOILET	3' - 0"	7' - 0"	1 3/4"	D1	WD	STAINED	F1	HM	PT	1/AS601	2/AS601	--			2	
1A453	1A453	TOILET	3' - 0"	7' - 0"	1 3/4"	D1	WD	STAINED	F1	HM	PT	1/AS601	2/AS601	--			2	
1A454	1A454	TOILET	3' - 0"	7' - 0"	1 3/4"	D1	WD	STAINED	F1	HM	PT	1/AS601	2/AS601	--			2A	
1A455	1A455	ELEC	3' - 0"	7' - 0"	1 3/4"	D1	WD	STAINED	F1	HM	PT	1/AS601	2/AS601	--			5C	
1A456	1A456	JAN	3' - 0"	7' - 0"	1 3/4"	D1	WD	STAINED	F1	HM	PT	1/AS601	2/AS601	--			5A	
1A457	1A457	TELECOM	3' - 0"	7' - 0"	1 3/4"	D1	WD	STAINED	F1	HM	PT	1/AS601	2/AS601	--			SH-3D	
1A458	1A458	TOILET	3' - 0"	7' - 0"	1 3/4"	D1	WD	STAINED	F1	HM	PT	3/AS601	4/AS601	--			MH 2	
1A459	1A459	ELEC	3' - 6"	7' - 0"	1 3/4"	D1	WD	STAINED	F1	HM	PT	1/AS601	2/AS601	--			SH-3	
1A460	1A460	MECH	3' - 6"	7' - 0"	1 3/4"	D1	WD	STAINED	F1	HM	PT	1/AS601	2/AS601	--			SH-3	
1A501	1A501	OFFICE	3' - 0"	7' - 0"	1 3/4"	D1	WD	STAINED	F1	HM	PT	1/AS601	2/AS601	--			3	
1A502	1A502	CONSULT	3' - 6"	7' - 0"	1 3/4"	D1	WD	STAINED	F1	HM	PT	1/AS601	2/AS601	--			3C	
1A503	1A503	CONSULT	3' - 6"	7' - 0"	1 3/4"	D1	WD	STAINED	F1	HM	PT	1/AS601	2/AS601	--			3C	
1A504	1A504	CONSULT	3' - 6"	7' - 0"	1 3/4"	D1	WD	STAINED	F1	HM	PT	1/AS601	2/AS601	--			3C	
1A505	1A505	CONSULT	3' - 6"	7' - 0"	1 3/4"	D1	WD	STAINED	F1	HM	PT	1/AS601	2/AS601	--			3C	
1A506	1A506	CONSULT	3' - 6"	7' - 0"	1 3/4"	D1	WD	STAINED	F1	HM	PT	1/AS601	2/AS601	--			3C	
1A507	1A507	CONSULT	3' - 6"	7' - 0"	1 3/4"	D1	WD	STAINED	F1	HM	PT	1/AS601	2/AS601	--			3C	
1A508	1A508	CONSULT	3' - 6"	7' - 0"	1 3/4"	D1	WD	STAINED	F1	HM	PT	1/AS601	2/AS601	--			3C	
1A509	1A509	CONSULT	3' - 0"	7' - 0"	1 3/4"	D1	WD	STAINED	F1	HM	PT	1/AS601	2/AS601	--			3	
1A510	1A510	QUIET	3' - 0"	7' - 0"	1 3/4"	D2	WD	STAINED	F1	HM	PT	3/AS601	4/AS601	--	GL-3		MH 1	
1A511	1A511	CONSULT	3' - 0"	7' - 0"	1 3/4"	D1	WD	STAINED	F1	HM	PT	1/AS601	2/AS601	--			3	
1A512	1A512	QUIET	3' - 0"	7' - 0"	1 3/4"	D2	WD	STAINED	F1	HM	PT	3/AS601	4/AS601	--	GL-3		MH 1	
1A513	1A513	CONSULT	3' - 0"	7' - 0"	1 3/4"	D1	WD	STAINED	F1	HM	PT	1/AS601	2/AS601	--			3	
1A514	1A514	QUIET	3' - 0"	7' - 0"	1 3/4"	D2	WD	STAINED	F1	HM	PT	3/AS601	4/AS601	--	GL-3		MH 1	
1A515	1A515	CONSULT	3' - 0"	7' - 0"	1 3/4"	D1	WD	STAINED	F1	HM	PT	1/AS601	2/AS601	--			3	
1A516	1A516	MED	3' - 0"	7' - 0"	1 3/4"	D1	WD	STAINED	F1	HM	PT	1/AS601	2/AS601	--			SH-3B	
1A517	1A517	CONSULT	3' - 0"	7' - 0"	1 3/4"	D1	WD	STAINED	F1	HM	PT	1/AS601	2/AS601	--			3	
1A518	1A518	OFFICE	3' - 0"	7' - 0"	1 3/4"	D1	WD	STAINED	F1	HM	PT	1/AS601	2/AS601	--			3	
1A519	1A519	OFFICE	3' - 0"	7' - 0"	1 3/4"	D1	WD	STAINED	F1	HM	PT	1/AS601	2/AS601	--			3	
1A520	1A520	OFFICE	3' - 0"	7' - 0"	1 3/4"	D1	WD	STAINED	F1	HM	PT	1/AS601	2/AS601	--			3	
1A521	1A521	OFFICE	3' - 0"	7' - 0"	1 3/4"	D1	WD	STAINED	F1	HM	PT	1/AS601	2/AS601	--			3	
1A522	1A522	OFFICE	3' - 0"	7' - 0"	1 3/4"	D1	WD	STAINED	F1	HM	PT	1/AS601	2/AS601	--			3	
1A524	1A524	OFFICE	3' - 0"	7' - 0"	1 3/4"	D1	WD	STAINED	F1	HM	PT	1/AS601	2/AS601	--			3	
1A525	1A525	OFFICE	3' - 0"	7' - 0"	1 3/4"	D1	WD	STAINED	F1	HM	PT	1/AS601	2/AS601	--			3	
1A526	1A526	OFFICE	3' - 0"	7' - 0"	1 3/4"	D1	WD	STAINED	F1	HM	PT	1/AS601	2/AS601	--			3	
1A527	1A527	OFFICE	3' - 0"	7' - 0"	1 3/4"	D1	WD	STAINED	F1	HM	PT	1/AS601	2/AS601	--			3	
1A528	1A528	OFFICE	3' - 0"	7' - 0"	1 3/4"	D1	WD	STAINED	F1	HM	PT	1/AS601	2/AS601	--			3	
1A529	1A529	OFFICE	3' - 0"	7' - 0"	1 3/4"	D1	WD	STAINED	F1	HM	PT	1/AS601	2/AS601	--			3	
1A531	1A531	CONSULT	3' - 6"	7' - 0"	1 3/4"	D1	WD	STAINED	F1	HM	PT	1/AS601	2/AS601	--			3C	
1A532	1A532	CONSULT	3' - 6"	7' - 0"	1 3/4"	D1	WD	STAINED	F1	HM	PT	1/AS601	2/AS601	--			3C	
1A533	1A533	CONSULT	3' - 6"	7' - 0"	1 3/4"	D1	WD	STAINED	F1	HM	PT	1/AS601	2/AS601	--			3C	
1A534	1A534	CONSULT	3' - 6"	7' - 0"	1 3/4"	D1	WD	STAINED	F1	HM	PT	1/AS601	2/AS601	--			3C	
1A535	1A535	CONSULT	3' - 6"	7' - 0"	1 3/4"	D1	WD	STAINED	F1	HM	PT	1/AS601	2/AS601	--			3C	
1A536	1A536	CONSULT	3' - 6"	7' - 0"	1 3/4"	D1	WD	STAINED	F1	HM	PT	1/AS601	2/AS601	--			3C	
1A537	1A537	CONSULT	3' - 6"	7' - 0"	1 3/4"	D1	WD	STAINED	F1	HM	PT	1/AS601	2/AS601	--			3C	
1A538	1A538	CONSULT	3' - 6"	7' - 0"	1 3/4"	D1	WD	STAINED	F1	HM	PT	1/AS601	2/AS601	--			3C	
1A539	1A539	CONSULT	3' - 6"	7' - 0"	1 3/4"	D1	WD	STAINED	F1	HM	PT	1/AS601	2/AS601	--			3C	
1A540	1A540	CONSULT	3' - 6"	7' - 0"	1 3/4"	D1	WD	STAINED	F1	HM	PT	1/AS601	2/AS601	--			3C	
1A541	1A541	SOILED	3' - 0"	7' - 0"	1 3/4"	D1	WD	STAINED	F1	HM	PT	1/AS601	2/AS601	--			5B	
1A542	1A542	OFFICE	3' - 0"	7' - 0"	1 3/4"	D1	WD	STAINED	F1	HM	PT	1/AS601	2/AS601	--			3	
1A543	1A543	CONSULT	3' - 6"	7' - 0"	1 3/4"	D1	WD	STAINED	F1	HM	PT	1/AS601	2/AS601	--			3C	
1A544	1A544	CONSULT	3' - 6"	7' - 0"	1 3/4"	D1	WD	STAINED	F1	HM	PT	1/AS601	2/AS601	--			3C	
1A545	1A545	CONSULT	3' - 6"	7' - 0"	1 3/4"	D1	WD	STAINED	F1	HM	PT	1/AS601	2/AS601	--			3C	
1A546	1A546	CONSULT	3' - 6"	7' - 0"	1 3/4"	D1	WD	STAINED	F1	HM	PT	1/AS601	2/AS601	--			3C	
1A547	1A547	CONSULT	3' - 6"	7' - 0"	1 3/4"	D1	WD	STAINED	F1	HM	PT	1/AS601	2/AS601	--			3C	
1A548	1A548	CONSULT	3' - 6"	7' - 0"	1 3/4"	D1	WD	STAINED	F1	HM	PT	1/AS601	2/AS601	--			3C	
1A549	1A549	OFFICE	3' - 0"	7' - 0"	1 3/4"	D1	WD	STAINED	F1	HM	PT	1/AS601	2/AS601	--			3	
1A550	1A550	OFFICE	3' - 0"	7' - 0"	1 3/4"	D1	WD	STAINED	F1	HM	PT	1/AS601	2/AS601	--			3	
1A560	1A560	WAITING	12' - 0"	7' - 6"		D4	ALUM	ANOD	SF3	ALUM	ANOD	--	--	--	GL-3		7	
1A561A	1A561	GROUP	3' - 6"	7' - 0"	1 3/4"	D1	WD	STAINED	F1	HM	PT	1/AS601	2/AS601	--			5	
1A564	1A407	CORRIDOR	3' - 0"	7' - 0"	1 3/4"	D1	WD	STAINED	F1	HM	PT	1/AS601	2/AS601	--			SH-6	
1A565	1A565	GROUP	3' - 6"	7' - 0"	1 3/4"	D1	WD	STAINED	F1	HM	PT	1/AS601	2/AS601	--			5	
1A566	1A566	GROUP	3' - 6"	7' - 0"	1 3/4"	D1	WD	STAINED	F1	HM	PT	1/AS601	2/AS601	--			5	
1A567	1A567	GROUP	3' - 6"	7' - 0"	1 3/4"	D1	WD	STAINED	F1	HM	PT	1/AS601	2/AS601	--			5	
1A568	1A568	GROUP	3' - 6"	7' - 0"	1 3/4"	D1	WD	STAINED	F1	HM	PT	1/AS601	2/AS601	--			5	
3S001R	1A023	VESTIBULE	6' - 0"	6' - 0"	1 1/2"	D1	HM	PAINTED	F2	HM	PT	8/AS511	9/AS502	7/AS511			E8	DOOR AND FRAME TO BE PAINTED SW7027 TO MATCH HPC-1
T01	1A023	VESTIBULE	3' - 0"	7' - 0"	1 3/4"	D1	WD	NONE	F1	HM	NONE	1/AS601	2/AS601	--			3B	
T02	1A310	CORRIDOR	3' - 0"	7' - 0"	1 3/4"	D1	WD	NONE	F1	HM	NONE	1/AS601	2/AS601	--			3B	
T03	1A023	VESTIBULE	3' - 0"	7' - 0"	1 3/4"	D1	WD	NONE	F1	HM	NONE	1/AS601	2/AS601	--			3B	
T04	1A200	CORRIDOR	3' - 0"	7' - 0"	1 3/4"	D1	WD	NONE	F1	HM	NONE	1/AS601	2/AS601	--			3B	
T05	1A209	CORRIDOR	3' - 0"	7' - 0"	1 3/4"	D1	WD	NONE	F1	HM	NONE	1/AS601	2/AS601	--			3B	
T06	1A200	CORRIDOR	3' - 0"	7' - 0"	1 3/4"	D1	WD	NONE	F1	HM	NONE	1/AS601	2/AS601	--			3B	

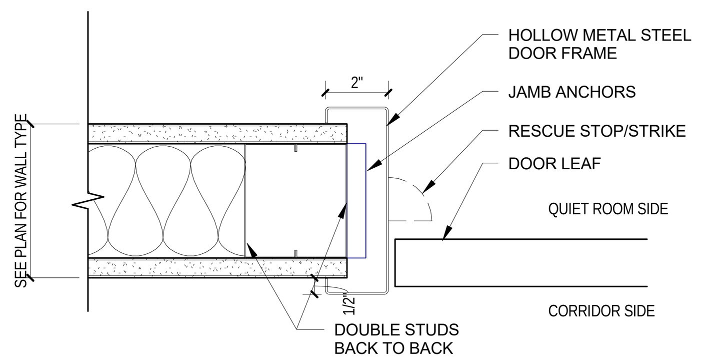

4 AS601 JAMB DETAIL - DOOR, ANTI-BARRICADE
SCALE: 3" = 1'-0"

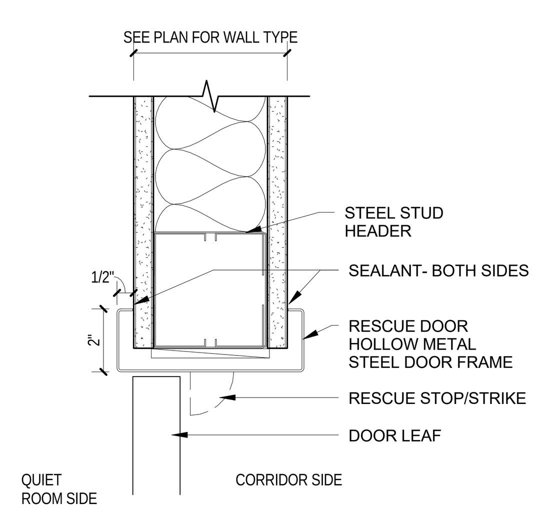

3 AS601 HEAD DETAIL - DOOR, ANTI-BARRICADE
SCALE: 3" = 1'-0"

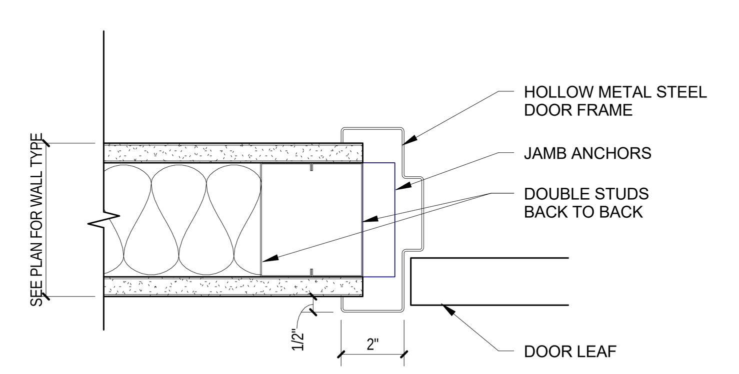

2 AS601 JAMB DETAIL - DOOR
SCALE: 3" = 1'-0"

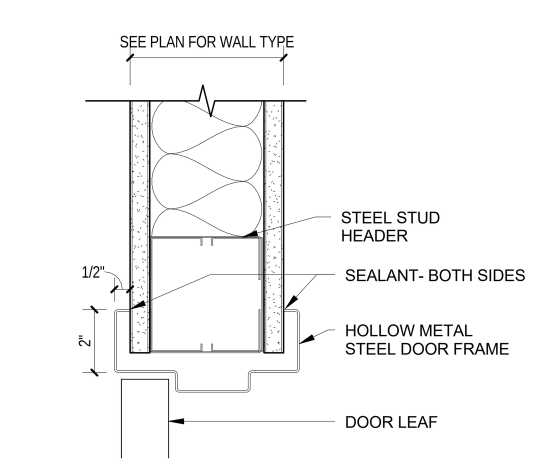

1 AS601 HEAD DETAIL - DOOR
SCALE: 3" = 1'-0"

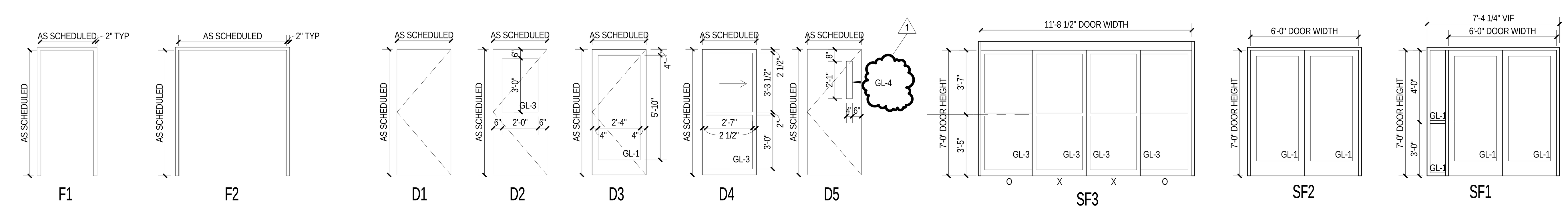

BID SET

Drawing Title: ARCHITECTURAL DOOR SCHEDULE

Project Title: CONSTRUCT MENTAL HEALTH AND SPECIALTY CARE ADDITION

VA Project Number: 757-202

Building Number: 1A

Approved for Design Concept: FARID MEHR, CHIEF ENGINEER

Location: CHALMERS P. WYLIE VAACC

Date: 23 DEC 2016 | Checked By: LJL | Drawn By: ETA

Drawing Number: AS601

Columbus VA — Chalmers P. Wylie Ambulatory Care Center

ARCHITECT/ENGINEERS:

PROJECT LEAD
Architect, Structural Engineer, Civil Engineer
GUIDON DESIGN
GUIDON DESIGN INC.
905 N. CAPITOL AVE. SUITE 100 | INDIANAPOLIS, IN. 46204
317.800.6388 | WWW.GUIDONDESIGN.COM
SUSTAINABLE ARCHITECTURE + ENGINEERING

MEP Engineer
AECOM
277 W. NATIONWIDE BLVD
COLUMBUS, OH 43215

STATE OF OHIO — LUKE J. LEISING 1115350 — REGISTERED ARCHITECT

U.S. Department of Veterans Affairs
CHALMERS P. WYLIE VA AMBULATORY CARE CENTER
420 N JAMES ROAD, COLUMBUS, OH 43219

Revisions:	Date
1 ADDENDUM NO. 1	June 6, 2017

U:\GD_REVIT_LOCALS\15.1021.06_Columbus VA_BH_Arch_edecina.rvt