AIR DEVICE LEGEND

MARK	TYPE	LEGEND	RUNOUT	REMARKS	MFG / MODEL
LD(XY)-(Z) CFM/FD	LOUVER FACE LAY-IN CEILING DIFFUSER	X = SQUARE NECK SIZE XY = RECTANGULAR NECK SIZE Z = THROW, 4-WAY U.N.O. /FD = WITH CEILING RADIATION DAMPER & BLANKET	NECK SIZE / RUNOUT U.N.O. 6X6 6"Ø 9X9 8"Ø 12X12 10"Ø 15X15 12"Ø	OBD - W/ ACCESSIBLE OPERATING LEVER. (SEE NOTE 4 & 5 BELOW) EQUALIZING GRID * FOR NECK SIZES 6X6 TO 9X9 PROVIDE SQUARE TO ROUND ADAPTOR. * FOR NECK SIZES 12X12 & LARGER PROVIDE EXTERNALLY INSULATED SIDE TAP SUPPLY PLENUM.	TITUS / TDC BORDER NO.3
SD(XY)-(Z) CFM/FD	LOUVER FACE SURFACE MOUNTED CLG DIFFUSER W/ BEVELED DROPPED FACE	X = SQUARE NECK SIZE XY = RECTANGULAR NECK SIZE Z = THROW, 4-WAY U.N.O. /FD = WITH CEILING RADIATION DAMPER & BLANKET	NECK SIZE / RUNOUT U.N.O. 6X6 6"Ø 9X9 8"Ø 12X12 10"Ø 15X15 12"Ø	OBD - W/ ACCESSIBLE OPERATING LEVER. (SEE NOTE 4 & 5 BELOW) EQUALIZING GRID * FOR NECK SIZES 6X6 TO 9X9 PROVIDE SQUARE TO ROUND ADAPTOR. * FOR NECK SIZES 12X12 & LARGER PROVIDE EXTERNALLY INSULATED SIDE TAP SUPPLY PLENUM.	TITUS / TDC BORDER NO.6
LCD(X) CFM	LAY-IN CEILING DIFFUSER - FULL FACE LOUVERED	X = ROUND NECK SIZE 4-WAY THROW	ROUND RUNOUT = NECK SIZE	OBD = TITUS AG-75	TITUS / TMS FRAME 3
SR(XY) CFM	SIDE WALL SUPPLY REGISTER	XY = RECTANGULAR NECK SIZE	SEE PLANS	OBD VERTICAL FRONT BLADES	TITUS / 300F
E(X) CFM/FD	ALUMINUM CUBE CORE REGISTER (1/2"X1/2"X1/2")	E = EXHAUST R = RETURN T = TRANSFER X = SQUARE NECK SIZE /FD = WITH CEILING RADIATION DAMPER	SEE PLANS	OBD OMIT OBD ON T'S	TITUS / 50F, ALUMINUM BORDER TITUS / 50R, STEEL BORDER FOR USE WITH CEILING RADIATION DAMPER
RF(X) CFM	ALUMINUM CUBE CORE REGISTER (1/2"X1/2"X1/2") W/ FILTER FRAME	R = RETURN X = SQUARE NECK SIZE	SEE PLANS	OBD 1" FILTER FRAME	TITUS / 50FF LAY-IN BORDER

AIR DEVICE SCHEDULE NOTES:

1. CFM = AIR FLOW (TYPICAL ALL AIR DEVICES).
2. COORDINATE BORDER/FRAME TYPE WITH ARCH REFLECTED CEILING PLAN.
3. DIRECTION ARROWS ON DRAWINGS SHOW FLOW PATTERN.
4. USE SUPPLY DIFFUSERS WITH O.B.D. IN DRYWALL OR INACCESSIBLE CEILINGS.
5. USE SUPPLY DIFFUSERS WITHOUT O.B.D. IN LAY-IN OR ACCESSIBLE CEILINGS.

DUCTWORK LEGEND

SYMBOL	DESCRIPTION
18X12 / 18X12 (WIDTH, DEPTH)	DUCTWORK, DOUBLE LINE & SINGLE LINE INSIDE "FREE AREA" DIMENSIONS ARE SHOWN
16"Ø / 16"Ø	DUCTWORK DOUBLE LINE & SINGLE LINE INSIDE "FREE AREA" DIMENSIONS SHOWN Ø = ROUND
	FLEXIBLE ROUND DUCT MAX. LENGTH = 5'-0"
EX.18X12 / EX.18X12	EXISTING DUCT TO REMAIN NOTATIONS & DIMENSIONS SAME AS NEW DUCT
	EXISTING DUCT, AIR DEVICES, EQUIPMENT, ETC. TO BE REMOVED.
18X12 (HEIGHT, WIDTH)	SUPPLY DUCTWORK SECTION INSIDE DIMENSIONS ARE SHOWN
18X12 (HEIGHT, WIDTH)	RETURN OR EXHAUST DUCTWORK SECTION OUTSIDE DIMENSIONS ARE SHOWN CLEAR
R / R	DUCTWORK RISE (R) OR DROP (D) ARROW SHOWS DIRECTION OF AIR FLOW
	ELBOW TURNED UP WITH TURNING VANES
	ELBOW TURNED DOWN WITH TURNING VANES
	RADIUS TYPE ELBOW CENTERLINE RADIUS = 1.5 X WIDTH
	SQUARE TYPE ELBOW WITH DOUBLE THICKNESS VANES. VANES REQUIRED IN ALL DUCTWORK ELBOWS U.N.O.
AD / AD	ACCESS DOOR (AD) 12X12 UNLESS NOTED OTHERWISE
FD / FD	FIRE DAMPER (FD), FIRE DAMPER-3 HOUR RATED (FD(3HR)), FIRE DAMPER W/SIDEWALL GRILLE (FD(THINLINE) (RUSKIN IBD20G)), COMBINATION SMOKE AND FIRE DAMPER (SFD), OR SMOKE DAMPER (SD). ALL FD, SFD AND SD SHALL HAVE A 12X12 AD U.N.O.
	MANUAL VOLUME DAMPER (MD)
CMD / CMD	MANUAL VOLUME DAMPER WITH CONCEALED DAMPER REGULATOR (CMD) (YOUNG'S REGULATOR- BOWDEN CABLE TYPE)
AD / AD	AUTOMATIC MOTOR OPERATED DAMPER (AD) ALL AD SHALL HAVE A 12X12 ACCESS DOOR U.N.O.
	FLEXIBLE DUCTWORK CONNECTION
	ROUND RUNOUT TO DIFFUSER OR GRILLE WITH SQUARE-TO-ROUND TRANSITION. SEE DETAIL. "LOW PRESSURE SQUARE TO ROUND BRANCH DUCT CONNECTOR DETAIL". RUNOUT SIZE DETERMINED BY SIZE OF DIFFUSER U.N.O.
UC	3/4" DOOR UNDERCUT - SEE ARCH.
14X12, 8X12, 20X12, 12X12	EQUAL AREA SPLITTER
	CONNECT TO EXISTING VERIFY EXACT LOCATION

CONTROLS

CONTROL NOTES:

A. SUBMIT COMPLETE CONTROL AND POWER WIRING DIAGRAMS FOR APPROVAL BEFORE INSTALLING CONTROLS. CONTROL DIAGRAMS ON DRAWINGS ARE INTENDED TO INDICATE, IN GENERAL, CONTROL ARRANGEMENTS. PROVIDE ALL INSTRUMENTS, RELAYS, OPERATORS, SWITCHES, ETC. REQUIRED TO ACCOMPLISH CONTROL SEQUENCES WHETHER OR NOT SUCH DEVICES ARE ACTUALLY SHOWN ON CONTROL DIAGRAMS.

B. INCLUDE ALL CONTROL AND INTERLOCK WIRING AND POWER WIRING FOR CONTROLS. INSTALL IN CONDUIT IN ACCORDANCE WITH PROVISIONS OF ELECTRICAL WORK. PLENUM RATED CABLE MAY BE RUN ABOVE LIFT OUT CEILINGS ONLY. CABLE SHALL BE RUN IN PROFESSIONAL MANNER, TIED OFF TO STRUCTURE AND RUN ALONG AXIS OF BUILDING.

C. DAMPERS AND ACTUATORS: ACTUATORS SHALL BE DIRECT COUPLED, SPRING RETURN AS MANUFACTURED BY BELIMO. ROUND DAMPERS SHALL BE RUSKIN CDRS25 WITH BLADE EDGE SEAL AND MAXIMUM LEAKAGE OF .15 CFM PER INCH BLADE CIRCUMFERENCE AT 4 INCHES W.C. PRESSURE DIFFERENTIAL. RECTANGULAR DAMPERS SHALL BE RUSKIN RCD45 WITH BLADE EDGE SEALS AND MAXIMUM LEAKAGE OF 10 CFM PER SQ. FT. AT 4 INCHES W.C. PRESSURE DIFFERENTIAL.

D. THIS CONTRACTOR SHALL PROVIDE ALL POWER WIRING FOR CONTROL PANELS AND DEVICES NOT SHOWN ON ELECTRICAL DRAWINGS.

E. FLOAT SWITCHES IN AUXILIARY DRAIN PANS SHALL BE AQUAGUARD AG-1200 OR APPROVED EQUAL.

F. THERMOSTATS FOR FANS: JOHNSON CONTROLS MODEL T26. COOLING THERMOSTATS SHALL HAVE LIMITED RANGE OF 78 TO 90°F. THERMOSTATS SHALL BE LABELED "VENTILATION" AND INDICATE FANS SERVED.

G. SMOKE DETECTORS: FURNISHED AND WIRED UNDER DIVISION 16.

H. OBTAIN BUILDING OPERATION SCHEDULE FROM OWNER IN WRITING AND SET EQUIPMENT OPERATION SCHEDULES ACCORDINGLY. SET THERMOSTAT SOFTWARE PARAMETERS AND SETPOINT LIMITATIONS PER OWNER'S DIRECTIONS.

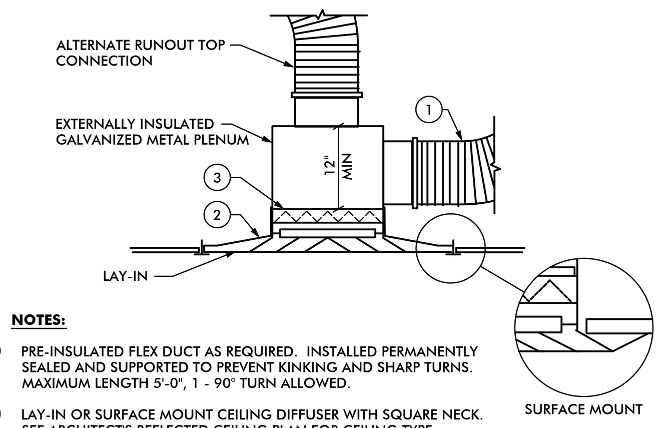

NOTES:

1. PRE-INSULATED FLEX DUCT AS REQUIRED. INSTALLED PERMANENTLY SEALED AND SUPPORTED TO PREVENT KINKING AND SHARP TURNS. MAXIMUM LENGTH 5'-0", 1 - 90° TURN ALLOWED.
2. LAY-IN OR SURFACE MOUNT CEILING DIFFUSER WITH SQUARE NECK. SEE ARCHITECT'S REFLECTED CEILING PLAN FOR CEILING TYPE.
3. WHERE SCHEDULED, PROVIDE OBD WITH OPERATING LEVER ACCESSIBLE FROM FACE OF DIFFUSER.

CEILING DIFFUSER DETAIL

FOR RUNOUTS 10"Ø AND LARGER
RECTANGULAR OR SQUARE NECK
SCALE: NONE

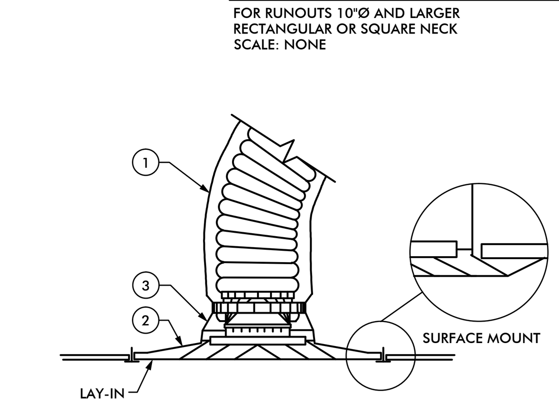

NOTES:

1. PRE-INSULATED FLEX DUCT AS REQUIRED. INSTALLED PERMANENTLY SEALED AND SUPPORTED TO PREVENT KINKING AND SHARP TURNS. MAXIMUM LENGTH 5'-0", 1 - 90° TURN ALLOWED.
2. LAY-IN OR SURFACE MOUNT CEILING DIFFUSER WITH SQUARE NECK AND WITHOUT OBD. SEE ARCHITECT'S REFLECTED CEILING PLAN FOR CEILING TYPE.
3. ROUND TO SQUARE ADAPTER AS REQUIRED.

CEILING DIFFUSER DETAIL

FOR 8"Ø RUNOUTS AND SMALLER
RECTANGULAR OR SQUARE NECK
SCALE: NONE

OSA CALCULATIONS PER 2009 IMC - TABLE 403.3 & AIA 2006 - TABLE 2.1-2

OSA UNIT	AREA SERVED	POPULATION CALCULATION	SPACE POPULATION	OSA CALCULATION	OSA REQUIRED	TOTAL OSA SUPPLIED
100% OSA UNIT	RECEPTION 7131	104 FT² X 5 PEOPLE / 1000 FT² =	1	1 PERSON X 5 CFM / PERSON + 104 FT² X 0.06 CFM / FT² =	10	10
	CONFERENCE ROOM 7131*	572 FT² X 50 PEOPLE / 1000 FT² =	28	28 PEOPLE X 5 CFM / PERSON X 0.5 + 572 FT² X 0.06 FT² =	105	105
	CLEAN UTILITY 7126	N/A	N/A	79 FT² X 0.12 =	10	100
	SLEEP 7124	POPULATION FROM FURNITURE	1	1 PERSON X 5 CFM / PERSON + 171 FT² X 0.06 CFM / FT² =	15	15
	SLEEP 7123	POPULATION FROM FURNITURE	1	1 PERSON X 5 CFM / PERSON + 171 FT² X 0.06 CFM / FT² =	15	15
	SLEEP 7121E	POPULATION FROM FURNITURE	1	1 PERSON X 5 CFM / PERSON + 171 FT² X 0.06 CFM / FT² =	15	15
	SLEEP 7121C	POPULATION FROM FURNITURE	1	1 PERSON X 5 CFM / PERSON + 156 FT² X 0.06 CFM / FT² =	15	15
	SLEEP 7119	POPULATION FROM FURNITURE	1	1 PERSON X 5 CFM / PERSON + 156 FT² X 0.06 CFM / FT² =	15	15
	SLEEP 7120	POPULATION FROM FURNITURE	1	1 PERSON X 5 CFM / PERSON + 156 FT² X 0.06 CFM / FT² =	15	15
	SOILED UTILITY 7117	N/A	N/A	801 FT³ X 10 ACH EXHAUST / 60 MIN / HR =	135 EXHAUST	200 EXHAUST
	EMG EXAM 7111	POPULATION FROM FURNITURE	1	1 PERSON X 5 CFM / PERSON + 171 FT² X 0.06 CFM / FT² =	15	15
	EMG EXAM 7110A	POPULATION FROM FURNITURE	1	1 PERSON X 5 CFM / PERSON + 171 FT² X 0.06 CFM / FT² =	15	15
	OFFICE 7110C	POPULATION FROM FURNITURE	1	1 PERSON X 5 CFM / PERSON + 130 FT² X 0.06 CFM / FT² =	15	15
	OFFICE 7110D	POPULATION FROM FURNITURE	1	1 PERSON X 5 CFM / PERSON + 130 FT² X 0.06 CFM / FT² =	15	15
	RESIDENCE FELLOWS 7109	POPULATION FROM FURNITURE	1	3 PERSON X 5 CFM / PERSON + 193 FT² X 0.06 CFM / FT² =	25	15
	EEG EXAM 7108	POPULATION FROM FURNITURE	1	1 PERSON X 5 CFM / PERSON + 151 FT² X 0.06 CFM / FT² =	15	15
	PROCEDURE 7234	N/A	N/A	1530 FT³ X 3 ACH EXHAUST / 60 MIN / HR =	75	75
	SOILED UTILITY 7233A	N/A	N/A	495 FT³ X 10 ACH EXHAUST / 60 MIN / HR =	85 EXHAUST	95 EXHAUST
	EXAM 7230	POPULATION FROM FURNITURE	1	1 PERSON X 5 CFM / PERSON + 154 FT² X 0.06 CFM / FT² =	15	15
	RESEARCH ASST. 7229A	POPULATION FROM FURNITURE	2	2 PEOPLE X 5 CFM / PERSON + 194 FT² X 0.06 CFM / FT² =	20	20
	RESEARCH ASST. 7227	POPULATION FROM FURNITURE	3	3 PEOPLE X 5 CFM / PERSON + 215 FT² X 0.06 CFM / FT² =	30	30
	DATA MANAGER AND FILES 7215	POPULATION FROM FURNITURE	2	2 PEOPLE X 5 CFM / PERSON + 236 FT² X 0.06 CFM / FT² =	25	30
	GRECC INVESTIGATOR 7214	POPULATION FROM FURNITURE	2	2 PEOPLE X 5 CFM / PERSON + 134 FT² X 0.06 CFM / FT² =	20	20
	RESEARCH ASST. 7213	POPULATION FROM FURNITURE	2	2 PEOPLE X 5 CFM / PERSON + 122 FT² X 0.06 CFM / FT² =	20	20
	CONFERENCE ROOM 7212*	POPULATION FROM FURNITURE	6	6 PEOPLE X 5 CFM / PERSON X 0.5 + 143 FT² X 0.06 CFM / FT² =	25	25
	EXAM 7203	POPULATION FROM FURNITURE	1	1 PERSON X 5 CFM / PERSON + 177 FT² X 0.06 CFM / FT² =	15	15
	EXAM 7202	POPULATION FROM FURNITURE	1	1 PERSON X 5 CFM / PERSON + 177 FT² X 0.06 CFM / FT² =	15	15
	ADMIN. 7201*	POPULATION FROM FURNITURE	6	6 PEOPLE X 5 CFM / PERSON X 0.5 + 233 FT² X 0.06 CFM / FT² =	30	30
	DIABETIC SHOE STORAGE 8102	N/A	N/A	117 FT² X 0.12 =	15	15
	DIABETIC SHOE SCANNER 8103	POPULATION FROM FURNITURE	1	1 PERSON X 5 CFM / PERSON + 177 FT² X 0.06 CFM / FT² =	15	15
	SERVICE SECRETARY'S OFFICE 8210	POPULATION FROM FURNITURE	1	1 PERSON X 5 CFM / PERSON + 137 FT² X 0.06 CFM / FT² =	15	15
	SERVICE CHIEF'S OFFICE 8212	POPULATION FROM FURNITURE	1	1 PERSON X 5 CFM / PERSON + 161 FT² X 0.06 CFM / FT² =	15	15
	CS OFFICE 8308	POPULATION FROM FURNITURE	1	1 PERSON X 5 CFM / PERSON + 103 FT² X 0.06 CFM / FT² =	10	10
	CS OFFICE 8309	POPULATION FROM FURNITURE	1	2 PEOPLE X 5 CFM / PERSON + 146 FT² X 0.06 CFM / FT² =	20	20
	CS OFFICE 8310	POPULATION FROM FURNITURE	2	2 PEOPLE X 5 CFM / PERSON + 141 FT² X 0.06 CFM / FT² =	20	20
	PHOTO STUDIO 8311	POPULATION FROM FURNITURE	1	1 PERSON X 5 CFM / PERSON + 262 FT² X 0.06 CFM / FT² =	20	20
	ILLUSTRATION 8312	POPULATION FROM FURNITURE	1	1 PERSON X 5 CFM / PERSON + 322 FT² X 0.06 CFM / FT² =	25	25

* INTERMITTENT OCCUPANCY

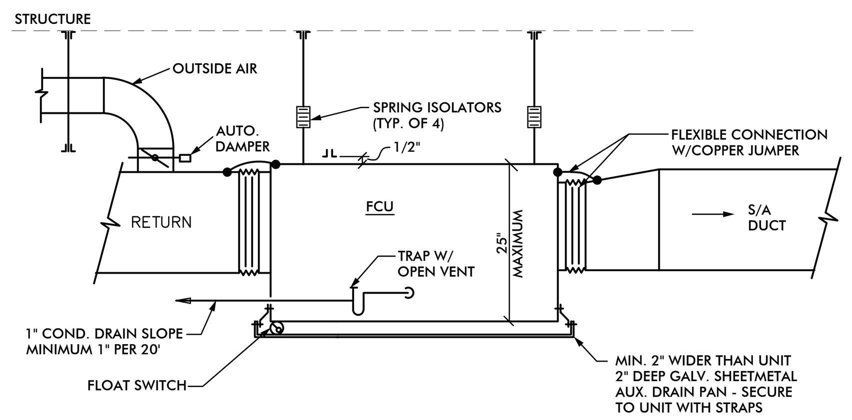

TYPICAL HORIZONTAL AC UNIT DETAIL

SCALE: NONE

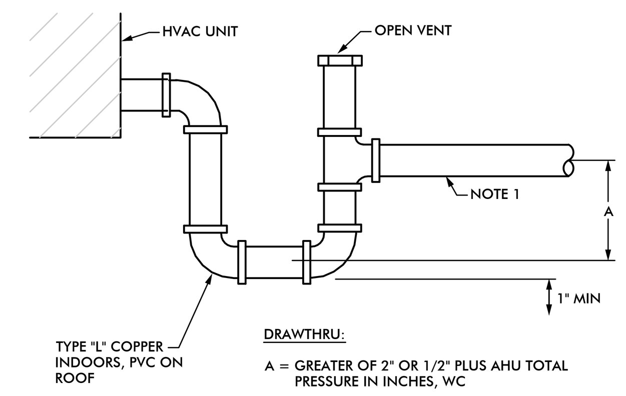

DRAWTHRU:

A = GREATER OF 2" OR 1/2" PLUS AHU TOTAL PRESSURE IN INCHES, WC

NOTES:

1. 1"Ø MIN PIPE SIZE OR SIZE PER DRAIN TAP IN AHU. INSULATE FOR CONDENSATE CONTROL AS SPECIFIED.

CONDENSATE DRAIN TRAP DETAIL

SCALE: NONE

AC UNITS

MARK	SERVES	TYPE	SUPPLY FAN CFM	SUPPLY FAN E.S.P. IN. W.G.	SUPPLY FAN MIN. WHEEL DIA - TYPE	SUPPLY FAN MIN. OSA CFM	MOTOR HP	MOTOR V/Ø	COOLING COIL CFM	AIR ENT. °Fdb	AIR ENT. °Fwb	AIR LVG. °Fdb	AIR LVG. °Fwb	GPM	EWT (°F)	MAX FACE VEL. (FPM)	HEATING COIL TYPE	CFM	MBH	AIR ENT. °Fdb	MAX FACE VEL. (FPM)	FILTERS	ACCESSORIES	BASIS OF DESIGN
AC-1	PROCEDURE 7234	I	500	0.5	12"	20	1	208/3	500	75.0	63.0	57.1	54.9	2.3	45.0	333.3	STEAM	500	24.8	75.0	333.3	[A] [B]	[1]	TEMTROL

TYPES:

I: MODULAR BUILD VARIABLE VOLUME, HORIZONTAL DRAW

ACCESSORIES:

[1] VARIABLE FREQUENCY DRIVE

NOTES:

A. SCHEDULED SUPPLY FAN PRESSURE DROPS INCLUDING THE FOLLOWING AIR PRESSURE DROPS IN "WG"
COOLING COIL: ALL UNITS = 1.00"
HEATING COIL: ALL UNITS = 0.25"
PRE FILTER: ALL UNITS = 1.00" (CHANGEOUT)
FINAL FILTERS: ALL UNITS = 1.00" (CHANGEOUT)

B. MAXIMUM COOLING COIL WATER PRESSURE DROP = 15 FT.

FILTER TYPES: (SEE SPECS.)

[A] 2" THICK PLEATED FILTERS (MERV 8) FLAT FRAME PRE FILTER

[B] 90% CARTRIDGE FINAL FILTERS

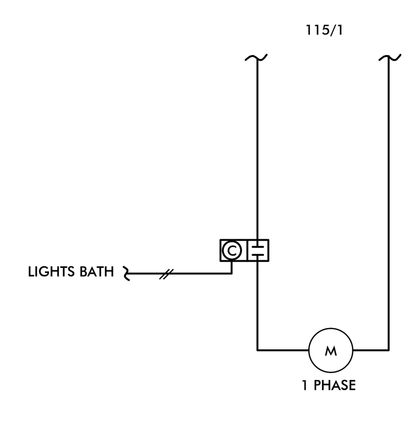

EF-3 THRU EF-8 CONTROLS

SCALE: NONE

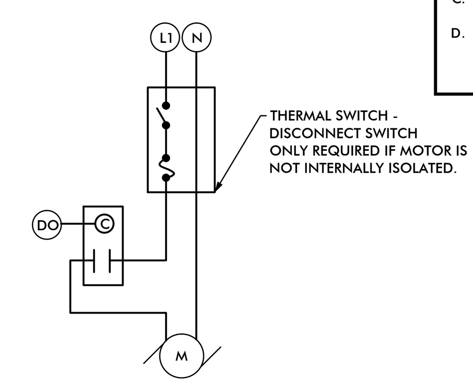

EF-1, EF-2, & EF-9 FAN CONTROLS

SCALE: NONE

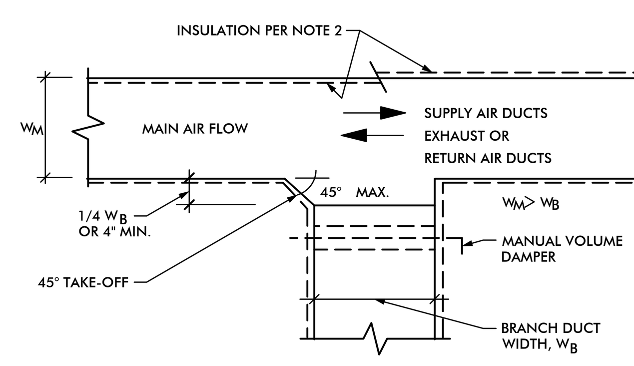

NOTES:

1. FABRICATE PER SMACNA DUCT CONSTRUCTION STANDARDS FIGURE #2-8.
2. SEE SPECIFICATIONS FOR INSULATION REQUIREMENTS. FABRICATE LINED DUCT CONNECTIONS SO THAT THERE ARE NO EXPOSED LINER EDGES.

DUCT BRANCH TAKE-OFF DETAIL

SCALE: NONE

FAN COIL UNIT

MARK	SERVES	SUPPLY FAN CFM	SUPPLY FAN EXT. S.P.	SUPPLY FAN HP	OSA CFM	COOLING SENSIBLE MBH	COOLING TOTAL MBH	GPM	ENT. AIR °Fdb	ENT. AIR °Fwb	HEATING MBH	STEAM PRESSURE	ENT. AIR F	ACCESSORIES	ELECTRICAL V/Ø	BASIS OF DESIGN (TRANE)
FCU-7-1	CONFERENCE 7131	484	0.2	210 W	20	8.9	10.4	2.2	75.0	63.0	11.7	2 PSIG	70.0	[1] [2] [3] [4] [5] [6]	115/1	FCCB04
FCU-7-2	SLEEP 7124	484	0.2	210 W	20	8.9	10.4	2.2	75.0	63.0	11.7	2 PSIG	70.0	[1] [2] [3] [4] [5] [6]	115/1	FCCB04
FCU-7-3	SLEEP 7123	484	0.2	210 W	20	8.9	10.4	2.2	75.0	63.0	11.7	2 PSIG	70.0	[1] [2] [3] [4] [5] [6]	115/1	FCCB04
FCU-7-4	SLEEP 7121E	484	0.2	210 W	20	8.9	10.4	2.2	75.0	63.0	11.7	2 PSIG	70.0	[1] [2] [3] [4] [5] [6]	115/1	FCCB04
FCU-7-5	SLEEP 7121C	484	0.2	210 W	20	8.9	10.4	2.2	75.0	63.0	11.7	2 PSIG	70.0	[1] [2] [3] [4] [5] [6]	115/1	FCCB04
FCU-7-6	SLEEP 7120	484	0.2	210 W	20	8.9	10.4	2.2	75.0	63.0	11.7	2 PSIG	70.0	[1] [2] [3] [4] [5] [6]	115/1	FCCB04
FCU-7-7	SLEEP 7119	484	0.2	210 W	20	8.9	10.4	2.2	75.0	63.0	11.7	2 PSIG	70.0	[1] [2] [3] [4] [5] [6]	115/1	FCCB04
FCU-7-8	RESEARCH ASST. 7227	484	0.2	210 W	20	8.9	10.4	2.2	75.0	63.0	11.7	2 PSIG	70.0	[1] [2] [3] [4] [5] [6]	115/1	FCCB04
FCU-7-9	SLEEP CONTROL 7106	484	0.2	210 W	20	8.9	10.4	2.2	75.0	63.0	11.7	2 PSIG	70.0	[1] [2] [3] [4] [5] [6]	115/1	FCCB04
FCU-8-1	ILLUSTRATION 8312	781	0.2	320 W	30	13.5	14.5	3.1	75.0	63.0	18.3	2 PSIG	70.0	[1] [2] [3] [4] [5] [6]	115/1	FCCB06
FCU-8-2	SERV. CHIEF'S OFFICE 8212	781	0.2	320 W	30	13.5	14.5	3.1	75.0	63.0	18.3	2 PSIG	70.0	[1] [2] [3] [4] [5] [6]	115/1	FCCB06

NOTES:

A. CAPACITIES ARE MINIMUM GROSS CAPACITIES.
B. STEAM COIL DESIGN PRESSURE = 2 PSIG.
C. EXTERNAL STATIC PRESSURE DOES NOT INCLUDE HEATING COIL.
D. EXTERNAL STATIC PRESSURE INCLUDES 0.25" FOR DIRTY FILTERS.

ACCESSORIES:

[1] 2" THICK THROWAWAY FILTERS
[2] 2" DEEP AUXILIARY DRAIN PAN WITH FLOAT SWITCH
[3] RUBBER-IN-SHEAR ISOLATOR
[4] UNIT MOUNTED DISCONNECT SWITCH
[5] FLEXIBLE DUCT CONNECTIONS
[6] PIPING PACKAGE. SEE SPECIFICATIONS

FAN SCHEDULE

MARK	SERVES	LOCATION	TYPE	CFM	E.S.P. IN. W.G.	LIMIT	MOTOR HP	MOTOR V/Ø	ACCESSORIES	INTERLOCK	BASIS OF DESIGN (GREENHECK)
EF-1	TOILET 7233B	CEILING	A	75	.5	2.0	129 W	115/1	[1] [2] [3] [4] [5] [6] [7] [8]	BAS	SP-B150
EF-2	SOILED UTILITY 7233A	CEILING	A	95	0.5	2.0	129W	115/1	[1] [2] [3] [4] [5] [6] [7] [8]	BAS	SP-B150
EF-3	BATH 7125	CEILING	A	120	0.5	2.5	129W	115/1	[1] [2] [3] [4] [5] [6] [7] [8]	LIGHTS	SP-B150
EF-4	BATH 7122	CEILING	A	120	0.5	2.5	129W	115/1	[1] [2] [3] [4] [5] [6] [7] [8]	LIGHTS	SP-B150
EF-5	BATH 7121F	CEILING	A	120	0.5	2.5	129W	115/1	[1] [2] [3] [4] [5] [6] [7] [8]	LIGHTS	SP-B150
EF-6	BATH 7121B	CEILING	A	120	0.5	2.5	129W	115/1	[1] [2] [3] [4] [5] [6] [7] [8]	LIGHTS	SP-B150
EF-7	BATH 7121A	CEILING	A	120	0.5	2.5	129W	115/1	[1] [2] [3] [4] [5] [6] [7] [8]	LIGHTS	SP-B150
EF-8	BATH 7118	CEILING	A	120	0.5	2.5	129W	115/1	[1] [2] [3] [4] [6] [7] [8]	LIGHTS	SP-B150
EF-9	SOILED UTILITY 7117	CEILING	A	200	0.500	3.0	135 W	115/1	[1] [2] [3] [4] [6] [7] [8]	BAS	SP-A390

FAN TYPES:

[A] CEILING MOUNTED EXHAUST FAN, DIRECT DRIVE

FAN ACCESSORIES:

[1] BACKDRAFT DAMPER
[2] FLEXIBLE CONNECTORS
[3] ACOUSTICAL LINED HOUSING
[4] RUBBER-IN-SHEAR ISOLATOR
[5] CEILING GRILLE
[6] THERMAL OVERLOAD PROTECTION
[7] SOLID STATE SPEED CONTROLLER
[8] PLUG TYPE DISCONNECT

FAN SCHEDULE NOTES:

1. LIMIT = DESIGN CRITERIA: MAX. SONES

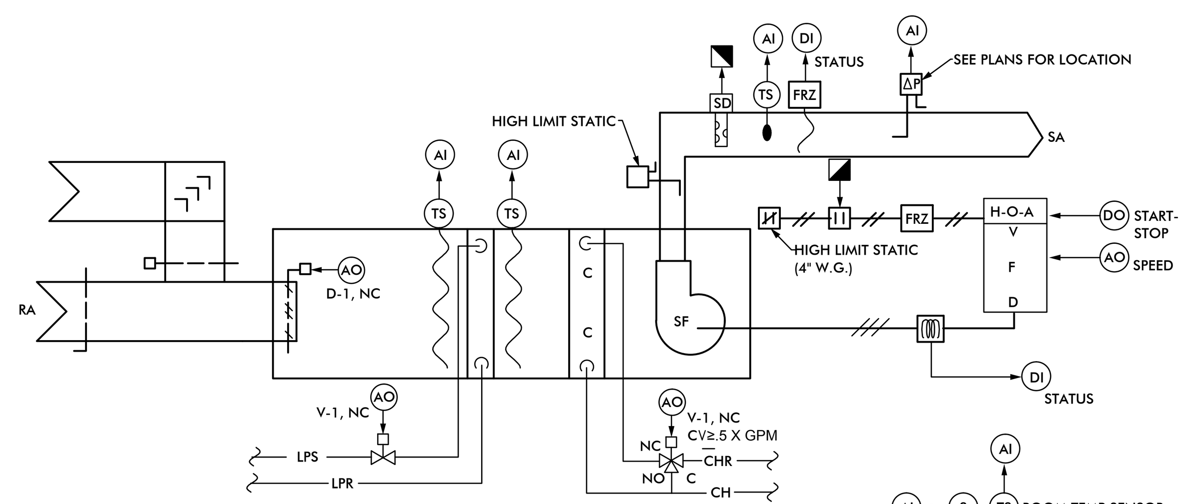

AC-1 CONTROLS

SCALE: NONE

SEQUENCE

UNOCCUPIED: AS ROOM TEMPERATURE INCREASES ABOVE SET POINT, CHILLED WATER VALVE SHALL OPEN. IF ROOM TEMPERATURE CONTINUES TO RISE, VFD SHALL INCREASE. IF ROOM TEMPERATURE FALLS BELOW SETPOINT, STEAM VALVE TO OPEN.

OCCUPIED: WHEN UNIT IS PUT IN OCCUPIED SETTING, FAN SHALL GO TO PRESET CFM. STEAM AND CHILLED WATER VALVES WILL MODULATE TO MAINTAIN ROOM TEMPERATURE.

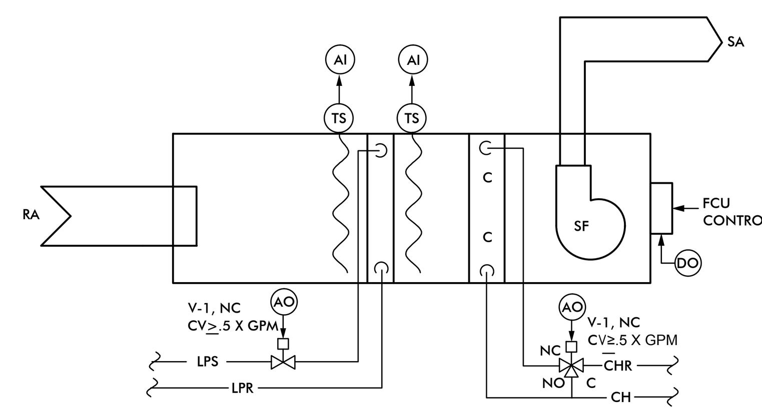

FCU CONTROLS

SCALE: NONE
SEE DRAWINGS FOR ALL POINTS REQUIRED.

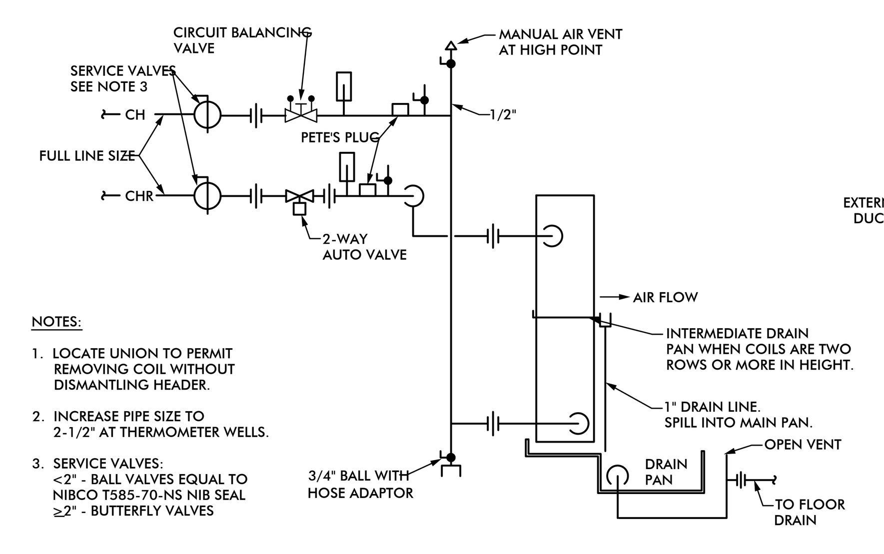

NOTES:

1. LOCATE UNION TO PERMIT REMOVING COIL WITHOUT DISMANTLING HEADER.
2. INCREASE PIPE SIZE TO 2-1/2" AT THERMOMETER WELLS.
3. SERVICE VALVES: <2" - BALL VALVES EQUAL TO NIBCO T585-70-NS NIB SEAL ≥2" - BUTTERFLY VALVES

TYPICAL CHILLED WATER COIL PIPING 2-WAY VALVE DETAIL

SCALE: NONE

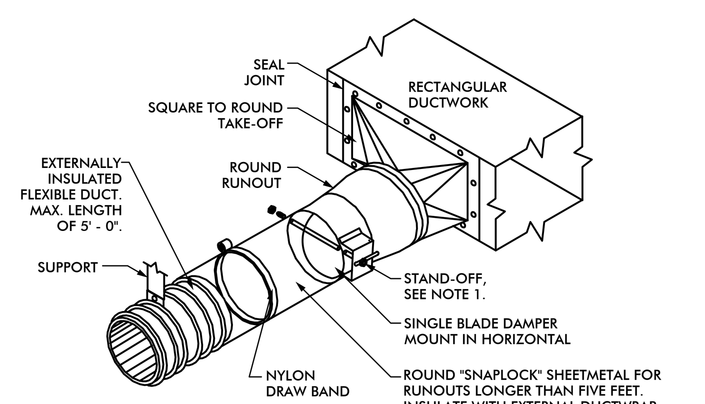

NOTES:

1. PROVIDE STAND-OFF AND EXTENSION ROD TO ACCOMODATE INSULATION.
2. INSULATE SPIN-IN WITH EXTERNAL DUCT WRAP. SLIT INSULATION AT DAMPER RODS. SEAL JOINTS VAPOR TIGHT WITH MASTIC.
3. SEAL ALL JOINTS TO PREVENT LEAKAGE.

LOW PRESSURE ROUND BRANCH DUCT CONNECTOR DETAIL

SCALE: NONE

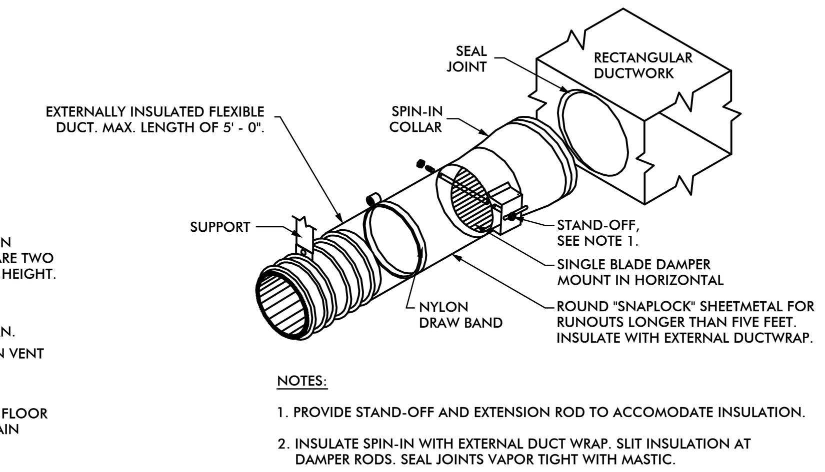

NOTES:

1. PROVIDE STAND-OFF AND EXTENSION ROD TO ACCOMODATE INSULATION.
2. INSULATE SPIN-IN WITH EXTERNAL DUCT WRAP. SLIT INSULATION AT DAMPER RODS. SEAL JOINTS VAPOR TIGHT WITH MASTIC.
3. SEAL ALL JOINTS TO PREVENT LEAKAGE.

LOW PRESSURE ROUND BRANCH DUCT CONNECTOR DETAIL

SCALE: NONE

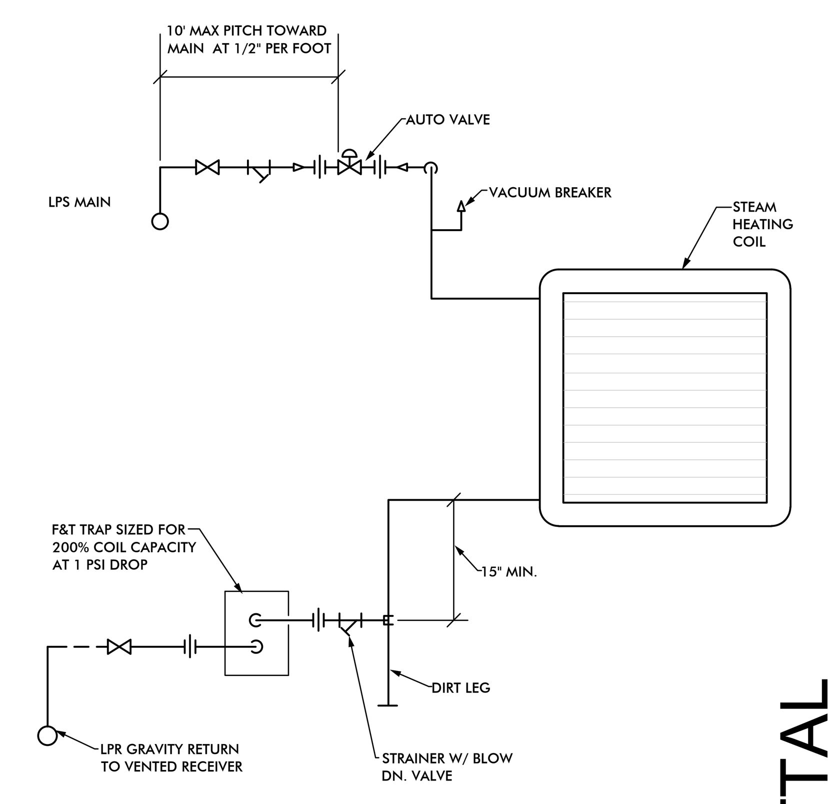

NOTES

1. FOR STACKED COILS, PROVIDE VACUUM BREAKER AND TRAP FOR EACH COIL.

STEAM COIL PIPING DETAIL

SCALE: NONE

Whitaker & Rawson, Inc.
3332 Old Montgomery Hwy
Suite 103 Mark Harris Bldg
Birmingham, AL. 35209
Phone: 205-870-0801
Fax: 205-870-0891
www.whitakerandrawson.com
Mechanical: Doug Rawson
Direct Line - (205) 870-0801
Plumbing: Carol Johnson
Direct Line - (205) 949-5123

FINAL SUBMITTAL

Revisions	Date

ALABAMA REGISTERED NO. 19368 PROFESSIONAL ENGINEER DOUGLAS E. RAWSON
8-12-11
10007

BIRCHFIELD PENUEL & ASSOCIATES, ARCHITECTS
2805 CRESCENT AVENUE · SUITE 200 ·BIRMINGHAM, ALABAMA 35209

Department of Veterans Affairs
MEDICAL CENTER
BIRMINGHAM, ALABAMA

Drawing Title: HVAC SCHEDULES, LEGENDS, & DETAILS

Project Title: RENOVATE SPACE FOR REHAB AND PHYSICAL MEDICINE

Building Numbers:
Checked: DER
Drawn: JRB

Location: VA MEDICAL CENTER BIRMINGHAM, ALABAMA

Date: 08-12-11
VA Project No. 521-10-101
CAD File No. 4608A01

DRAWING NO. M0.1
Dwg. Of

Veterans Administration