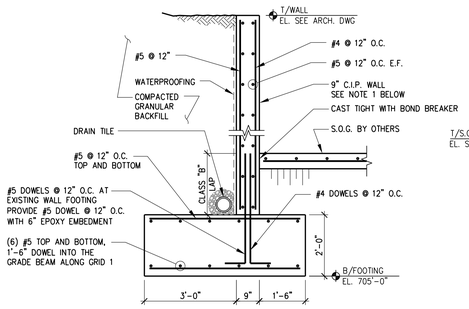

NOTES:
1. AT NORTH END OF 9" C.I.P. WALL, PROVIDE #4 X 2'-6" @ 12" O.C. DOWELS BETWEEN 9" C.I.P. WALL AND THE EXISTING WALL WITH 6" EPOXY EMBEDMENT AT EXISTING WALL. LOCATE THE #4 DOWELS AT CENTER OF 9" C.I.P. WALL.
2. SEE ARC. DWG 1/A12 FOR THE LOCATION OF 9" C.I.P. WALL

B5 SECTION

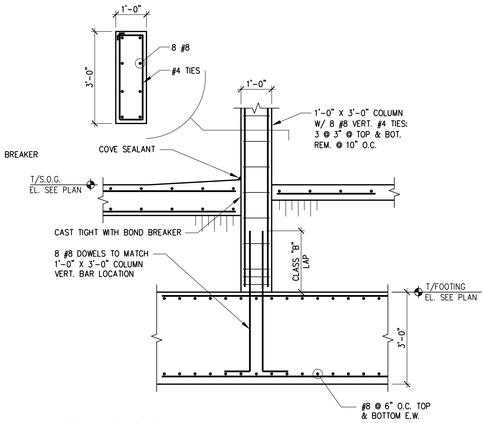

B7 SECTION

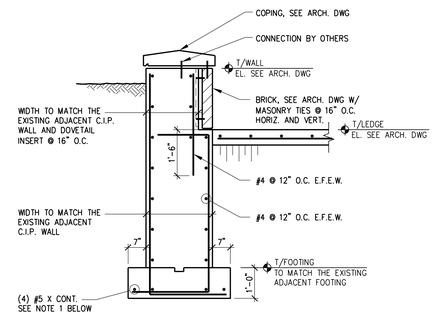

NOTE:
1. AT EACH END, PROVIDE (4) #5 X 2'-6" DOWELS WITH 5" EPOXY EMBEDMENT DOWEL INTO THE EXISTING ADJACENT FOOTING.

D5 SECTION

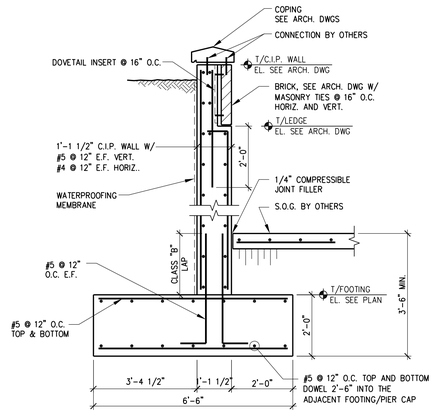

D7 SECTION

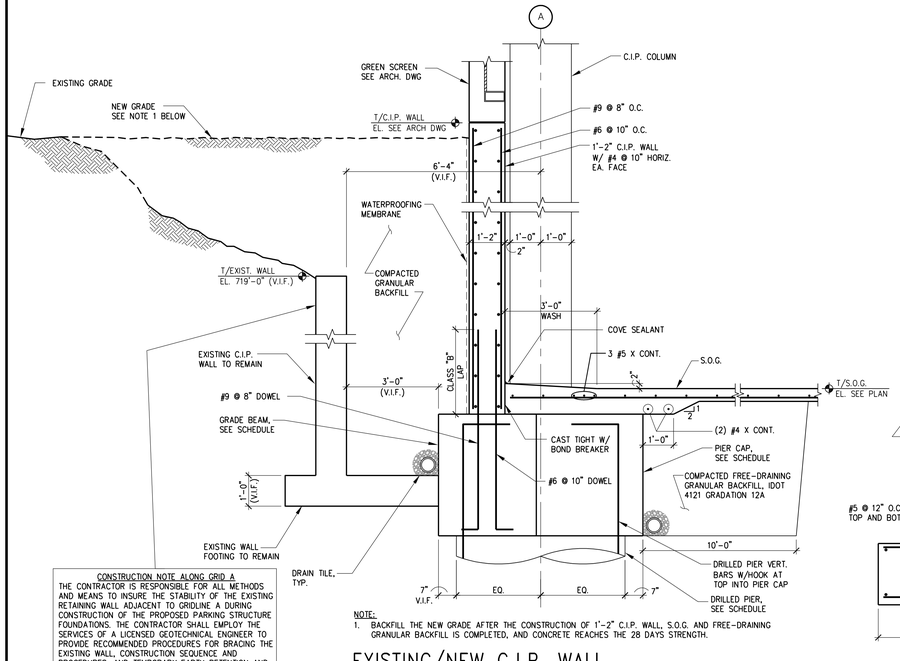

NOTE:
1. BACKFILL THE NEW GRADE AFTER THE CONSTRUCTION OF 1'-2" C.I.P. WALL, S.O.G. AND FREE-DRAINING GRANULAR BACKFILL IS COMPLETED, AND CONCRETE REACHES THE 28 DAYS STRENGTH.

F1 EXISTING/NEW C.I.P. WALL (ALONG GRID A)

CONSTRUCTION NOTE ALONG GRID A
THE CONTRACTOR IS RESPONSIBLE FOR ALL METHODS AND MEANS TO INSURE THE STABILITY OF THE EXISTING RETAINING WALL ADJACENT TO GRIDLINE A DURING CONSTRUCTION OF THE PROPOSED PARKING STRUCTURE FOUNDATIONS. THE CONTRACTOR SHALL EMPLOY THE SERVICES OF A LICENSED GEOTECHNICAL ENGINEER TO PROVIDE RECOMMENDED PROCEDURES FOR BRACING THE EXISTING WALL, CONSTRUCTION SEQUENCE AND PROCEDURES, AND TEMPORARY EARTH RETENTION AND SHORING, IN ORDER TO INSURE THE STABILITY OF THE EXISTING WALL DURING CONSTRUCTION ACTIVITIES. THE CONTRACTOR SHALL SUBMIT TO THE ENGINEER SIGNED AND SEALED RECOMMENDATIONS AND CALCULATIONS PREPARED BY THE LICENSED GEOTECHNICAL ENGINEER PRIOR TO CONSTRUCTION ACTIVITIES.

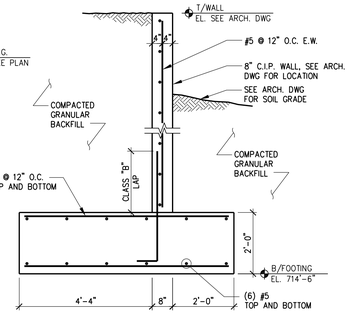

F3 SECTION

AMBIENT AIR TEMP. °F	OPNG WIDTH INCHES
80°	2.47"
70°	2.53"
60°	2.59"
50	2.65"
40°	2.71"

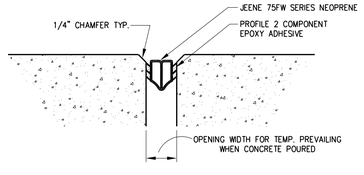

F5 EXPANSION JOINT DETAIL

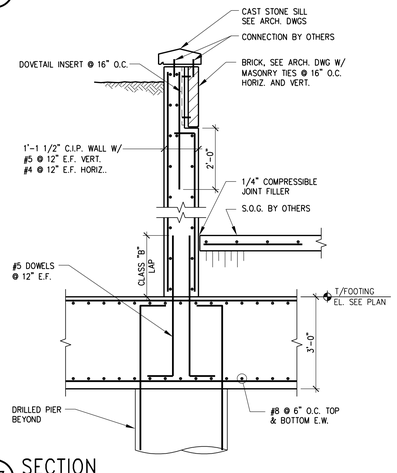

F7 SECTION

FINAL CONSTRUCTION DOCUMENTS	06/10/11
100% REVIEW SUBMISSION (NOT FOR CONSTRUCTION)	04/11/11
75% REVIEW SUBMISSION (NOT FOR CONSTRUCTION)	02/03/11
75% REVIEW SUBMISSION (NOT FOR CONSTRUCTION) - COST ESTIMATE	01/19/11
35% REVIEW SUBMISSION (NOT FOR CONSTRUCTION)	11/22/10
Revisions:	Date

CONSULTANTS/ENGINEERS:

KJWW ENGINEERING CONSULTANTS
Mechanical/Electrical/Plumbing Engineer
623 26TH AVENUE
ROCK ISLAND, ILLINOIS 61201
309.788.0673 Telephone
309.786-5967 Fax

TERRACON
Geotechnical Engineer
2640 12TH STREET SW
CEDAR REAPIDS, IOWA 52404
319.366.8321 Telephone
319.366.0032 Fax

GRAEF
Civil Engineer/Landscape Architect
332 SOUTH MICHIGAN, SUITE 1400
CHICAGO, ILLINOIS 60604-4367
312.582.2020 Telephone
312.939.7014 Fax

WALKER PARKING CONSULTANTS
Structural Engineer
505 DAVIS ROAD
ELGIN, ILLINOIS 60123
847.697.2640 Telephone
847.697.7439 Fax

FAITHFUL+GOULD
Cost Management
222 SOUTH RIVERSIDE PLAZA, SUITE 2240
CHICAGO, ILLINOIS 60606
312.612.6319 Telephone
312.655.9037 Fax

ARCHITECT:

Loebl Schlossman & Hackl
Architecture • Planning • Interiors
233 North Michigan Avenue
Suite 3000
Chicago, Illinois 60601
312.565.1800 Telephone
312.565.5912 Facsimile
www.lshdesign.com

Copyright © 2010 Loebl Schlossman & Hackl Inc.

Drawing Title: FOUNDATION SECTIONS

Project Title: 400 CAR PARKING GARAGE

Project Number: 636-402

Building Number: 43

Approved: Project Director

Location: IOWA CITY, IA

Drawing Number: S-305

Iowa City VA Healthcare System
Department of Veterans Affairs Medical Center

Date: 06/10/2011 | Checked: BFN | Drawn: MJK

Dwg. 93 of 152

Office of Construction and Facilities Management

Department of Veterans Affairs

VA FORM 08-6231