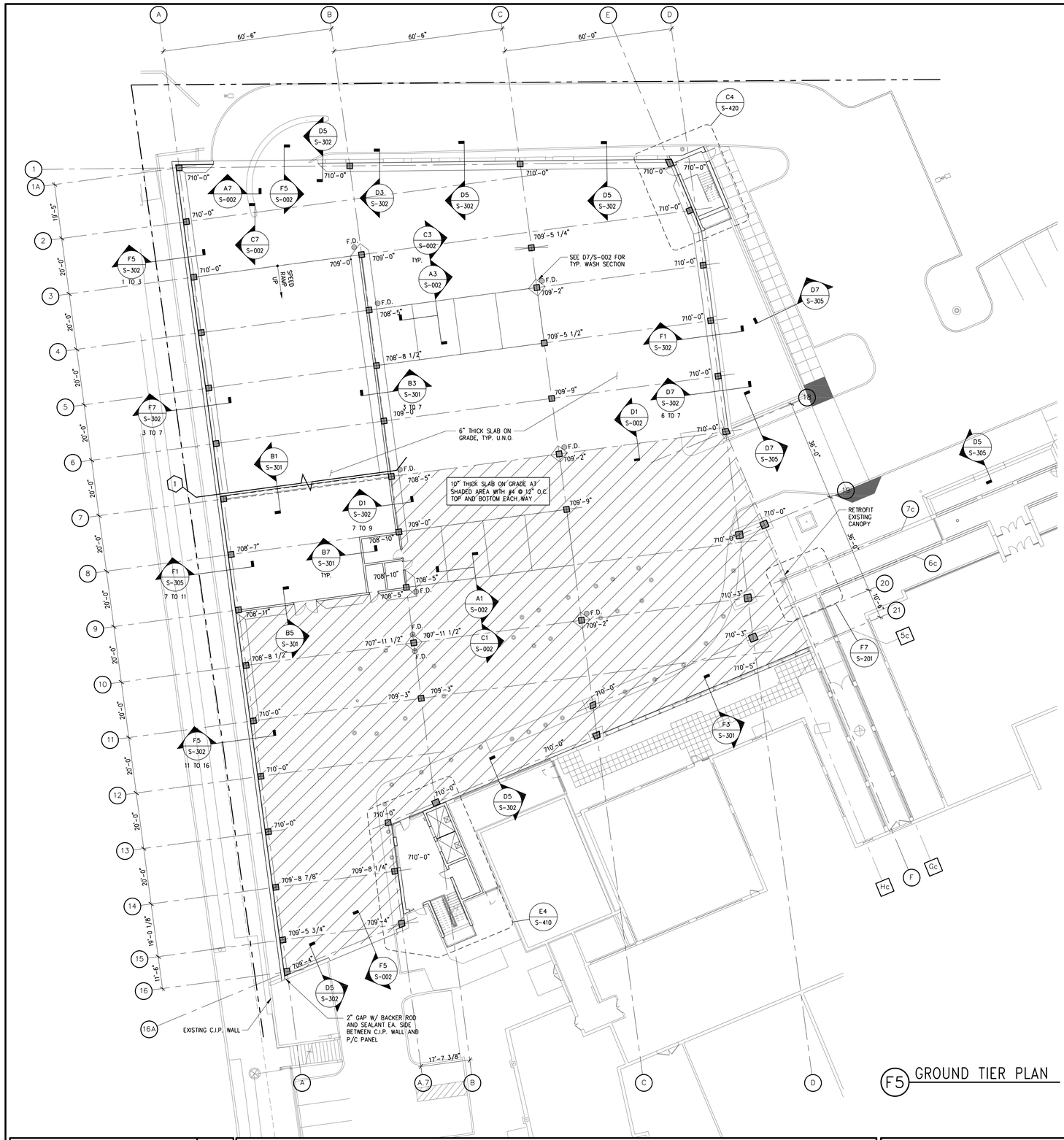

F5 GROUND TIER PLAN

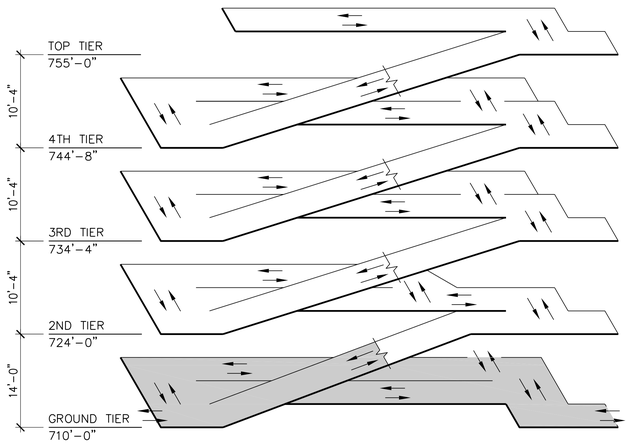

ISOMETRIC

SHEET NOTES:

1. FOR GENERAL NOTES SEE SHEET S-001.
2. FOR TYPICAL DETAILS SEE SHEET S-002.
3. FOR SUGGESTED POUR SEQUENCE SEE SHEET S-003.
4. FOR GARAGE ELEVATOR/STAIR AND STAIR TOWER PLANS, SEE S-400 SERIES SHEETS.
5. USE STRAIGHT LINE INTERPOLATION FOR FLOOR ELEVATIONS BETWEEN THOSE INDICATED.
6. FOR PLAN ELEVATION KEY SEE DETAIL D7/S-103.
7. FOR TYPICAL BAY PLAN, SEE SHEET DETAIL F7/S-103.
8. VERIFY ALL DIMENSIONS WITH ARCHITECTURAL DRAWINGS.
9. VERIFY ALL TOP OF SLAB ELEVATIONS AND LOCATION OF OPENINGS AND SIZES WITH ARCHITECTURAL DRAWINGS.
10. FOR FLOOR DRAIN DETAILS SEE PLUMBING DRAWINGS.
11. ALL COLUMNS ARE CENTERED ON GRID UNLESS NOTED.
12. TYPICAL SLAB ON GRADE SHALL BE 6" THICK WITH #4 @ 18" O.C. EACH WAY EXCEPT AT SHADED AREA WHICH IS 10" THICK WITH #4 @ 12" O.C. EACH WAY TOP AND BOTTOM. SLAB ON GRADE SHALL BE PLACED ON A STABLE SUBGRADE. SEE THE GEOTECHNICAL REPORT REFERENCED IN THE GENERAL NOTE SHEET S-001 FOR THE PREPARATION OF SUBGRADE.
13. PROVIDE 1/2" ISOLATION JOINT AND SEALANT AT INTERSECTION OF COLUMN AND CONCRETE SLAB ON GRADE. SEE DETAIL D7/S-002.
14. PROVIDE CONSTRUCTION OR CONTROL JOINTS IN C.I.P. WALLS PER D3/S-002 AND E3/S-002 TO MATCH JOINTS IN SLAB-ON-GRADE.
15. PROVIDE CORNER REINFORCEMENT FOR C.I.P. WALLS, FOOTINGS AND GRADE BEAMS PER F1/S-002 OR F3/S-002 AS REQUIRED, TYP.
16. SEE CIVIL DRAWINGS FOR EXTERIOR GRADE ELEVATIONS, UTILITIES AND ADJACENT STRUCTURES.
17. CONTRACTOR TO REFERENCE ARCHITECTURAL AND MEP PLANS FOR ALL DRAINS LOCATED IN OCCUPIED SPACES, INCLUDING ALL UTILTIY ROOMS. REFERENCE CIVIL DRAWINGS FOR DRIVE-THRU AREA.
18. FOLLOW THE GEOTECHNICAL REPORT REFERENCED IN THE GENERAL NOTES FOR SLAB-ON-GRADE SUBGRADE EXCAVATION AND CONSTRUCTION RECOMMENDATIONS.

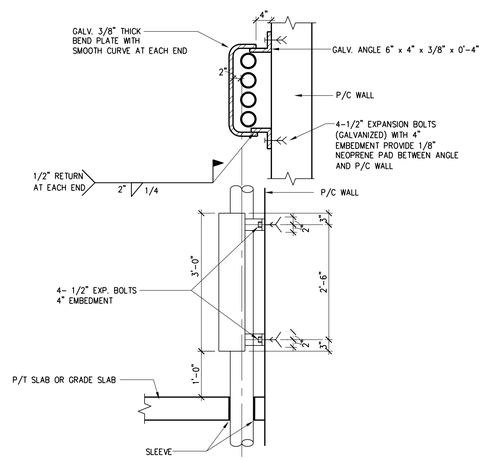

NOTE: SEE MEP DRAWINGS FOR PIPE LOCATIONS.

F7 PIPE GUARD DETAIL

NORTH

IT SHALL BE THE CONTRACTOR'S RESPONSIBILITY TO VERIFY THAT THERE IS A MINIMUM OF 11'-0" HEADROOM BETWEEN ALL DRIVING SURFACES AND OVERHEAD BEAMS PRIOR TO PLACING CONCRETE.

FINAL CONSTRUCTION DOCUMENTS	06/10/11
100% REVIEW SUBMISSION (NOT FOR CONSTRUCTION)	04/11/11
75% REVIEW SUBMISSION (NOT FOR CONSTRUCTION)	02/03/11
75% REVIEW SUBMISSION (NOT FOR CONSTRUCTION) - COST ESTIMATE	01/19/11
35% REVIEW SUBMISSION (NOT FOR CONSTRUCTION)	11/22/10
Revisions:	Date

VA FORM 08-6231

CONSULTANTS/ENGINEERS:

KJWW ENGINEERING CONSULTANTS
Mechanical/Electrical/Plumbing Engineer
623 26TH AVENUE
ROCK ISLAND, ILLINOIS 61201
309.788.0673 Telephone
309.786-5967 Fax

TERRACON
Geotechnical Engineer
2640 12TH STREET SW
CEDAR RAPIDS, IOWA 52404
319.366.8321 Telephone
319.366.0032 Fax

GRAEF
Civil Engineer/Landscape Architect
332 SOUTH MICHIGAN, SUITE 1400
CHICAGO, ILLINOIS 60604-4367
312.582.2020 Telephone
312.939.7014 Fax

WALKER PARKING CONSULTANTS
Structural Engineer
505 DAVIS ROAD
ELGIN, ILLINOIS 60123
847.697.2640 Telephone
847.697.7439 Fax

FAITHFUL+GOULD
Cost Management
222 SOUTH RIVERSIDE PLAZA, SUITE 2240
CHICAGO, ILLINOIS 60606
312.612.6319 Telephone
312.655.9037 Fax

ARCHITECT:

Loebl Schlossman & Hackl
Architecture • Planning • Interiors

233 North Michigan Avenue
Suite 3000
Chicago, Illinois 60601

312.565.1800 Telephone
312.565.5912 Facsimile
www.lshdesign.com

Copyright © 2010 Loebl Schlossman & Hackl Inc.

Drawing Title: GROUND TIER PLAN

Project Title: 400 CAR PARKING GARAGE

Project Number: 636-402

Building Number: 43

Approved: Project Director
Iowa City VA Healthcare System
Department of Veterans Affairs Medical Center

Location: IOWA CITY, IA

Date: 06/10/2011 | Checked: BFN | Drawn: MJK

Drawing Number: S-101

Dwg. 83 of 152

Office of Construction and Facilities Management

Department of Veterans Affairs