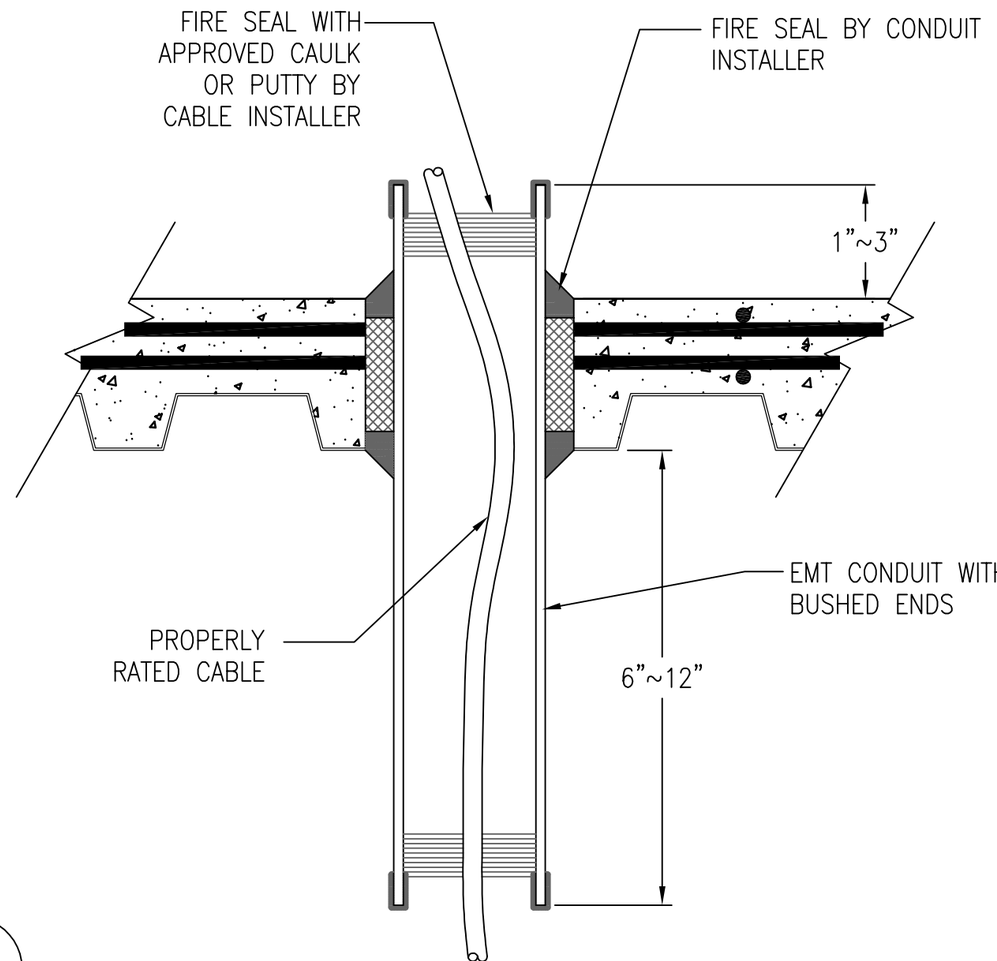

2
T001 SCALE: NONE

DiClemente Siegel Design Inc.
Engineering and Architecture
28105 Greenfield Road, Southfield, Michigan 48076-3046
248.569.1430 Fax 248.569.0096

VA ANN ARBOR HEALTHCARE SYSTEM (VAAAHS)
IT INFRASTRUCTURE UPGRADE
PHASE II - CAMPUS WIDE
ANN ARBOR, MI

DRAWN BY: TJK
PM / PIC: NDG/LAT
DATE: 5/31/2012
PROJECT NUMBER: 10-2901.32
FILE NAME: 2100-T001
SHEET NUMBER: SKT-003

© 2012 DiClemente Siegel Design Inc.