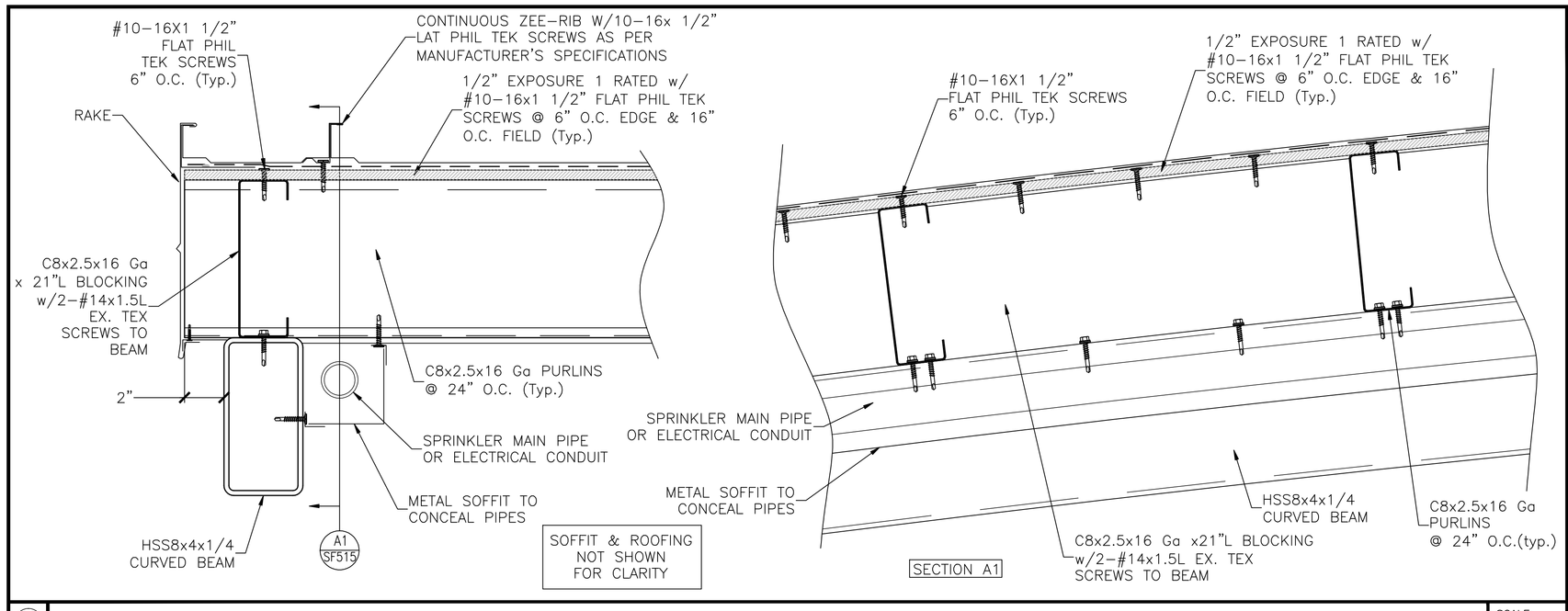

(A) PURLINS TO CURVED BEAM SUPPORT DETAIL — SCALE: 3" = 1'-0"

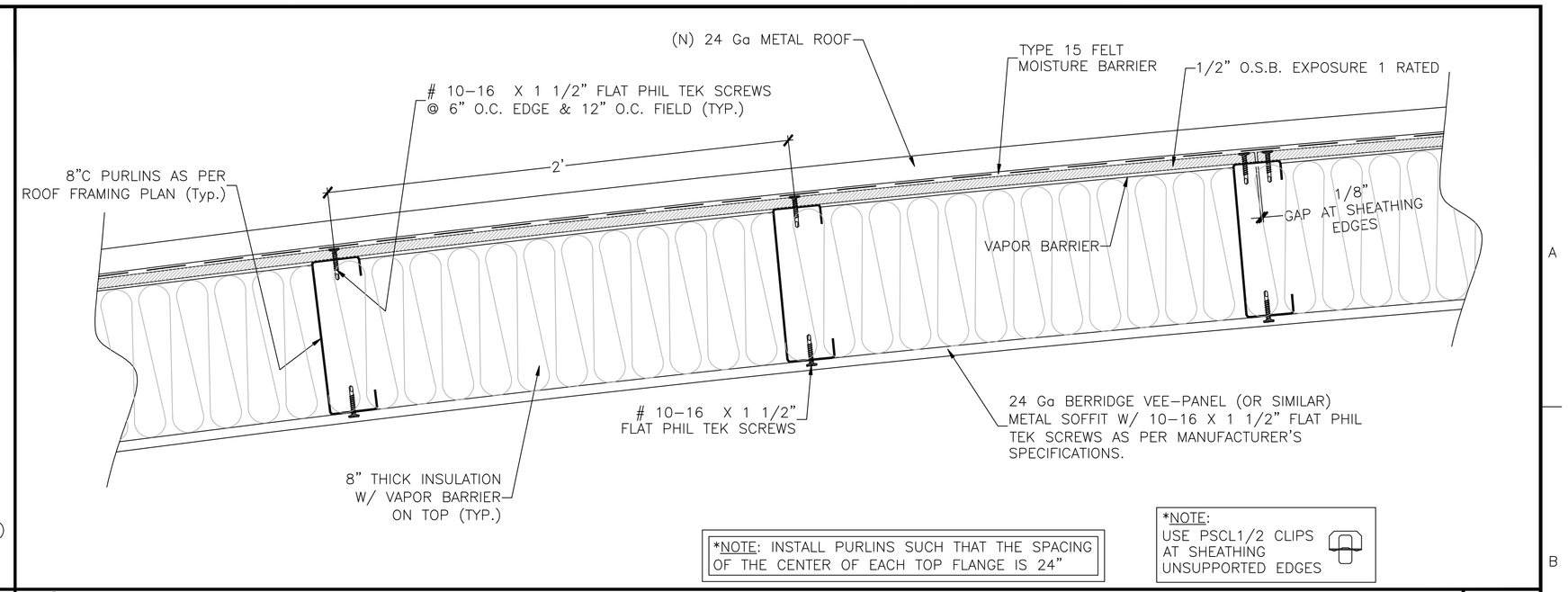

(B) ROOF PURLINS & COMPONENTS DETAIL — SCALE: 3" = 1'-0"

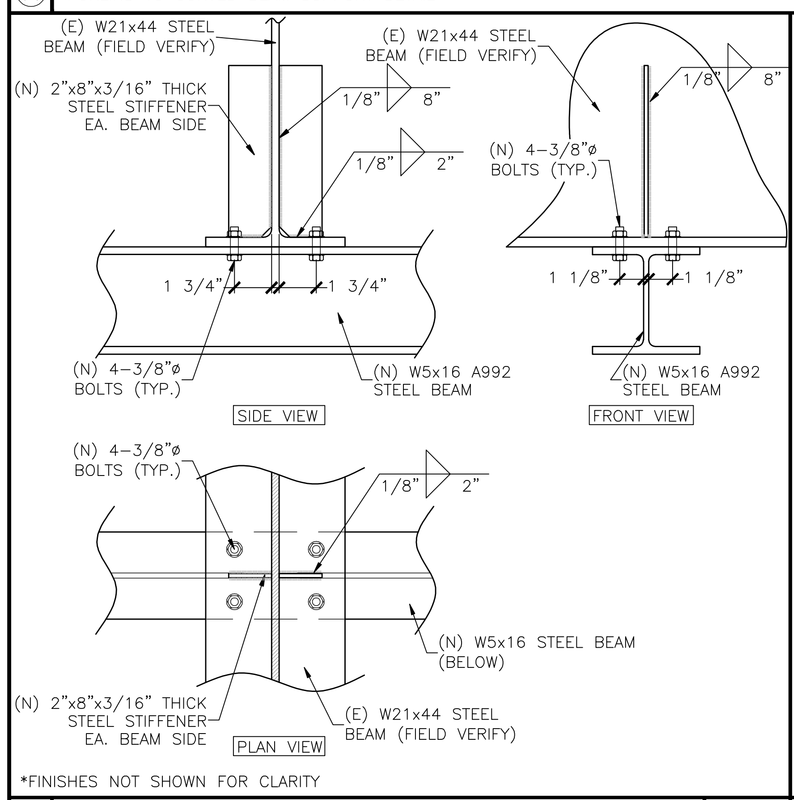

*FINISHES NOT SHOWN FOR CLARITY

(C) CANOPY 4 – NEW BEAN TO EXISTING BRIDGE BEAM CONNECTION DETAIL — SCALE: 3" = 1'-0"

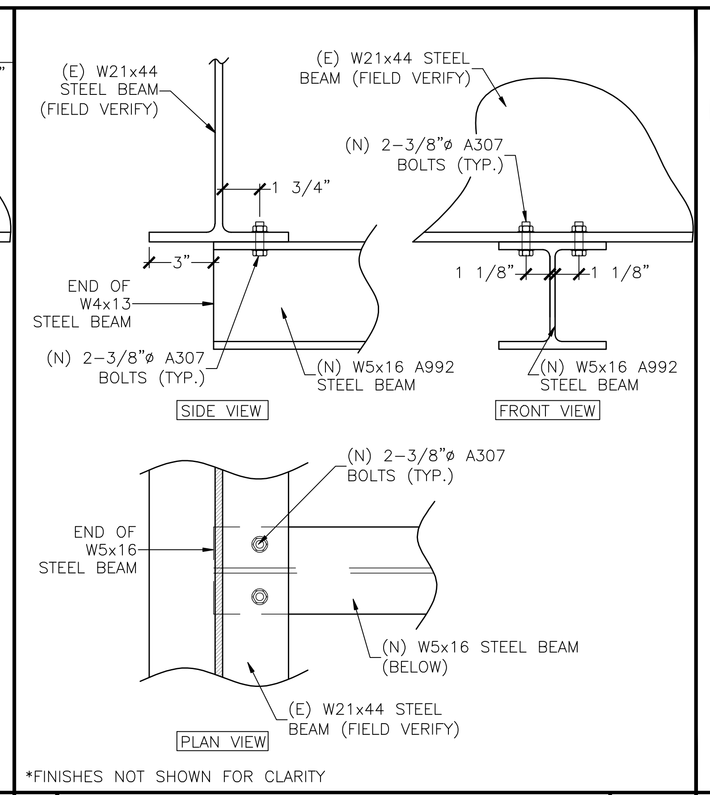

*FINISHES NOT SHOWN FOR CLARITY

(D) CANOPY 4 – NEW BEAN TO EXISTING BRIDGE BEAM END CONNECTION DETAIL — SCALE: 3" = 1'-0"

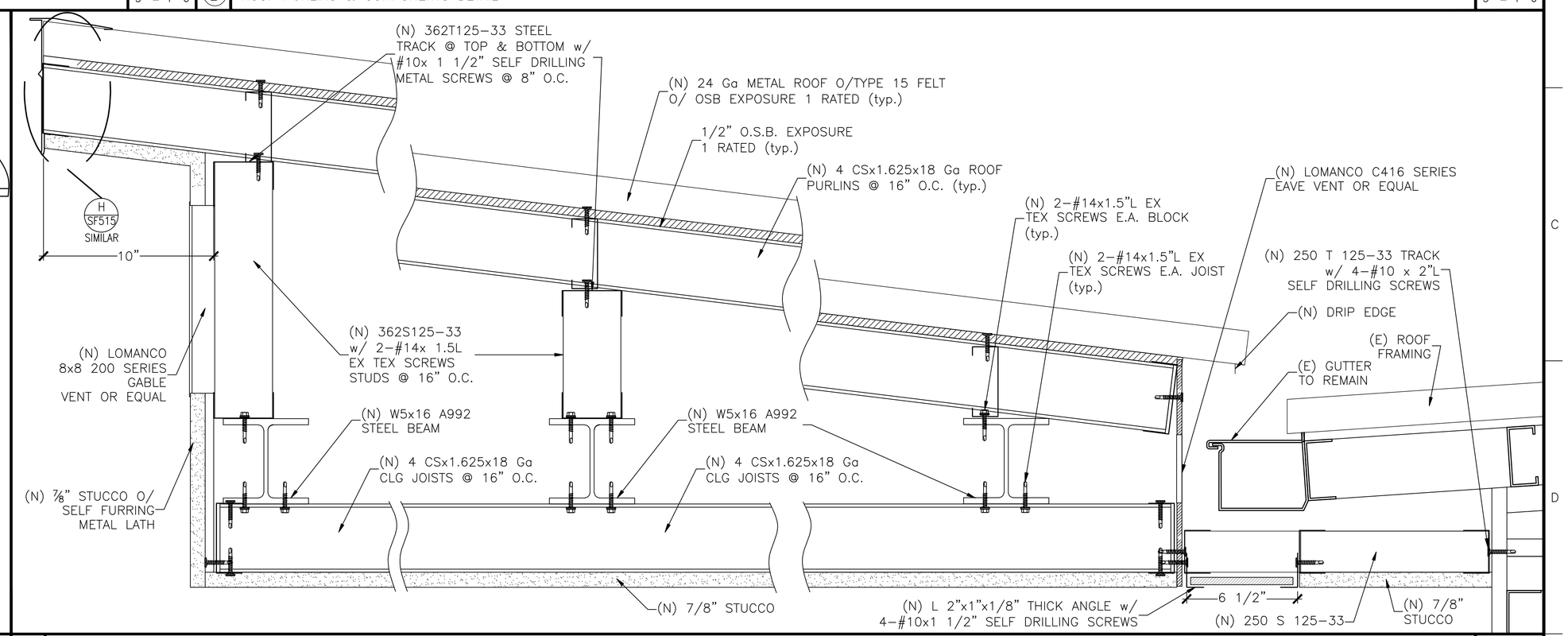

(E) CANOPY 4 – SECTION — SCALE: 3" = 1'-0"

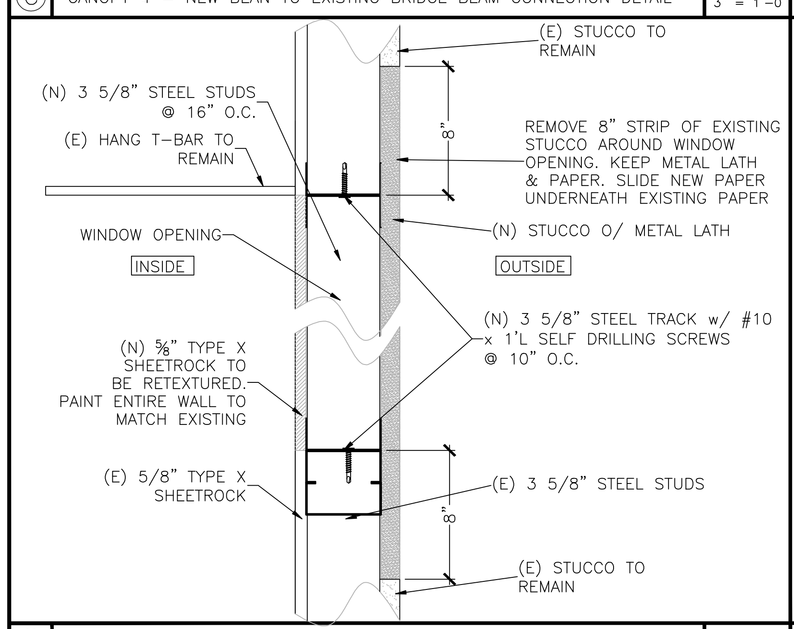

(F) WINDOW @ BRIDGE LEVEL TO BE REMOVED & COVERED – DETAIL — SCALE: 3" = 1'-0"

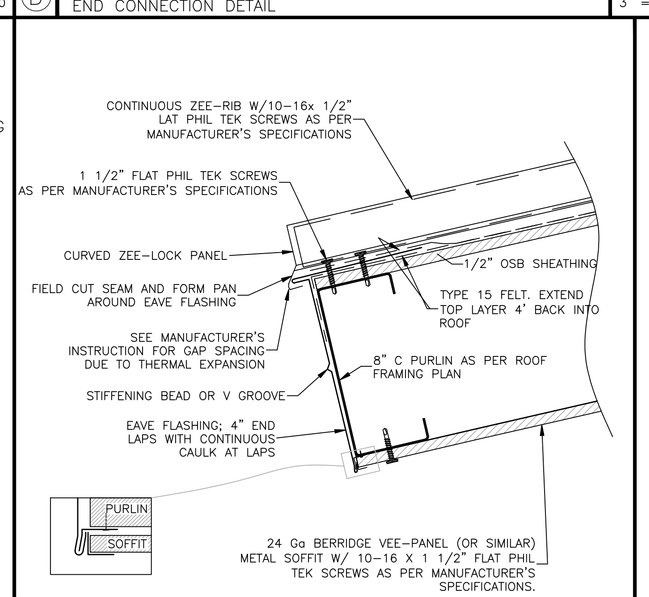

(G) CANOPY FASCIA DETAIL — SCALE: 3" = 1'-0"

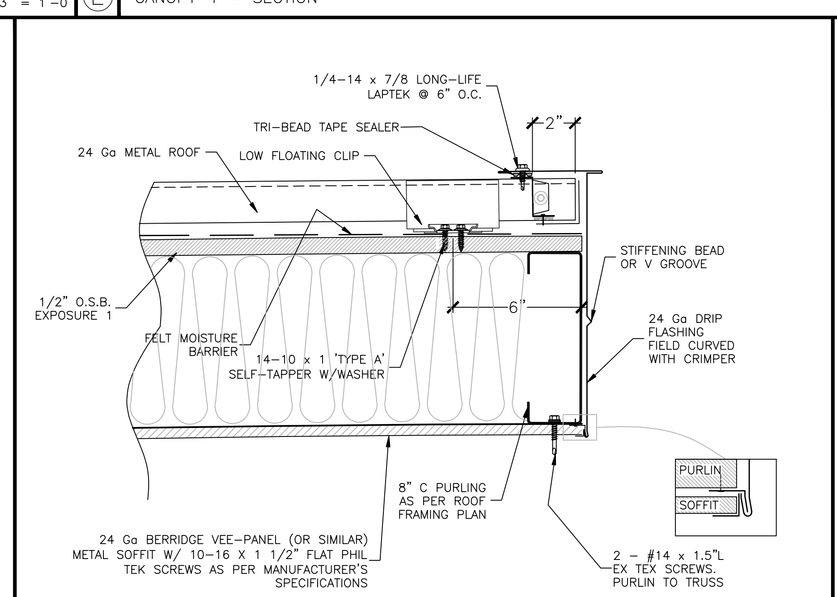

(H) CANOPY ROOF UPPER END DETAIL — SCALE: 3" = 1'-0"

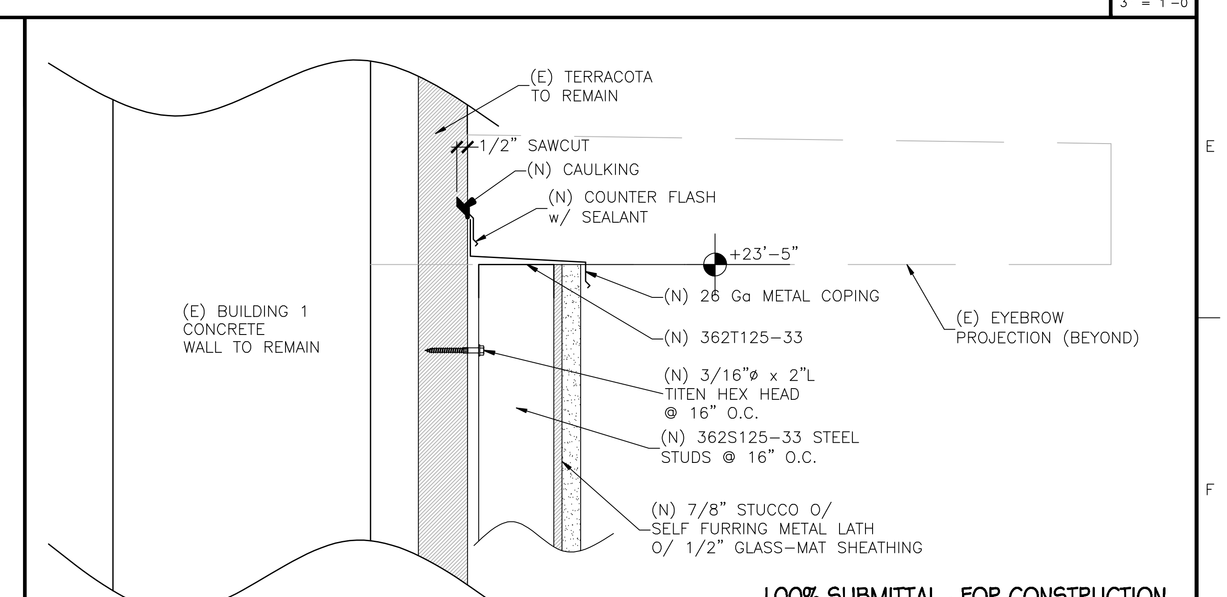

100% SUBMITTAL - FOR CONSTRUCTION

(I) FURRING WALL – TOP CONNECTION AT NORTHEAST CORNER — SCALE: 3" = 1'-0"

Revisions:	Date

CONSULTANTS:

REGISTERED PROFESSIONAL ENGINEER ESKBAN T. PAULI No.C51761 Exp. 6-30-12 CIVIL STATE OF CALIFORNIA

ARCHITECT/ENGINEERS:

PAULI ENGINEERING, INC.
944 N. VAN NESS AVE., FRESNO, CA 93728
PH: (559)237-4408 - FAX: (559)237-4409
E-MAIL: paulienginering@sbcglobal.net
www.paulienginering.com

Drawing Title: ATRIUM CANOPIES STRUCTURAL DETAILS

Approved Project Director

Project Title: BUILDING 1 - CANOPIES AT ATRIUM WITH FLAT WORK IMPROVEMENT

Location: 2615 E. Clinton Ave, Fresno, CA

Date: 05-07-2012 | Checked | Drawn

Project Number: 570-11-123

Building Number: Building 1

Drawing Number: SF515

Dwg. of –

Office of Construction and Facilities Management

Department of Veterans Affairs

VA FORM 08-6231