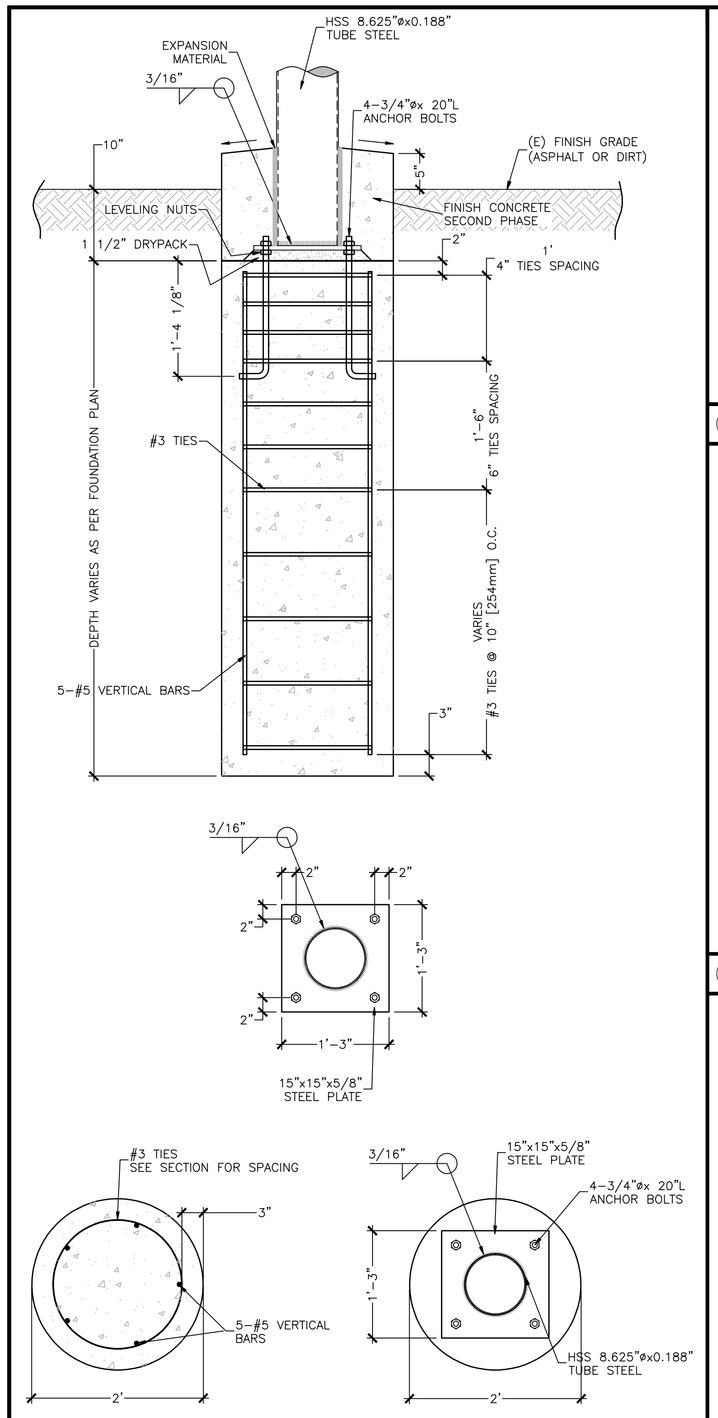

A PIER DETAIL — SCALE: 1" = 1'-0"

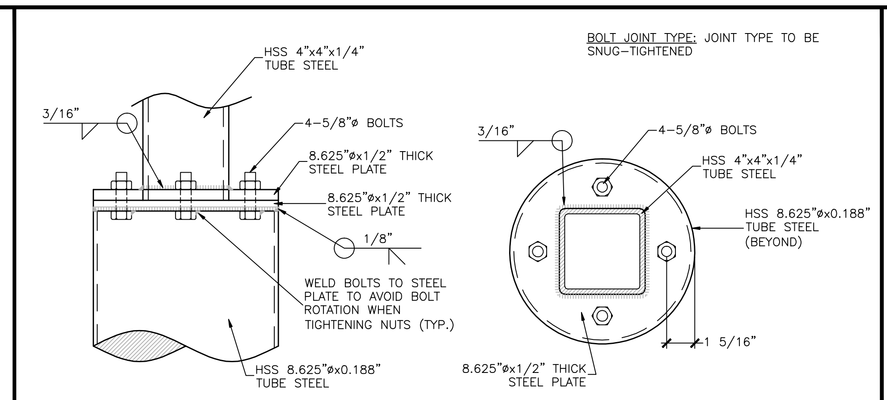

B TRUSS TO COLUMN DETAIL — SCALE: 3" = 1'-0"

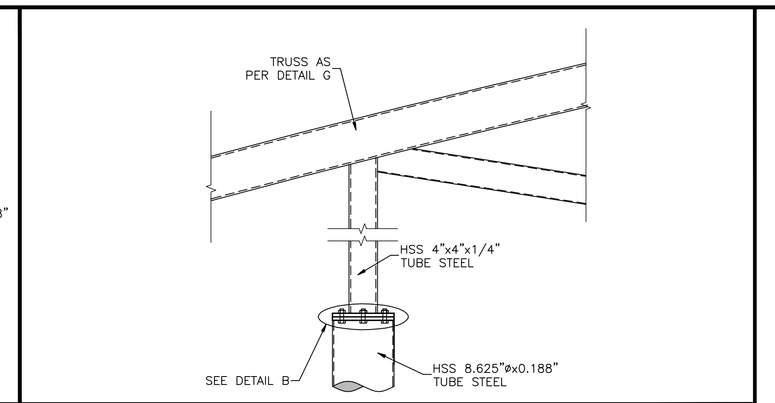

C TRUSS TO COLUMN DETAIL — SCALE: 1" = 1'-0"

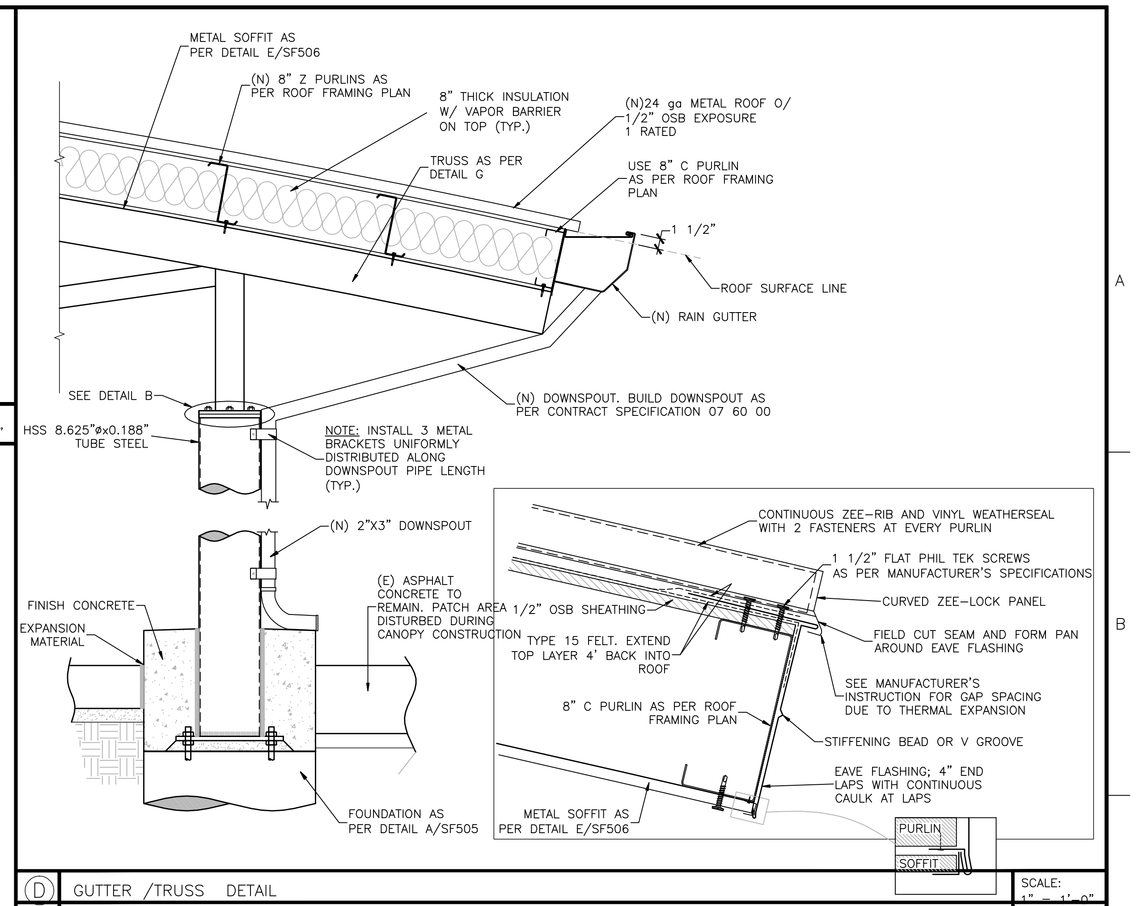

D GUTTER /TRUSS DETAIL — SCALE: 1" = 1'-0"

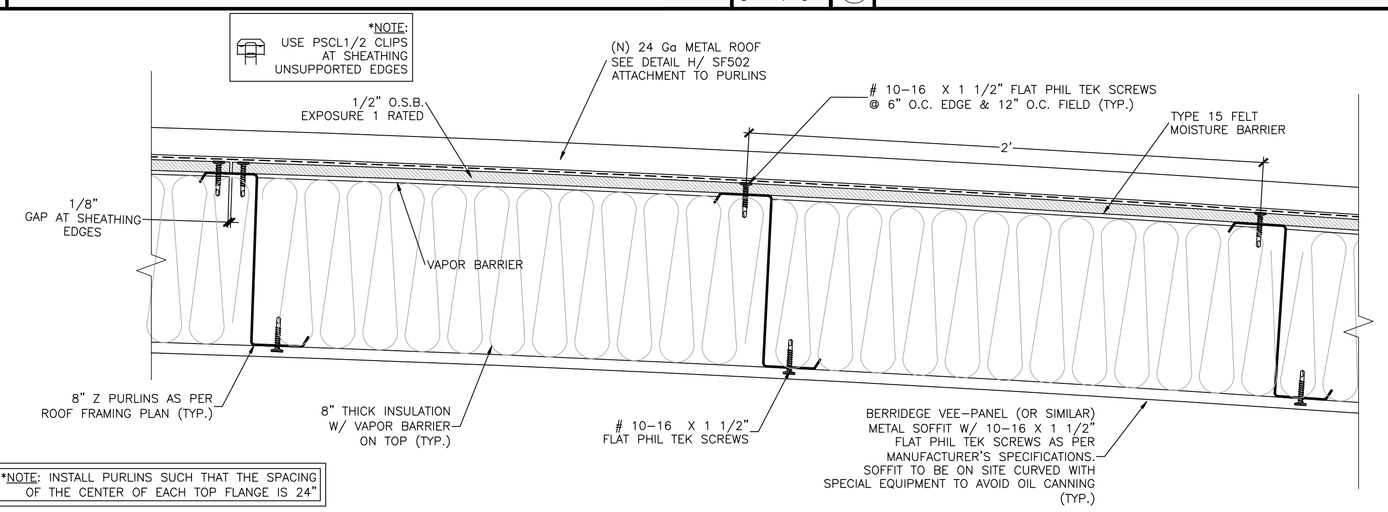

E ROOF PURLINS & COMPONENTS DETAIL — SCALE: 3" = 1'-0"

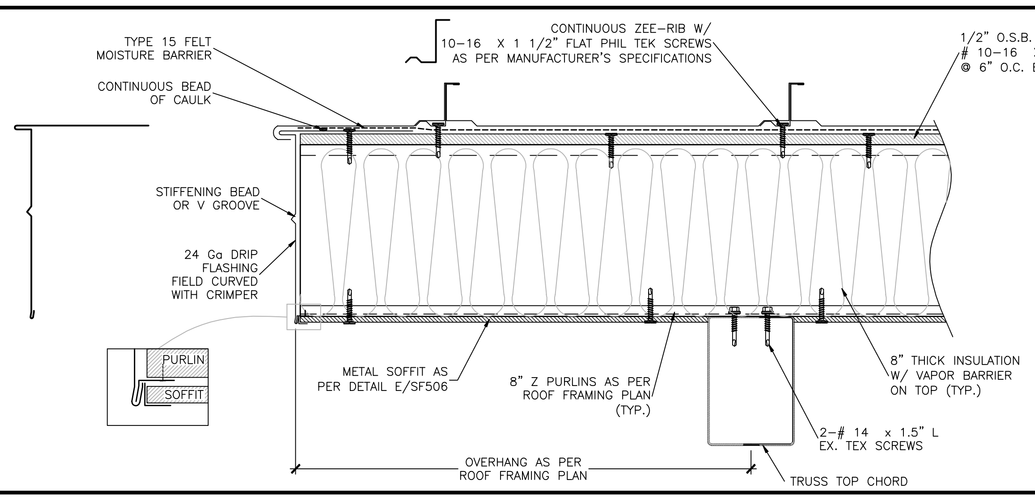

F ROOF PURLINS OVERHANG — SCALE: 3" = 1'-0"

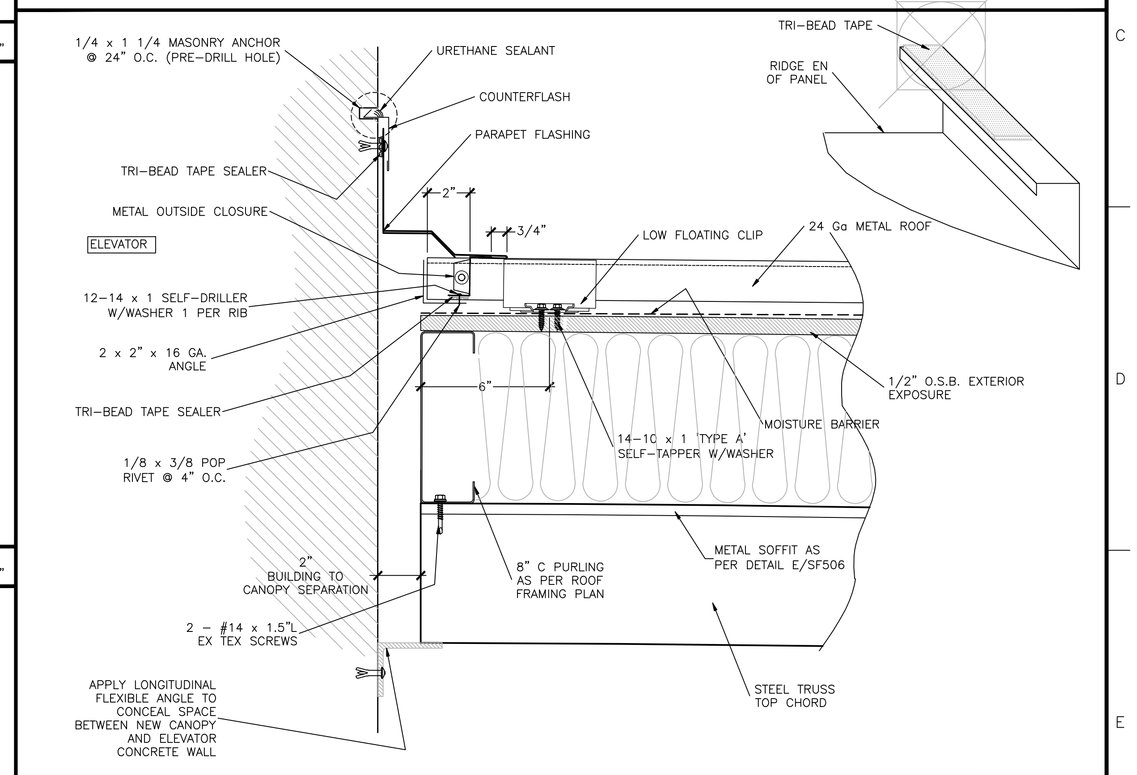

H FLASHING DETAIL AT TRANSITION BETWEEN CANOPY AND EXISTING BUILDING — SCALE: 3" = 1'-0"

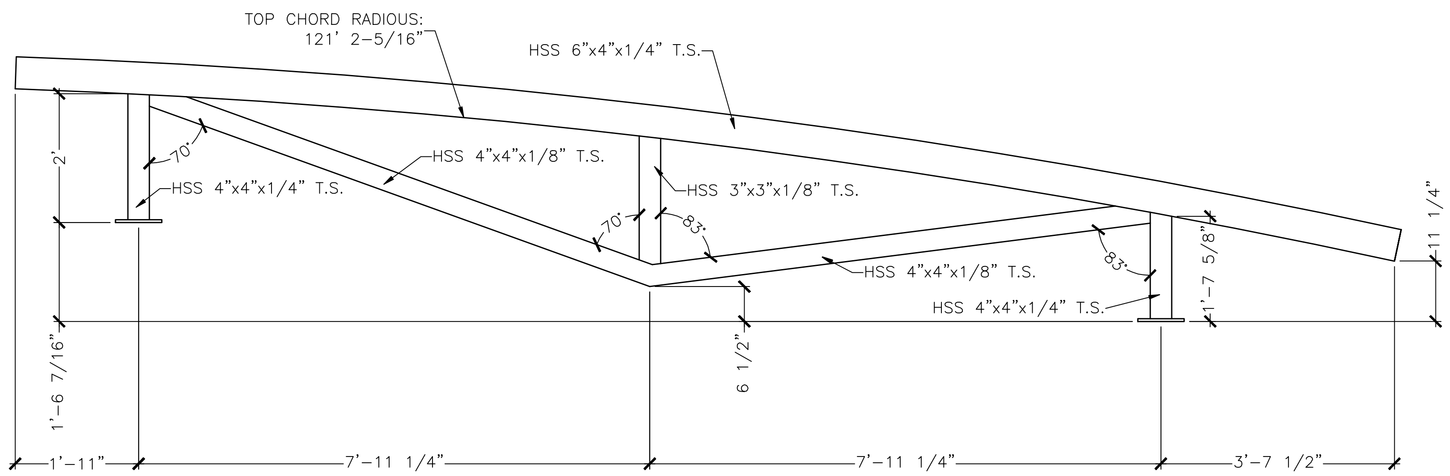

G TRUSS #3 DETAIL — SCALE: 3/4" = 1'-0"

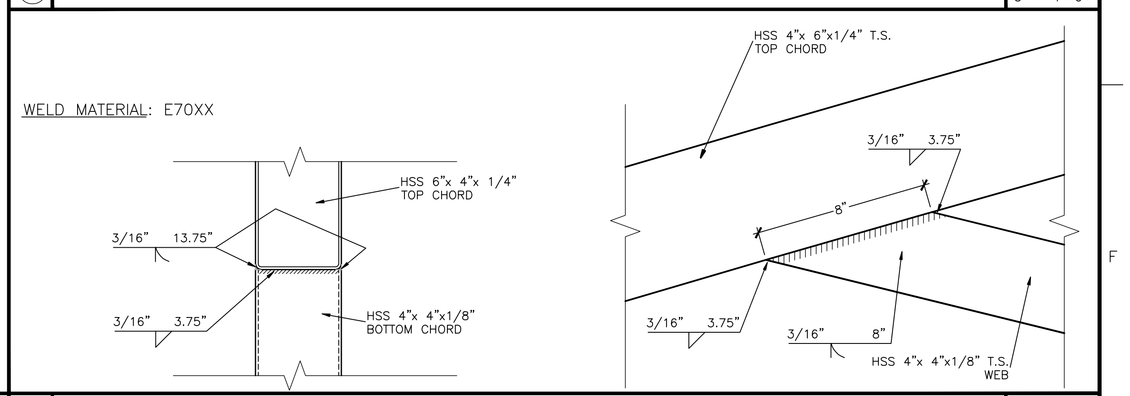

I TYPICAL CHORD CONNECTION WELDING DETAIL — SCALE: 3" = 1'-0"

100% SUBMITTAL - FOR CONSTRUCTION

Revisions:	Date

CONSULTANTS:

REGISTERED PROFESSIONAL ENGINEER — ESKRAN T. PAULI — No.C51781 Exp. 6-30-12 — CIVIL — STATE OF CALIFORNIA

ARCHITECTS/ENGINEERS:

PAULI ENGINEERING, INC.
944 N. VAN NESS AVE., FRESNO, CA 93728
PH: (559)237-4408 - FAX: (559)237-4409
E-MAIL: paulienginneering@sbcglobal.net
www.paulienginneering.com

Drawing Title: WEST PARKING CANOPY STRUCTURAL DETAILS

Approved Project Director

Project Title: CANOPIES AT ER ENTRANCE AREA AND FLAT WORK IMPROVEMENTS

Location: 2615 E. Clinton Ave, Fresno, CA

Date: 05-07-2012 | Checked | Drawn

Project Number: 570-11-123

Building Number: Building 1

Drawing Number: SF506

Dwg. of —

Office of Construction and Facilities Management

Department of Veterans Affairs

VA FORM 08-6231