Wireless Medical Telemetry System Configuration

NIHON KOHDEN
15353 Barranca Pkwy
Irvine, CA 92618
(800) 325-0283

VA Medical Center
Wilmington, DE
1st Floor - Telemetry

NOTE: Any changes or modifications to this design must be approved in writing by the NKA Technical Department

Designed by: Nihon Kohden Design Planning Dept. Date: 11/07/16

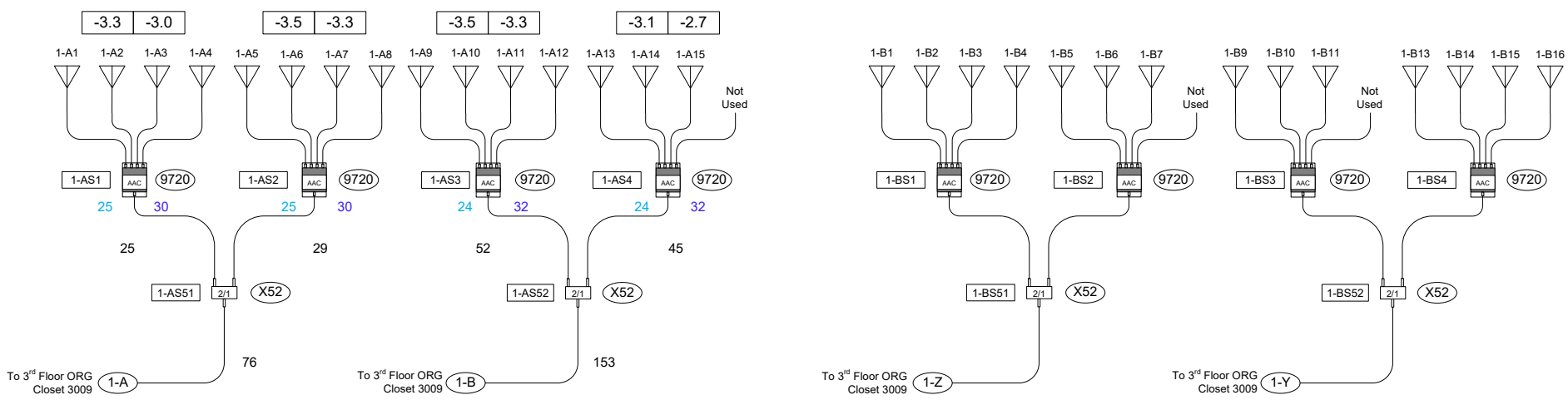

Equipment Legend:

- SL60144P-NK1 - Antenna
- TT-5900 - Terminator
- Attenuator - x dB
- X54 — SP-2X54 - 4/1 Splitter -8.5dB/-9.0dB
- X52 — SP-2X52 - 2/1 Splitter -4.2dB/-5.5dB
- HRS8 — NK-HR S8 - 8/1 Splitter -11.0dB/-14.4dB
- 9720 — UM-9720 – Amplifier Dual Band Variable Gain
- Addition/New Equipment
- Existing Equipment or New Install
- PS-3015 Power Supply -1dB/-2dB

Wireless Medical Telemetry System Configuration

NIHON KOHDEN
15353 Barranca Pkwy
Irvine, CA 92618
(800) 325-0283

VA Medical Center
Wilmington, DE
2nd Floor - Telemetry

NOTE: Any changes or modifications to this design must be approved in writing by the NKA Technical Department

Designed by: Nihon Kohden Design Planning Dept. Date: 11/07/16

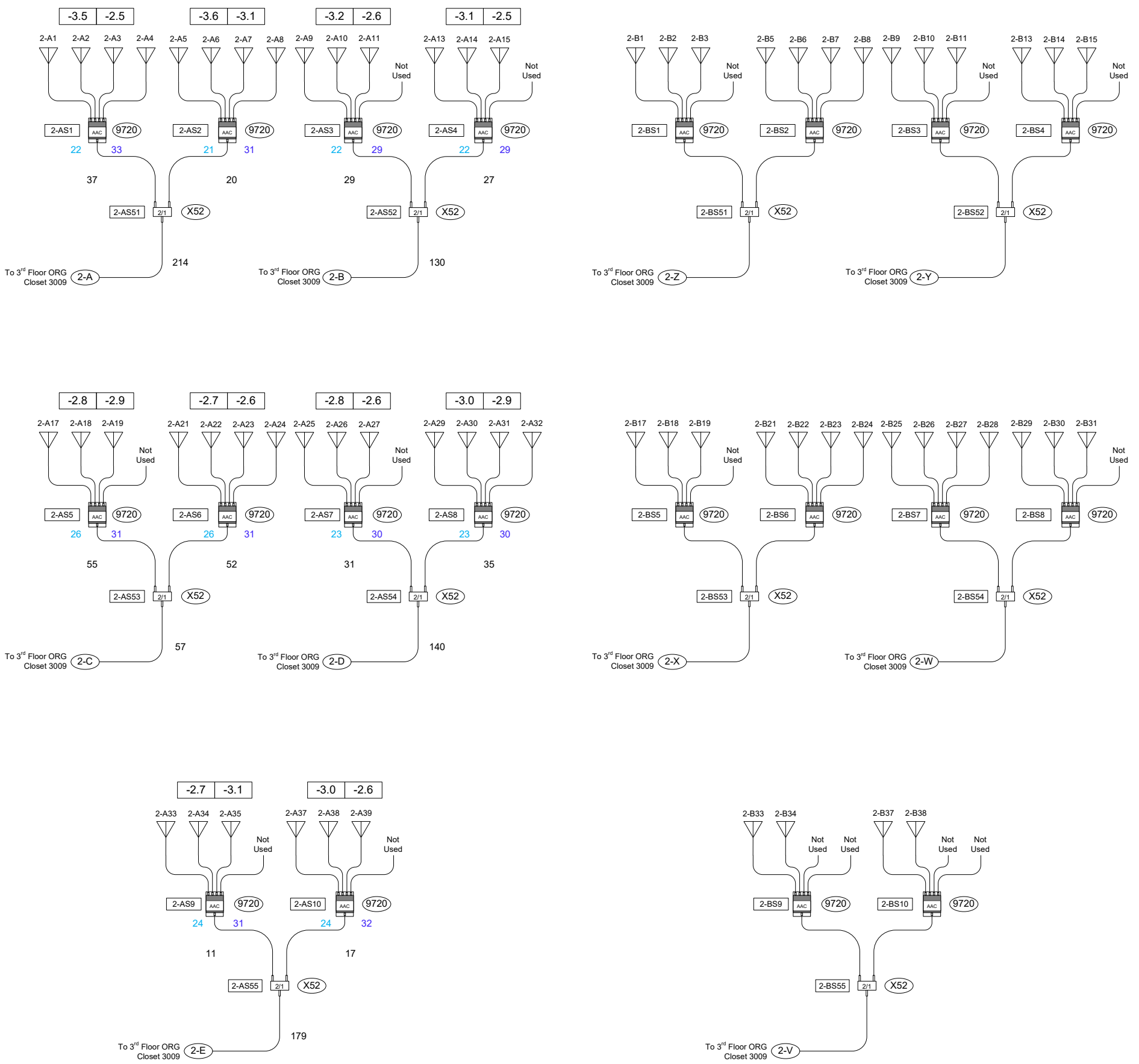

Equipment Legend:

- SL60144P-NK1 - Antenna
- TT-5900 - Terminator
- Attenuator - x dB
- X54 — SP-2X54 - 4/1 Splitter -8.5dB/-9.0dB
- X52 — SP-2X52 - 2/1 Splitter -4.2dB/-5.5dB
- HRS8 — NK-HR S8 - 8/1 Splitter -11.0dB/-14.4dB
- 9720 — UM-9720 – Amplifier Dual Band Variable Gain
- Addition/New Equipment
- Existing Equipment or New Install
- PS-3015 Power Supply -1dB/-2dB

Wireless Medical Telemetry System Configuration

NIHON KOHDEN
15353 Barranca Pkwy
Irvine, CA 92618
(800) 325-0283

VA Medical Center
Wilmington, DE
3rd Floor - Telemetry

NOTE: Any changes or modifications to this design must be approved in writing by the NKA Technical Department

Designed by: Nihon Kohden Design Planning Dept. Date: 11/07/16

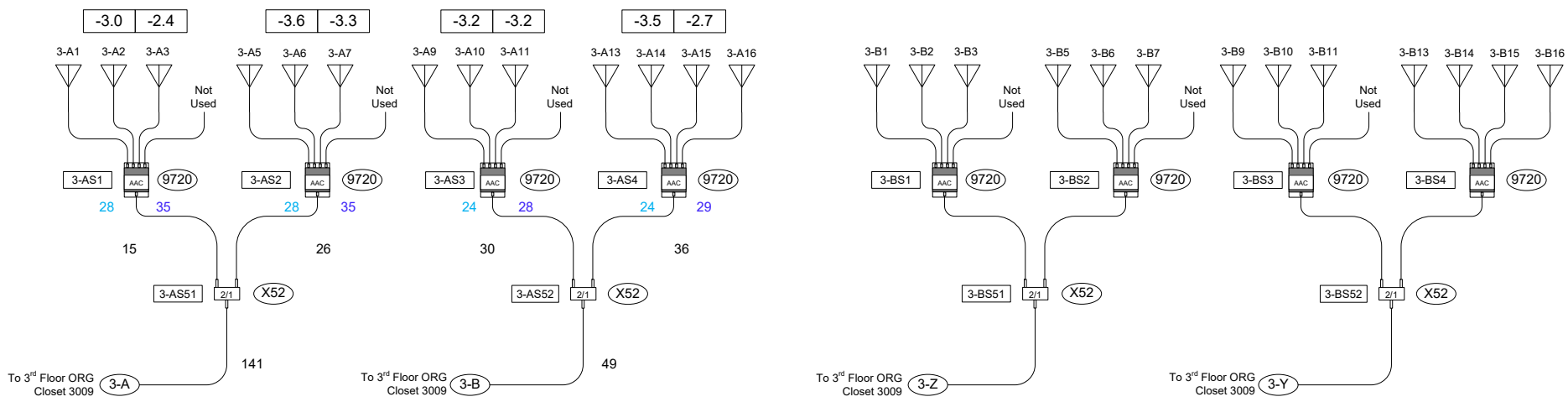

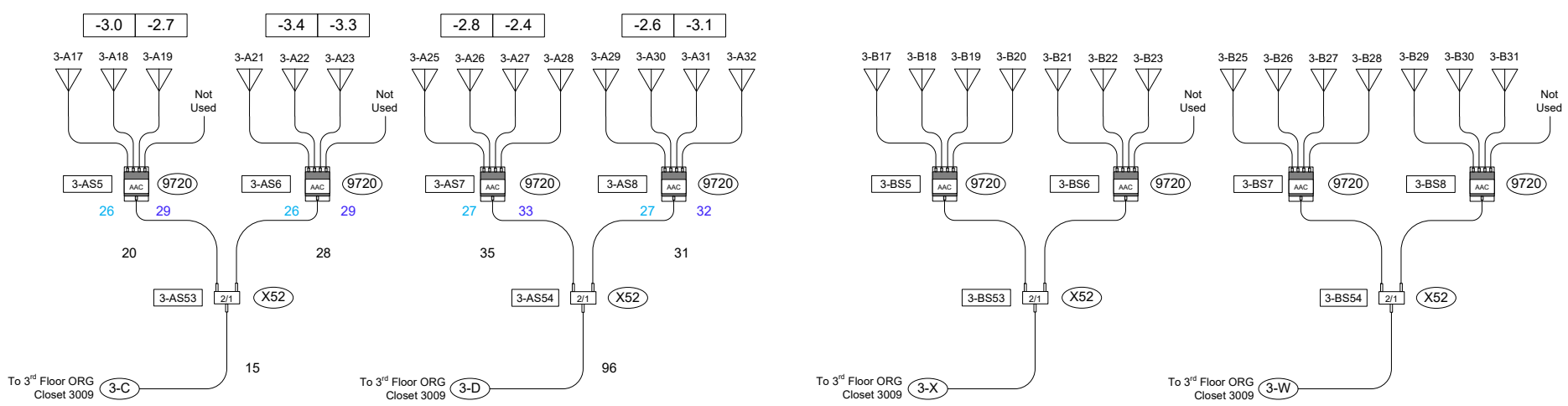

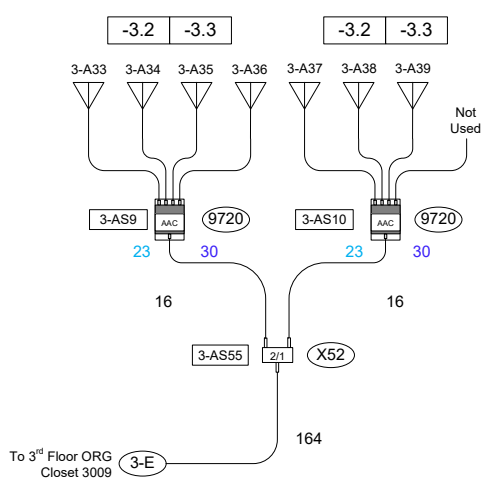

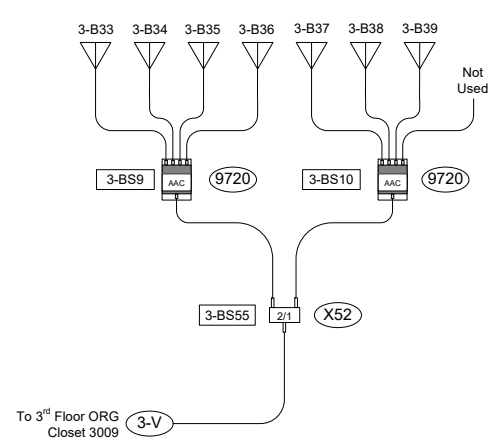

Equipment Legend:

- SL60144P-NK1 - Antenna
- TT-5900 - Terminator
- Attenuator - x dB
- 4/1 X54 — SP-2X54 - 4/1 Splitter -8.5dB/-9.0dB
- 2/1 X52 — SP-2X52 - 2/1 Splitter -4.2dB/-5.5dB
- 8/1 HRS8 — NK-HR S8 - 8/1 Splitter -11.0dB/-14.4dB
- AAC 9720 — UM-9720 – Amplifier Dual Band Variable Gain
- Addition/New Equipment
- Existing Equipment or New Install
- Power Supply 1.5A — PS-3015 Power Supply -1dB/-2dB

Wireless Medical Telemetry System Configuration

NIHON KOHDEN
15353 Barranca Pkwy
Irvine, CA 92618
(800) 325-0283

VA Medical Center
Wilmington, DE
4th Floor - Telemetry

NOTE: Any changes or modifications to this design must be approved in writing by the NKA Technical Department

Designed by: Nihon Kohden Design Planning Dept. Date: 11/07/16

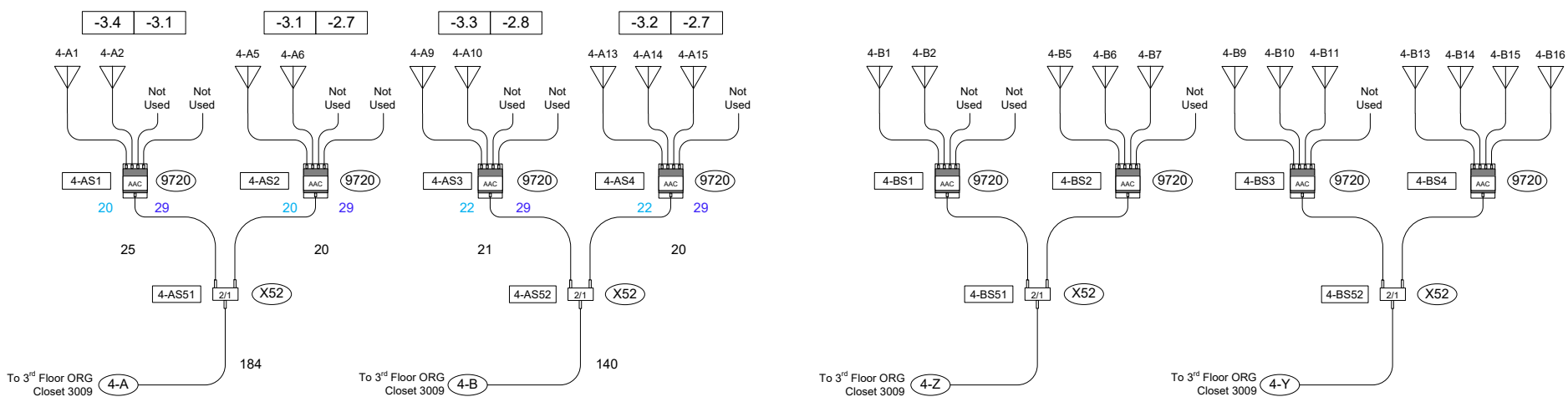

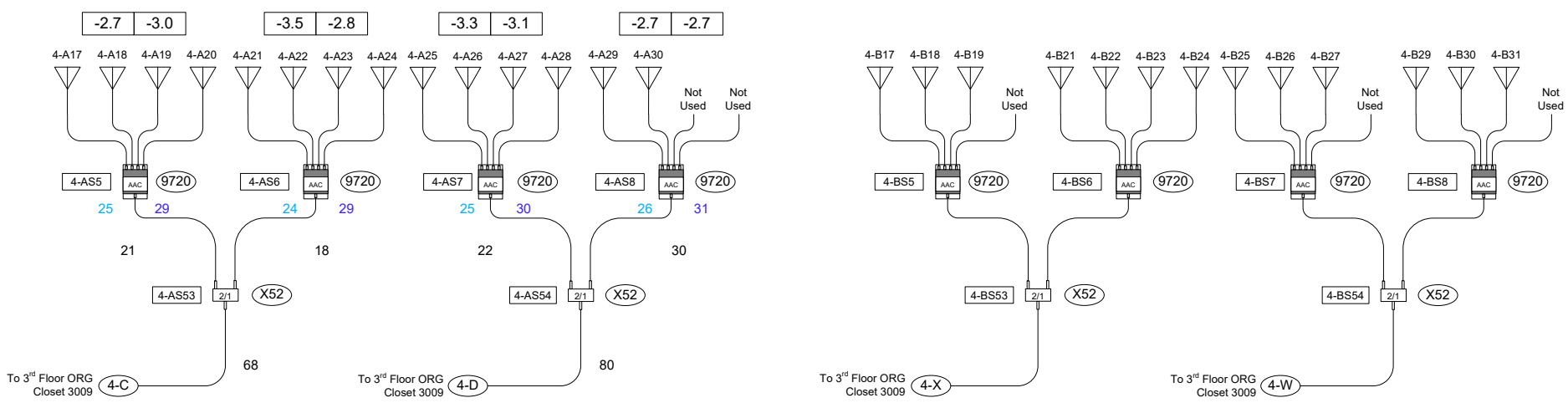

Equipment Legend:

SL60144P-NK1 - Antenna	4/1 X54 SP-2X54 - 4/1 Splitter -8.5dB/-9.0dB	AAC 9720 UM-9720 – Amplifier Dual Band Variable Gain
TT-5900 - Terminator	2/1 X52 SP-2X52 - 2/1 Splitter -4.2dB/-5.5dB	Addition/New Equipment
Attenuator - x dB	8/1 HRS8 NK-HR S8 - 8/1 Splitter -11.0dB/-14.4dB	Existing Equipment or New Install
		Power Supply 1.5A PS-3015 Power Supply -1dB/-2dB

Wireless Medical Telemetry System Configuration

NIHON KOHDEN
15353 Barranca Pkwy
Irvine, CA 92618
(800) 325-0283

VA Medical Center
Wilmington, DE
3rd Floor – ORG Closet 3009 (A-Side)

NOTE: Any changes or modifications to this design must be approved in writing by the NKA Technical Department

Designed by: Nihon Kohden Design Planning Dept. Date: 11/07/16

A-Side

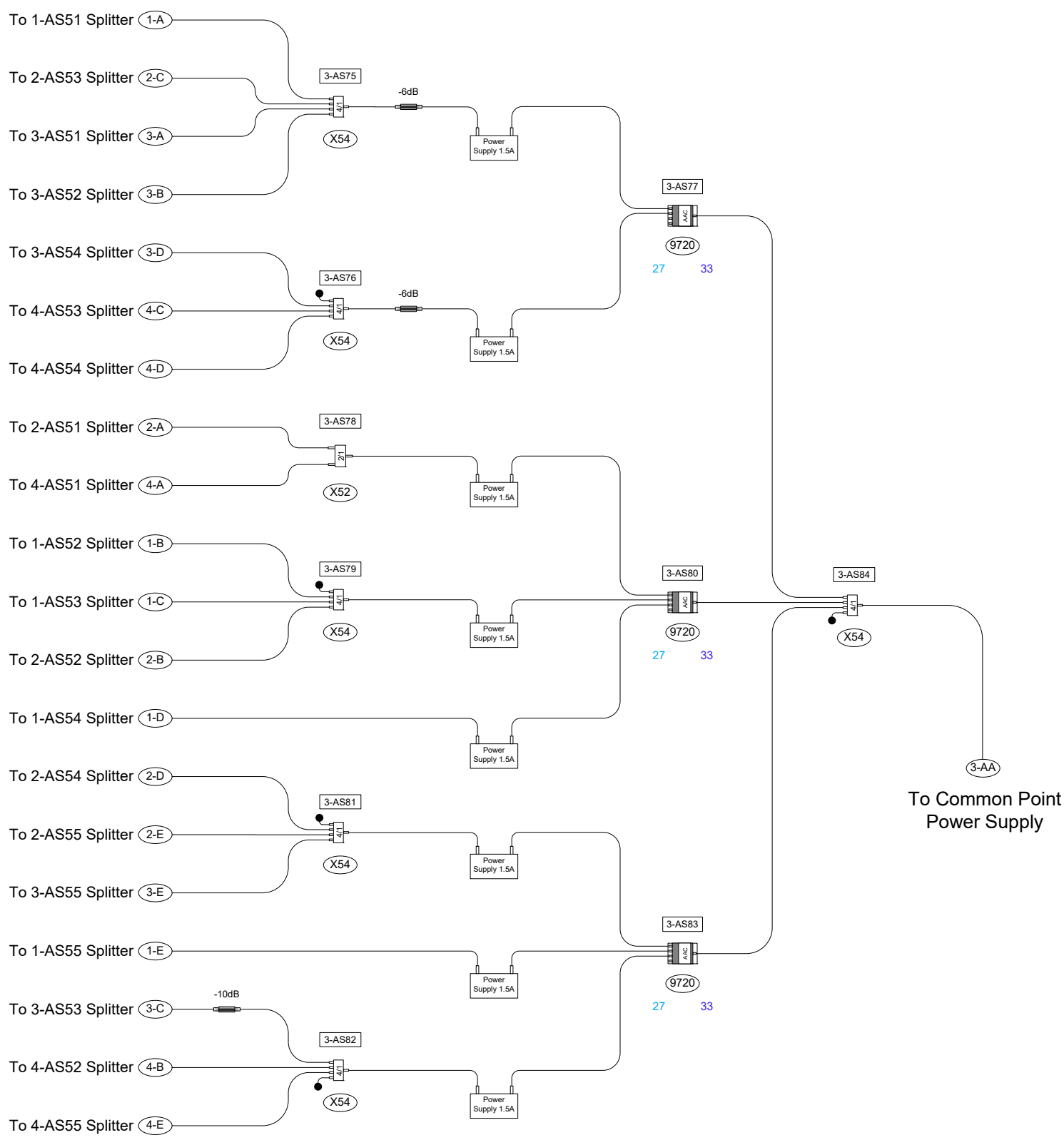

Equipment Legend:

- SL60144P-NK1 - Antenna
- TT-5900 - Terminator
- Attenuator - x dB
- X54 — SP-2X54 - 4/1 Splitter -8.5dB/-9.0dB
- X52 — SP-2X52 - 2/1 Splitter -4.2dB/-5.5dB
- HRS8 — NK-HR S8 - 8/1 Splitter -11.0dB/-14.4dB
- 9720 — UM-9720 – Amplifier Dual Band Variable Gain
- Addition/New Equipment
- Existing Equipment or New Install
- Power Supply 1.5A — PS-3015 Power Supply -1dB/-2dB

Wireless Medical Telemetry System Configuration

NIHON KOHDEN
15353 Barranca Pkwy
Irvine, CA 92618
(800) 325-0283

VA Medical Center
Wilmington, DE
3rd Floor – ORG Closet 3009 (B-Side)

NOTE: Any changes or modifications to this design must be approved in writing by the NKA Technical Department

Designed by: Nihon Kohden Design Planning Dept. Date: 11/07/16

B-Side

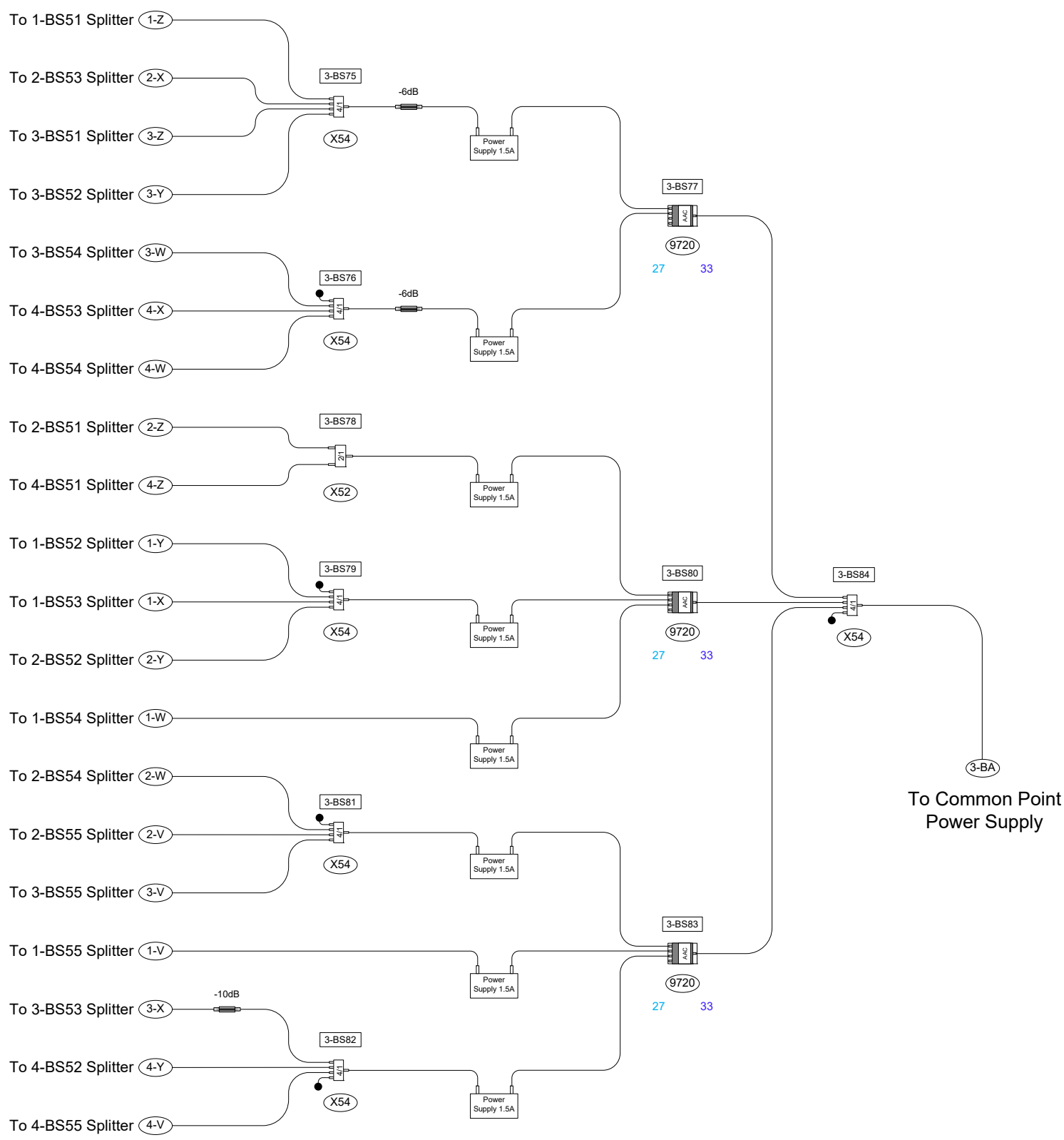

Equipment Legend:

- SL60144P-NK1 - Antenna
- TT-5900 - Terminator
- Attenuator - x dB
- X54 — SP-2X54 - 4/1 Splitter -8.5dB/-9.0dB
- X52 — SP-2X52 - 2/1 Splitter -4.2dB/-5.5dB
- HRS8 — NK-HR S8 - 8/1 Splitter -11.0dB/-14.4dB
- 9720 — UM-9720 – Amplifier Dual Band Variable Gain
- Addition/New Equipment
- Existing Equipment or New Install
- Power Supply 1.5A — PS-3015 Power Supply -1dB/-2dB

Wireless Medical Telemetry System Configuration

NIHON KOHDEN
15353 Barranca Pkwy
Irvine, CA 92618
(800) 325-0283

VA Medical Center
Wilmington, DE
3rd Floor – ORG Closet 3009

NOTE: Any changes or modifications to this design must be approved in writing by the NKA Technical Department

Designed by: Nihon Kohden Design Planning Dept. Date: 11/07/16

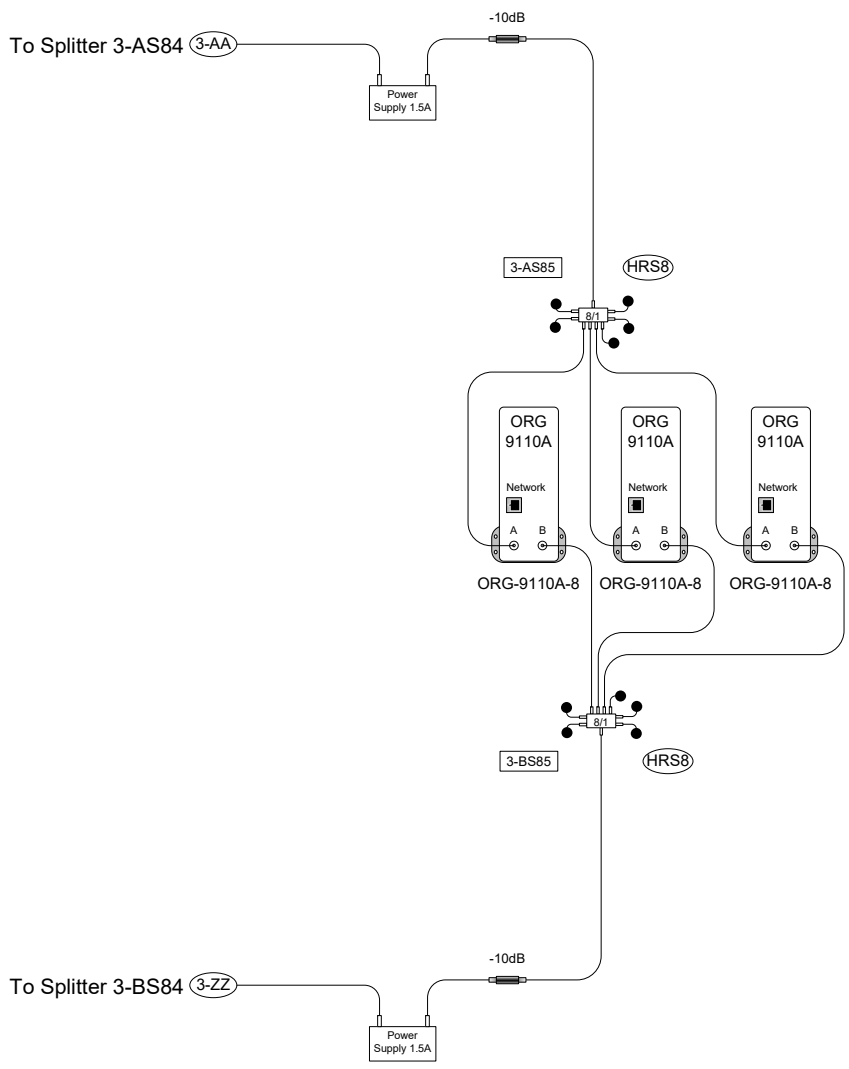

Equipment Legend:

- SL60144P-NK1 - Antenna
- TT-5900 - Terminator
- Attenuator - x dB
- 4/1 — X54 — SP-2X54 - 4/1 Splitter -8.5dB/-9.0dB
- 2/1 — X52 — SP-2X52 - 2/1 Splitter -4.2dB/-5.5dB
- 8/1 — HRS8 — NK-HR S8 - 8/1 Splitter -11.0dB/-14.4dB
- AAC — 9720 — UM-9720 – Amplifier Dual Band Variable Gain
- Addition/New Equipment
- Existing Equipment or New Install
- Power Supply 1.5A — PS-3015 Power Supply -1dB/-2dB

Wireless Medical Telemetry System Configuration

NIHON KOHDEN
15353 Barranca Pkwy
Irvine, CA 92618
(800) 325-0283

VA Medical Center
Wilmington, DE

NOTE: Any changes or modifications to this design must be approved in writing by the NKA Technical Department

Designed by: Nihon Kohden Design Planning Dept. Date:

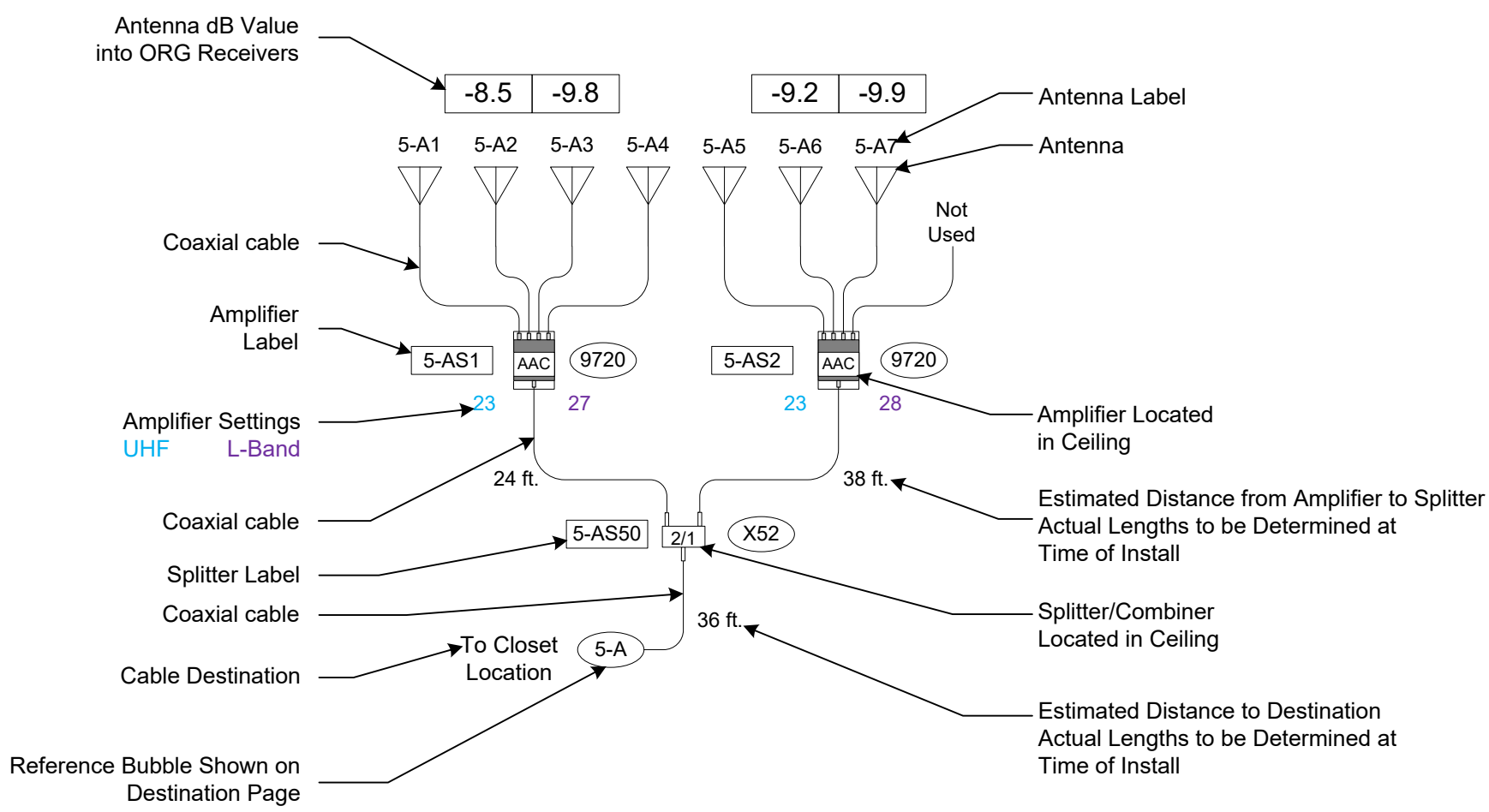

Equipment Legend:

- SL60144P-NK1 - Antenna
- TT-5900 - Terminator
- Attenuator - x dB
- 4/1 X54 — SP-2X54 - 4/1 Splitter -8.5dB/-9.0dB
- 2/1 X52 — SP-2X52 - 2/1 Splitter -4.2dB/-5.5dB
- 8/1 HRS8 — NK-HR S8 - 8/1 Splitter -11.0dB/-14.4dB
- AAC 9720 — UM-9720 – Amplifier Dual Band Variable Gain
- Addition/New Equipment
- Existing Equipment or New Install
- Power Supply 1.5A — PS-3015 Power Supply -1dB/-2dB