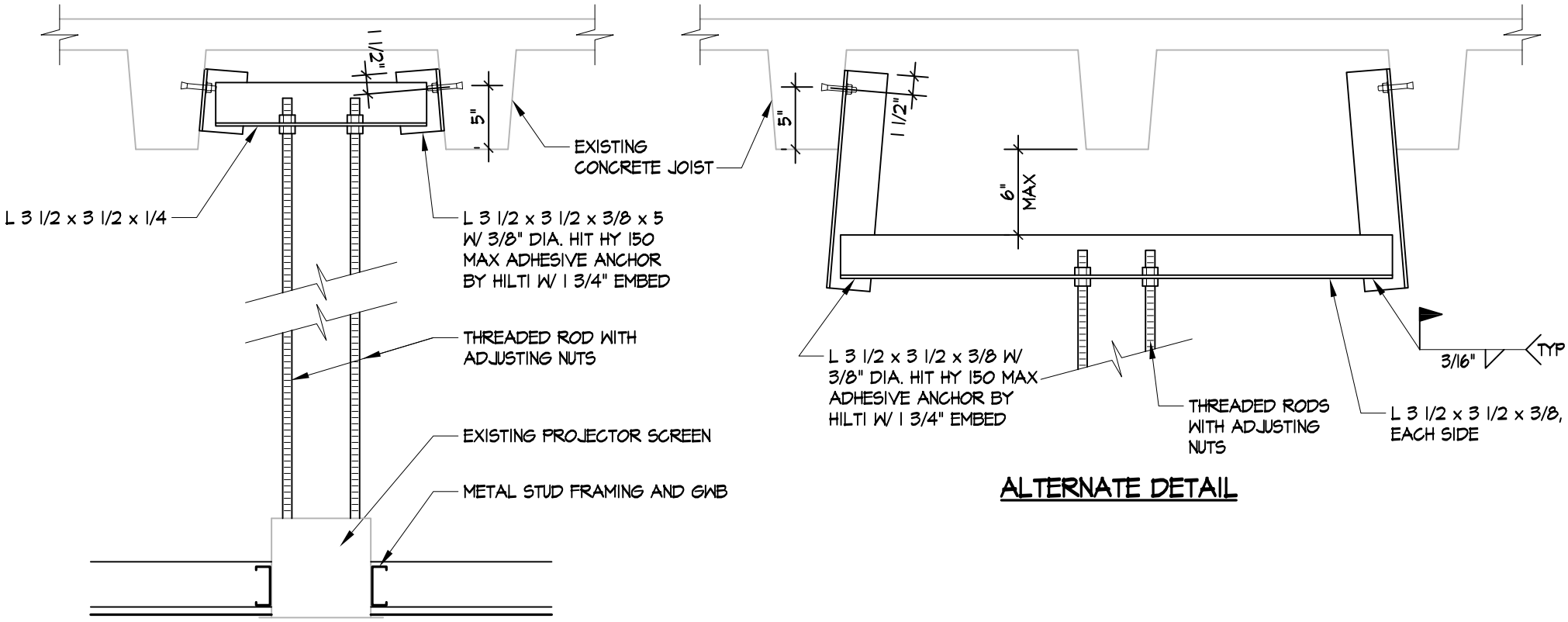

14 / A6.1 **FRAMING DETAIL**
SCALE: 1" = 1'-0"

VA Medical Center

Renovate Backfill Canteen Space
VA Project Number 636-12-103
Broadwell Avenue
Grand Island, Nebraska 68803

Addendum No. 2

Attachment E
June 13, 2012

CLH Architects

CLH Project Number 2010-08
3705 North 200th Street
Elkhorn, Nebraska 68022-2922