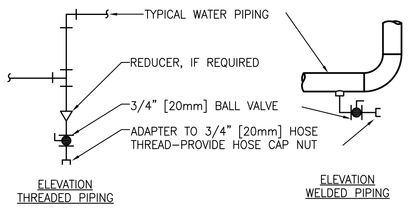

TYPICAL CHILLED AND HOT WATER PIPING DRAIN VALVE CONNECTIONS

NOTES:
1. DRAIN ALL LOW POINTS AS INDICATED ABOVE.
2. WHERE SCALE POCKETS ARE SHOWN ON PIPE RISER DIAGRAMS AND/OR PLANS LOCATE DRAIN AT BOTTOM OF SCALE POCKET.

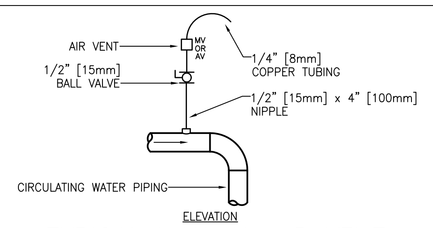

TYPICAL MANUAL AIR VENT

NOTES:
1. VENT ALL HIGH POINTS INDICATED ABOVE.
2. IF AUTOMATIC AIR VENTS ARE USED, PIPE DISCHARGE TO DRAIN.

DRAIN VALVE AND AIR VENT CONNECTIONS (HYDRONIC SYSTEMS)

1 NTS

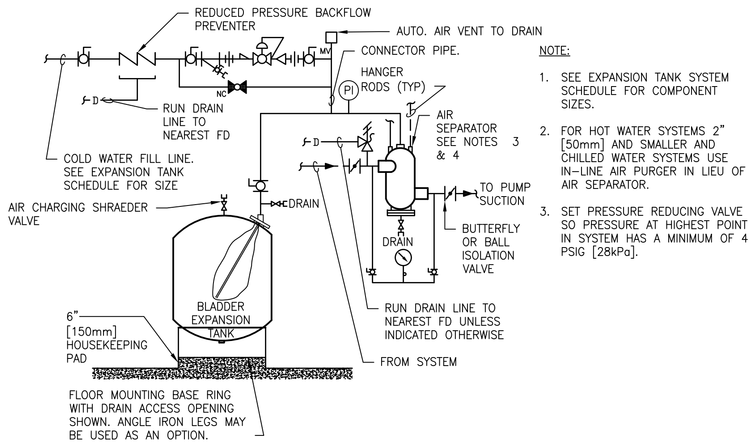

NOTE:
1. SEE EXPANSION TANK SYSTEM SCHEDULE FOR COMPONENT SIZES.
2. FOR HOT WATER SYSTEMS 2" [50mm] AND SMALLER AND CHILLED WATER SYSTEMS USE IN-LINE AIR PURGER IN LIEU OF AIR SEPARATOR.
3. SET PRESSURE REDUCING VALVE SO PRESSURE AT HIGHEST POINT IN SYSTEM HAS A MINIMUM OF 4 PSIG [28kPa].

FLOOR MOUNTED EXPANSION TANK - PIPING CONNECTIONS

2 NTS

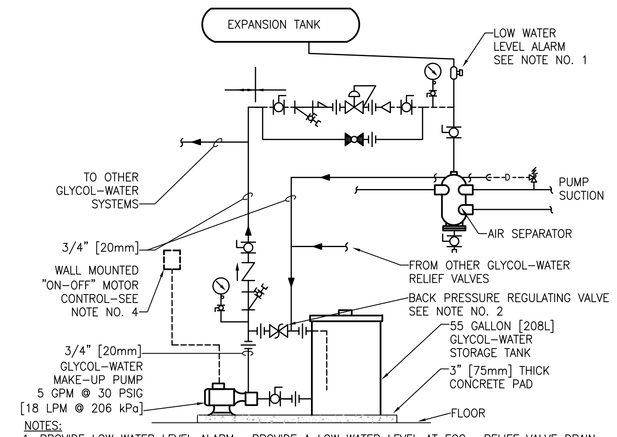

NOTES:
1. PROVIDE LOW WATER LEVEL ALARM. PROVIDE A LOW WATER LEVEL AT ECC. RELIEF VALVE DRAIN SHALL RETURN TO TANK AS SHOWN ON THIS DETAIL.
2. SET REGULATING VALVE TO MAINTAIN MAKE-UP PRESSURE AT 15 PSIG [103 kPa] ABOVE HIGHEST SYSTEM PRV SETTING.
3. MAKE-UP PIPING SYSTEM DOES NOT REQUIRE INSULATION.
4. OPERATE PUMP MANUALLY AS REQUIRED TO FILL.

INDIRECT GLYCOL MAKE-UP SYSTEM (PIPING AND CONTROLS)

3 NTS

FIRST 3 HANGERS FOR EACH PIPE AND BRANCH SHALL BE SPRING & NEOPRENE TYPE, TYPE "H" FOR 4" [100mm] DIA. PIPE AND SMALLER. TYPE "H-P" FOR 5" [125mm] DIA. PIPE AND LARGER.

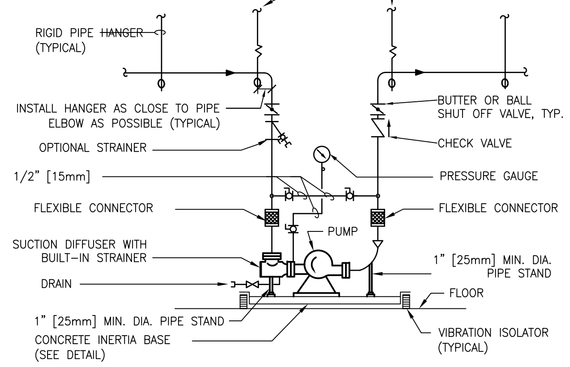

NOTE:
SEE SPECIFICATION SECTION "PUMPS" FOR Y STRAINER OPTION.
DESIGNER'S NOTE:
CHECK VALVE IS OPTIONAL FOR SINGLE PUMPS, EXCEPT FOR COOLING TOWER PUMP.

DOUBLE SUCTION FLOOR-MOUNTED PUMPS - CONNECTIONS WITH FLEXIBLE CONNECTORS

4 NTS

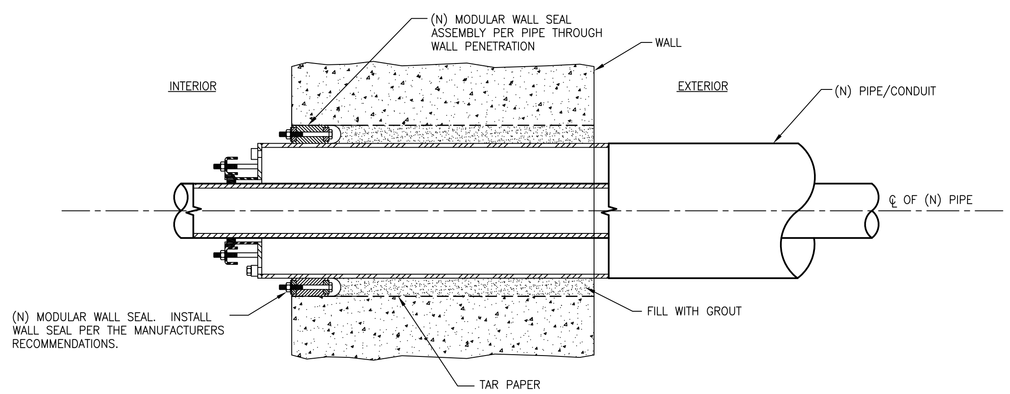

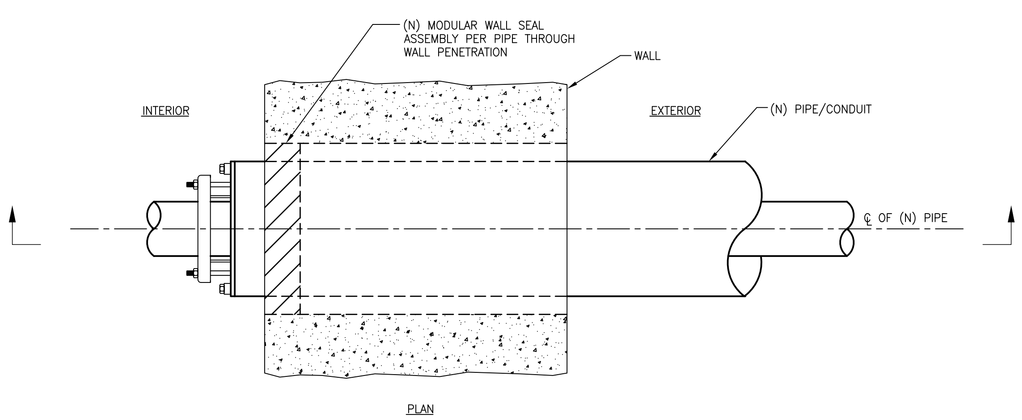

PIPE THROUGH WALL SEAL DETAIL

5 NTS

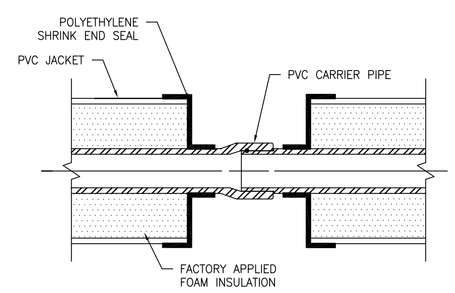

UNINSULATED PVC FIELD JOINT DETAIL W/ SHRINK END SEAL

6 NTS

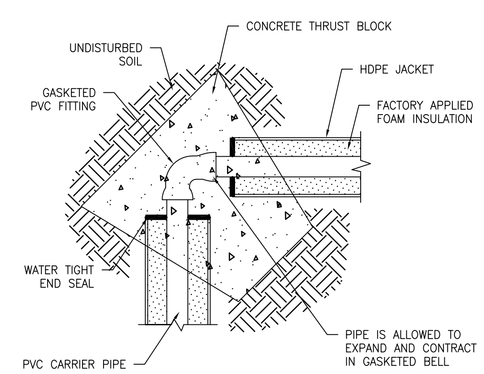

GASKETED PVC THRUST BLOCK DETAIL

7 NTS

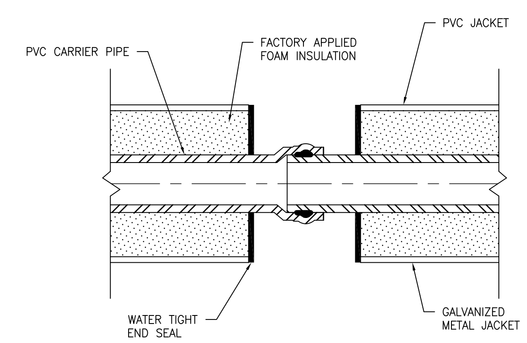

GASKETED PVC/STEEL TRANSITION DETAIL

8 NTS

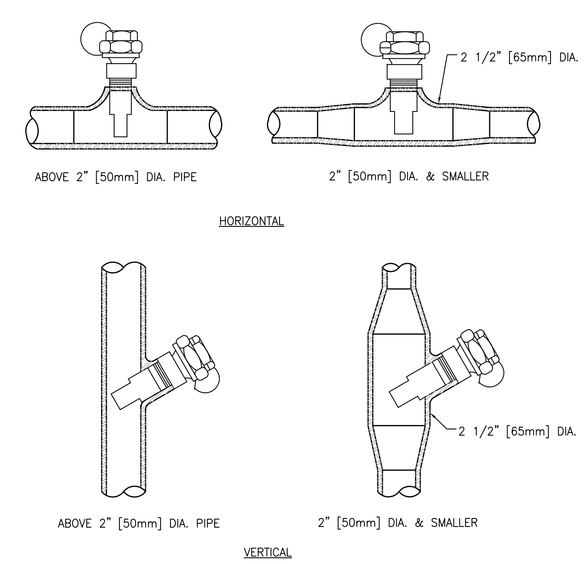

INSTALLATION OF THERMOMETER WELLS

9 NTS

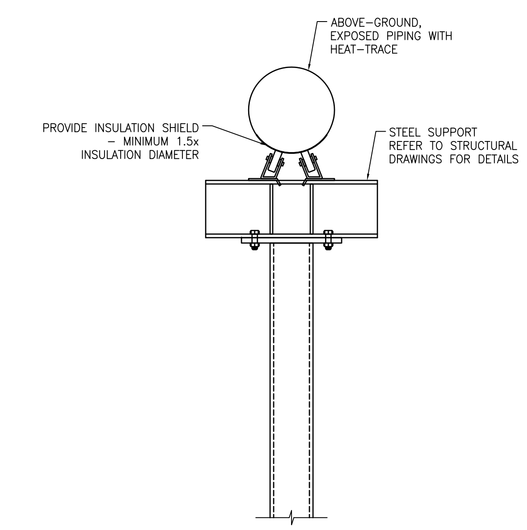

ABOVE-GROUND PIPE SUPPORT DETAIL

10 NTS

CONSTRUCTION DOCUMENTS

Revisions:	Date
ADDENDUM #1	06-11-12

CONSULTANTS:

Mechanical/Electrical/Plumbing/Structure:
ANTHONY D. PACARO JR. P.E.
MILLER-REMICK CORPORATION
PROFESSIONAL ENGINEER
PENNSYLVANIA LICENSE NO. PE062779
SIGNATURE: _____

ARCHITECT/ENGINEERS:

Miller-Remick LLC
M.E.P. & Structural Engineering
A Veteran Owned Small Business
1010 KINGS HIGHWAY SOUTH
BUILDING ONE – 1st FLOOR
CHERRY HILL, NEW JERSEY 08034
PHONE: (856)429-4000
FAX: (856)429-5002

Drawing Title: DETAILS
SCALE: NONE
Approved: Project Director

Project Title: THERMAL STORAGE FOR CHILLER PLANT
Location: VA MED. CENTER, LEBANON, PA
Date: 6/11/2012 | Checked: KD | Drawn: MM

Project Number: 595-11-131
Building Number: N/A
Drawing Number: MH-501
Dwg. 18 of 34

Office of Construction and Facilities Management
Department of Veterans Affairs

VA FORM 08-6231