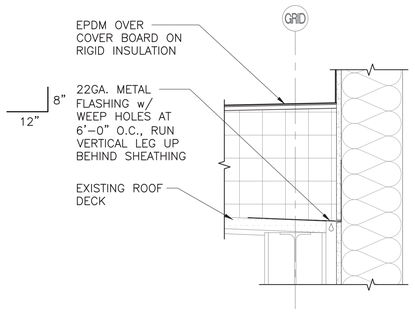

7 FLASHING AT METAL DECK
1 1/2" = 1'-0"

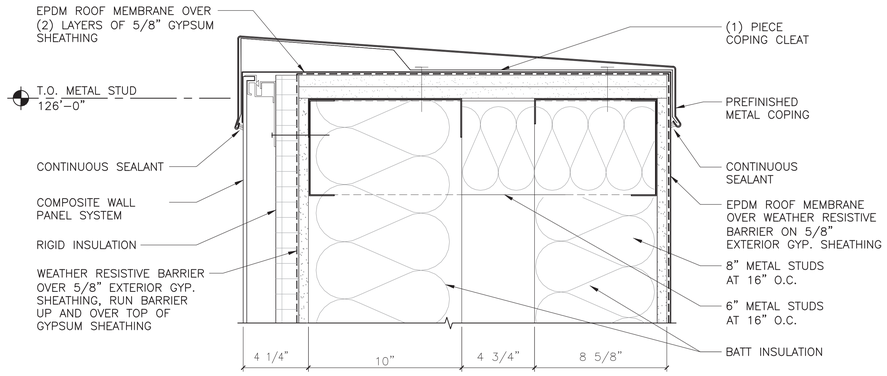

4 T.O. WALL /COPING
3" = 1'-0"

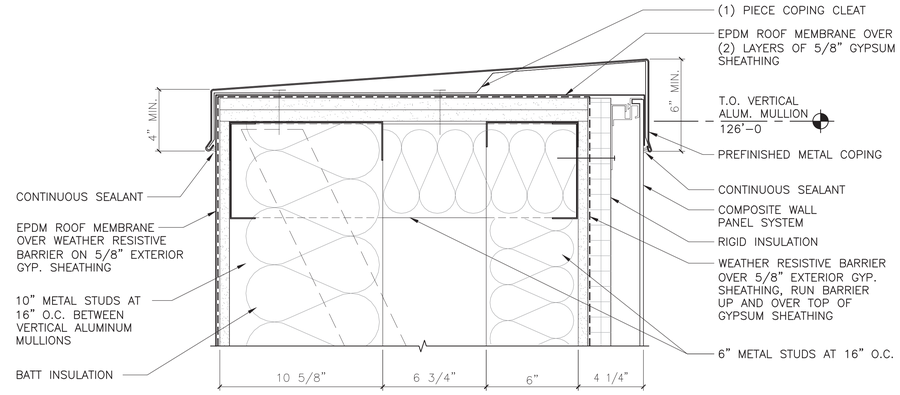

1 T.O. WALL/COPING
3" = 1'-0"

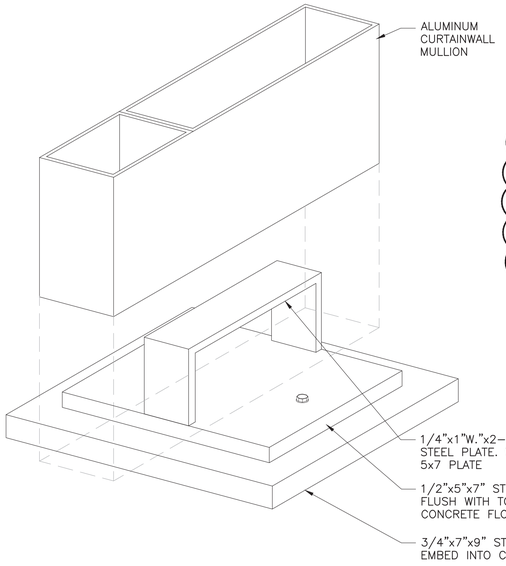

8 MULLION DETAIL AT FLOOR
6" = 1'-0"

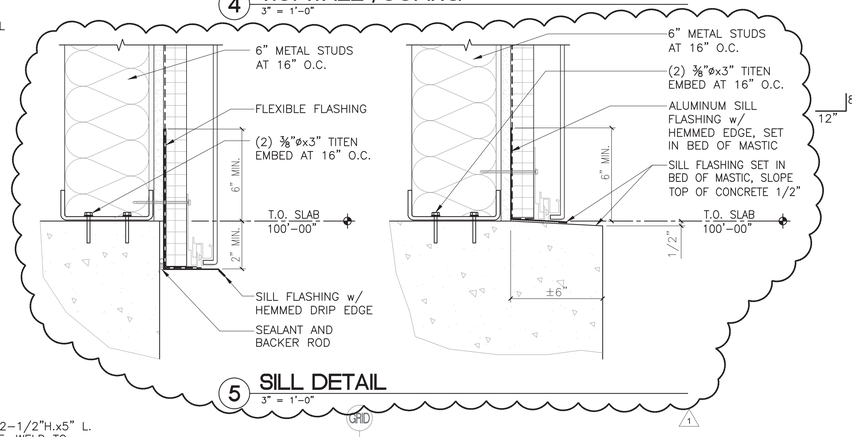

5 SILL DETAIL
3" = 1'-0"

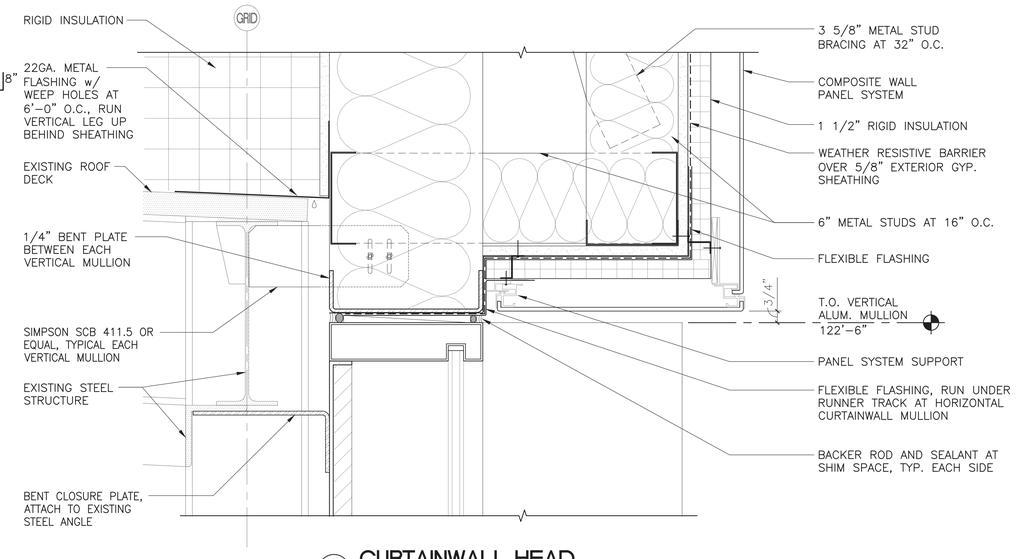

2 CURTAINWALL HEAD
3" = 1'-0"

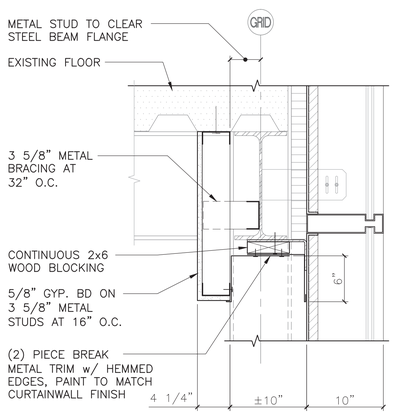

9 WINDOW BLIND POCKET/SOFFIT
1 1/2" = 1'-0"

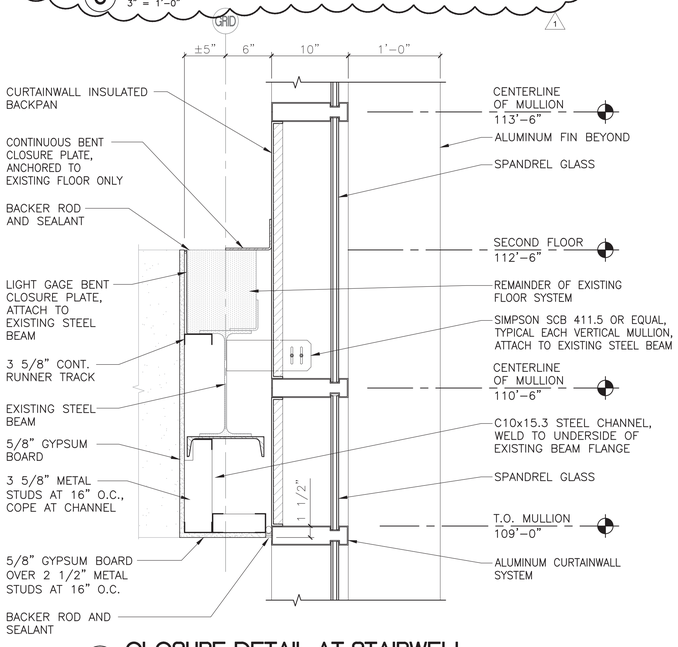

6 CLOSURE DETAIL AT STAIRWELL
1 1/2" = 1'-0"

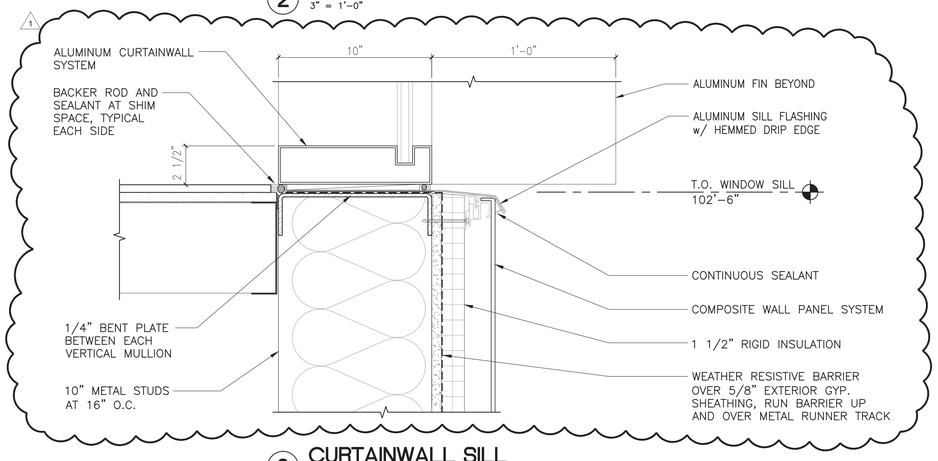

3 CURTAINWALL SILL
3" = 1'-0"

100% CONSTRUCTION DOCUMENTS

-	-
-	-
-	-
-	-
-	-
-	-
-	-
-	-
ADDENDUM 01	07/18/2017
Revisions:	Date

CONSULTANTS:

BRYAN BENNO BRAUER, P.E.
CONSULTING ENGINEER
PO BOX 2586, TRUCKEE, CA 96160 (530)582-8683
BRYAN@BBBRAUER.COM

ARSENIO ORTEGA, P.E.
CONSULTING ENGINEER
5 Third Street, Suite 716
San Francisco, CA 94103
(415) 546-0490 tel -0491 fax

Stamp and Signature

LICENSED ARCHITECT PAUL M. POWERS C-29713 REGISTRATION EXPIRES 12/31/2017 STATE OF CALIFORNIA

ARCHITECT/ENGINEERS:

KPA
THE KPA GROUP
ENGINEERS ARCHITECTS
6700 Koll Center Parkway Suite 125
Pleasanton, California 94566
Tel 925.223.8217 www.thekpagroup.com
©THE KPA GROUP 2017
KPA Project No. 630.00

Drawing Title: DETAILS

Approved Project Director: - - VAPAHCS PLANNING AND ENGINEERING

Project Title: REPLACE SUNNYVALE BLDG. 1 EXTERIOR AND ROOF

Location: 1080 INNOVATION WAY, SUNNYVALE, CA 94089

Date: 03/03/2017 | Checked: PWP | Drawn: KPA TEAM

Project Number: 640-16-121

Building Number: 1002

Drawing Number: AS802

Dwg. of

Office of Construction and Facilities Management

VA PAHCS Veterans Affairs Palo Alto Health Care System

VA FORM 08-6231

Posted 7/24/17