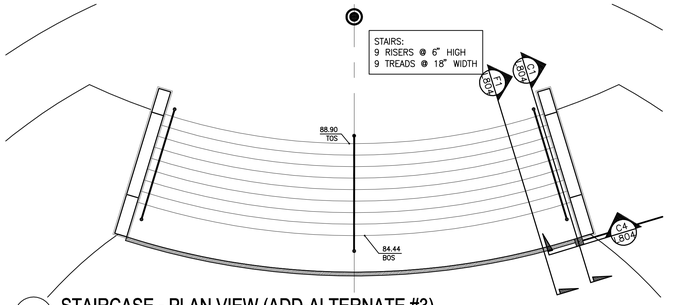

A1 STAIRCASE - PLAN VIEW (ADD-ALTERNATE #3)
1/8" = 1'-0"

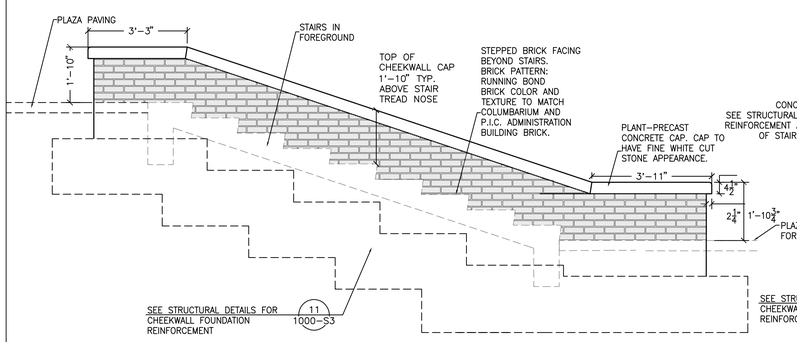

C1 CHEEKWALL - SIDE SECTION - ELEVATION (ADD-ALTERNATE #3)
1/2" = 1'-0"

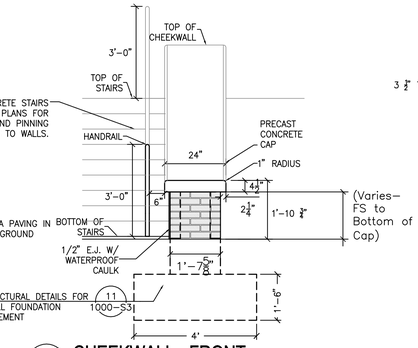

C4 CHEEKWALL - FRONT SECTION - ELEVATION
1/2" = 1'-0"

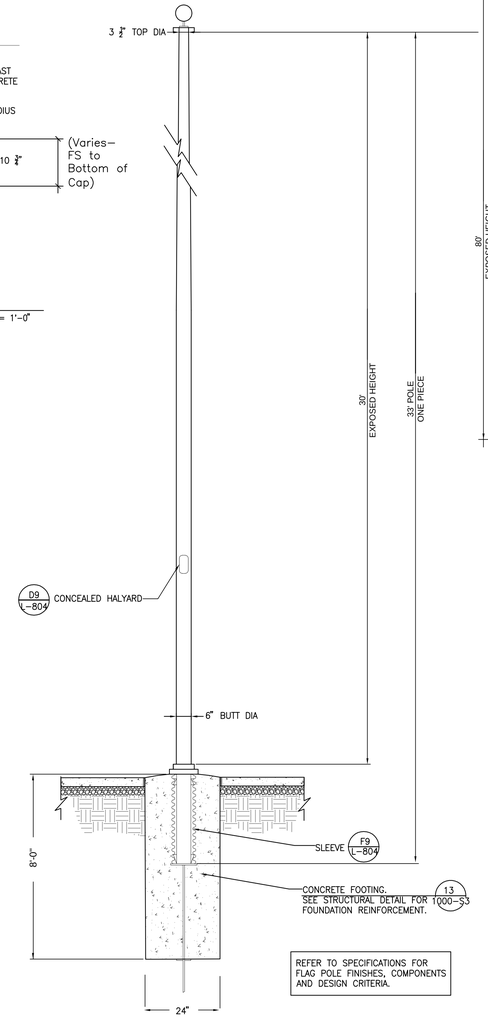

REFER TO SPECIFICATIONS FOR FLAG POLE FINISHES, COMPONENTS AND DESIGN CRITERIA.

F5 30' FLAGPOLE (RELOCATION OF EXISTING POLE)
NO SCALE

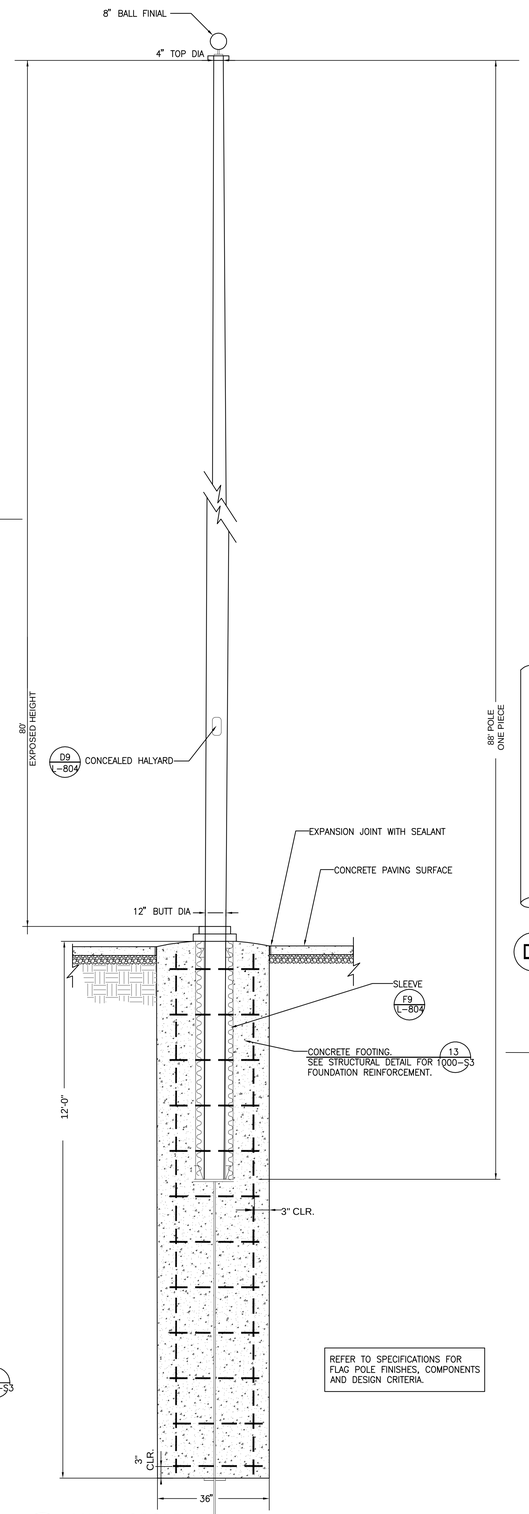

REFER TO SPECIFICATIONS FOR FLAG POLE FINISHES, COMPONENTS AND DESIGN CRITERIA.

F7 80' FLAGPOLE
NO SCALE

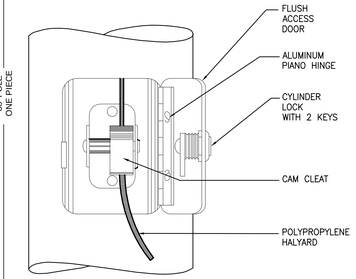

D9 CAM CLEAT INTERNAL HALYARD
NOT TO SCALE

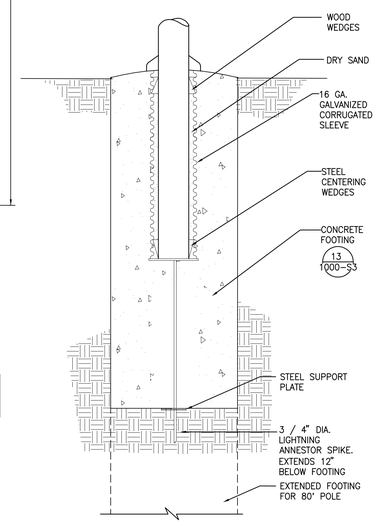

F9 30' FLAGPOLE - SLEEVE
NO SCALE

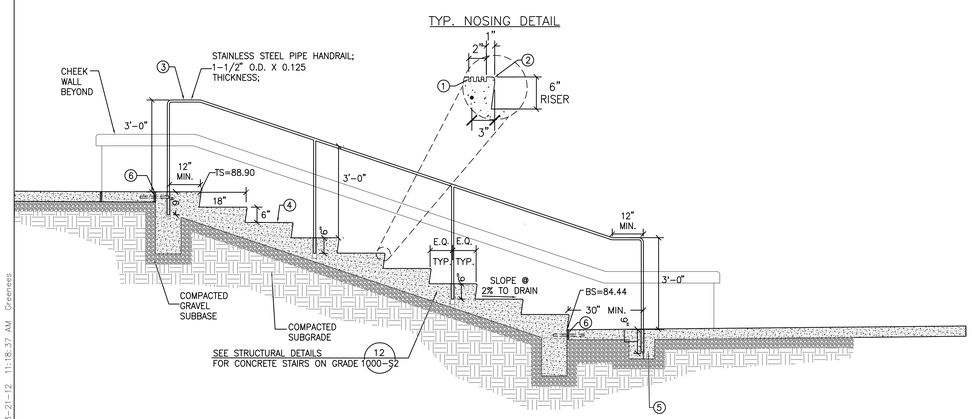

NOTE: PROVIDE 1/4" PER FT (2%) WASH ON ALL TREADS

KEYNOTES:

1. TACTILE GROOVES- 2" TOTAL WIDTH WITH 1/4" WIDE X 3/4" O.C. GROOVES OFFSET 1" FROM TREAD NOSE.
2. 1/2" RADIUS EDGE ON ALL TREAD NOSINGS
3. 1-1/2" DIAMETER ROUND SCHEDULE 40 GALVANIZED STEEL PIPE HANDRAILING. IMBED CENTER OF POSTS IN TREADS OF STAIRS OR LANDING WITH NON-SHRINK GROUT AS SHOWN ON PLANS. ALL WELDS SHALL BE GROUND SMOOTH. SUBMIT COMPLETE SHOP DRAWINGS DETAILING FABRICATION. HANDRAILING SHALL BE ADA COMPLIANT.
4. CONCRETE STAIRS WITH 18" TREADS AND 6" RISERS AS SHOWN, TYP.
5. PROVIDE THICKENED CONCRETE SLAB TO ALLOW FOR INSTALLATION OF HANDRAIL POST.
6. EXPANSION JOINT WITH 12" LONG #4 REBAR DOWELS @24" O.C. LOCATED HORIZONTALLY IN CENTER OF SLAB; SEE DETAIL F6, SHEET L-803 FOR ADDITIONAL JOINT INFORMATION.

F1 STAIRCASE - SECTION (ADD-ALTERNATE #3)
1/2" = 1'-0"

CONSTRUCTION DOCUMENTS

Revisions	Date

LICENSED LANDSCAPE ARCHITECT REBECCA McNEIL FREEMAN No. 4639 Signature 03/09/12 Renewal Date Date STATE OF CALIFORNIA

Carter:Burgess
A Wholly Owned Subsidiary of Jacobs
Consultants in Architecture, Engineering, Planning, and the Environment
Sacramento Office
180 Promenade Circle, Suite 300
Sacramento, California 95834
(916) 929-3323 Fax (916) 929-1772

Subconsultant List	
DREYFUSS & BLACKFORD	3540 FOLSOM BOULEVARD, SACRAMENTO, CA 95816 (916) 453-1234
CAPITAL ENGINEERING CONSULTANTS	11020 SUN CENTER DRIVE, RANCHO CORDOVA, CA 95670 (916) 851-3500
ECOM ENGINEERING INC.	1796 TRIBUTE ROAD, SUITE 100 SACRAMENTO, CA (916) 641-5600
BUEHLER & BUEHLER STRUCTURAL ENGINEERS, INC.	600 Q STREET, STE. 200, SACRAMENTO, CA. 95811 (916) 443-0303
W.L. BURLE ENGINEERS, PA	111 S. WALNUT STREET, GREENVILLE, MS 38702 (662) 332-2619
AQUA ENGINEERING, INC.	4803 INNOVATION DRIVE, FORT COLLINS, CO 80525 (970) 229-9668
THE SIERRA WEST GROUP, LLC	2730 GATEWAY OAKS DRIVE, STE. 110 SACRAMENTO, CA. 95833 (916) 925-4000

NATIONAL CEMETERY ADMINISTRATION

Drawing Title: SITE CONSTRUCTION DETAILS	Project Title: LOUISIANA NATIONAL CEMETERY GRAVESITE EXPANSION PHASE 1B		Date: MARCH 22, 2012
Approved: Director, Office of Construction Management	Building Number	Checked: WMR / Drawn: RJM	Project No. 870CM3023B
Approved: Director, Project Management Service	Location: LOUISIANA NATIONAL CEMETERY ZACHARY, LOUISIANA		DRAWING NO. L-804 Dwg. 49 Of 137

CONSTRUCTION DOCUMENTS

P:\Projects\WUXU0039\zDrawings\WUXU0039_UDFV__CDs__PH-1B\23_L-804 Site Const Dtls.dwg 3-21-12 11:18:37 AM Greenees