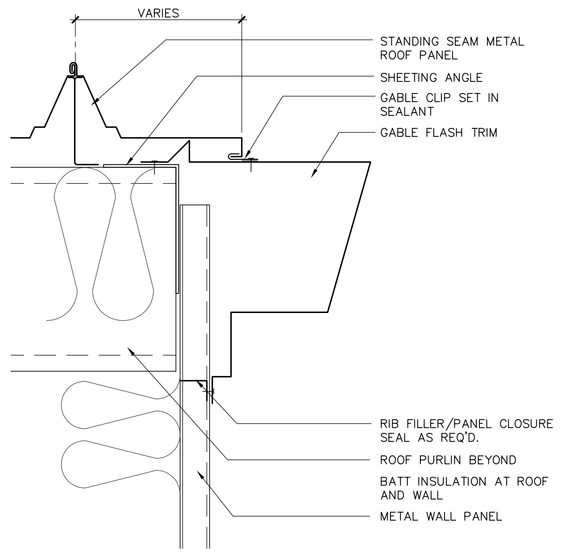

A1 TYP. GABLE END
(FILE REF: 3002-R04) 3" = 1'-0"

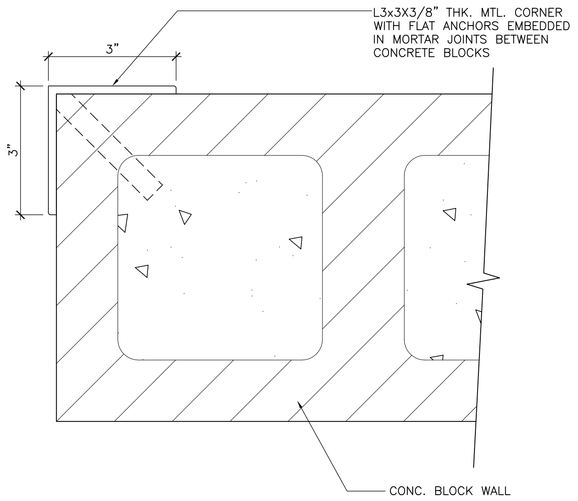

C1 METAL CORNER GUARD
6" = 1'-0"

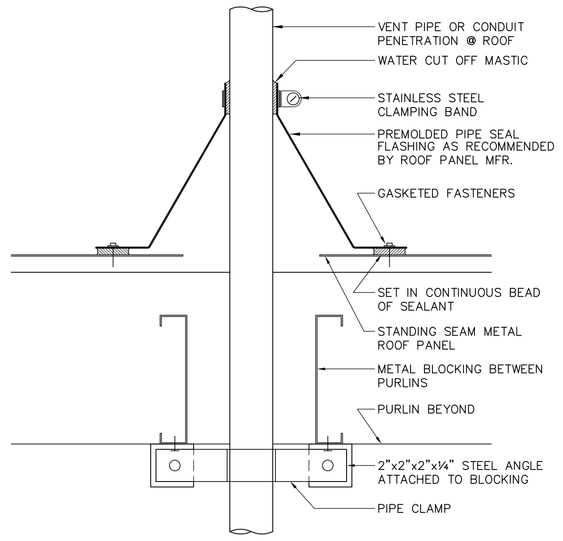

NOTES:
- SEE PLUMBING DRAWINGS FOR ADDITIONAL INFORMATION ON VENT OR PIPE.
- DO NOT FASTEN FLASHING TO ROOF SUBSTRATE, IF ANY, OR SUPPORT SUPPORT STRUCTURE.
- CUT ROOF PANEL 2" LARGER IN DIAMETER TO ALLOW FOR MOVEMENT.
- ALLOW SUFFICENT SPACE FOR DRAINING AT BOTH SIDES OF FLASHING ADJACENT TO STANDING SEAMS.-USE PIPE CURB IF REQUIRED.
- DO NOT PLACE PIPE PENETRATION AND FLASHING AT ROOF PANEL SEAM-USE PIPE CURB IF REQUIRED.
- FOR HIGH PIPES OR VENTS-PROVIDE HIGH TEMPERATURE PIPE FLASHING MATERIAL.

A4 TYP. PIPE PENETRATION AT MTL. ROOF
(FILE REF: 3002-R01) N.T.S.

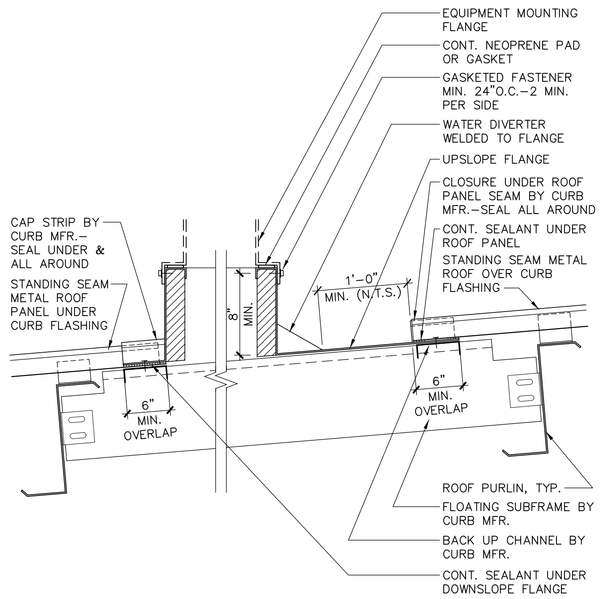

NOTES:
- PROVIDE PREFABRICATED CURB MATERIAL COMPATIBLE WITH ROOF PANEL MATERIAL.
- CURB TYPE TO BE "OVER/UNDER" TYPE-CURB FLANGE TO LAPPED UNDER ROOF PANEL AT UPSLOPE END AND OVER ROOF PANEL AT DOWNSLOPE END. SIDE FLANGE TO EXTEND TO NEXT PANEL SEAM (RIB TO RIB).
- PROVIDE MIN. 6" BETWEEN PANEL SEAMS AND CURB WALL
- CURB IS FASTENED TO AND MOVES WITH STANDING SEAM METAL ROOF PANELS-ALLOW FOR REQ'D. MOVEMENT WITH FLOATING SUBFRAME.

D4 TYP. ROOF EQUIPMENT CURB
(FILE REF: 3002-R02) 1-1/2" = 1'-0"

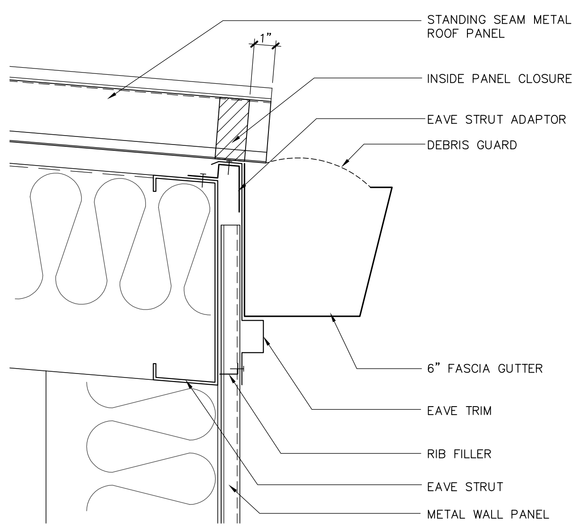

F4 TYP. EAVE GUTTER
(FILE REF: 3002-R03) 3" = 1'-0"

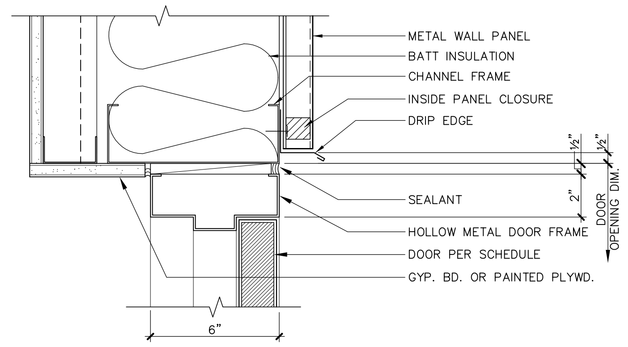

A - HEAD

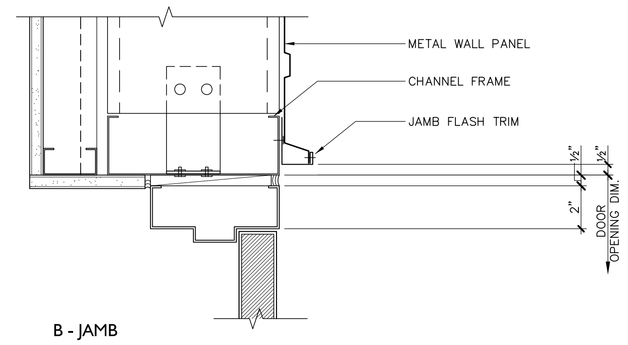

B - JAMB

A6 TYPICAL EXTERIOR DOOR HEAD & JAMB
(FILE REF: 3002-D01) 3" = 1'-0"

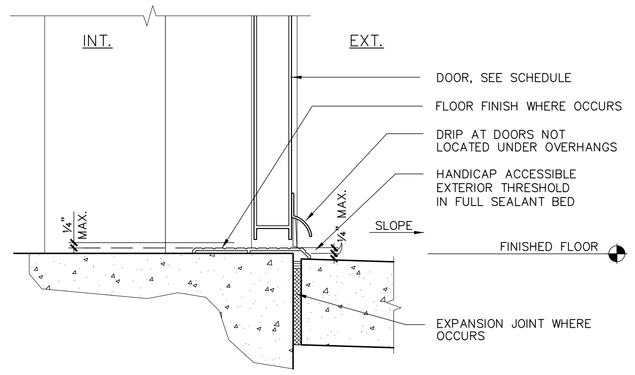

C6 TYPICAL EXTERIOR DOOR THRESHOLD
(FILE REF: 3002-D02) 3" = 1'-0"

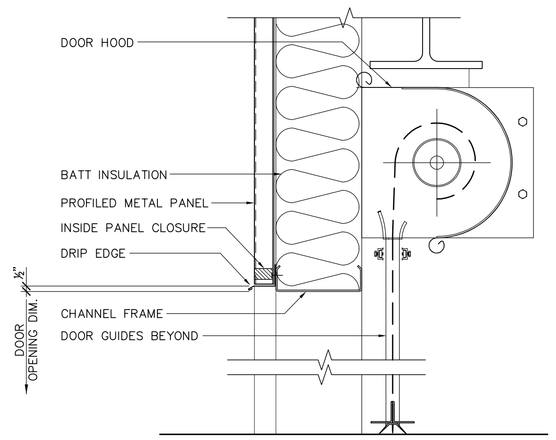

E6 TYPICAL OVERHEAD COILING DOOR - HEAD
(FILE REF: 3002-D04) 1-1/2" = 1'-0"

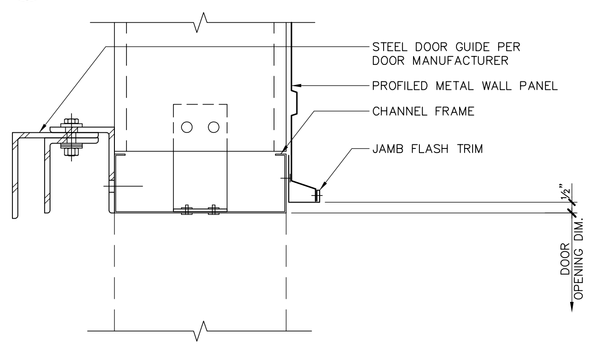

F6 TYPICAL OVERHEAD COILING DOOR - JAMB
(FILE REF: 3002-D05) 3" = 1'-0"

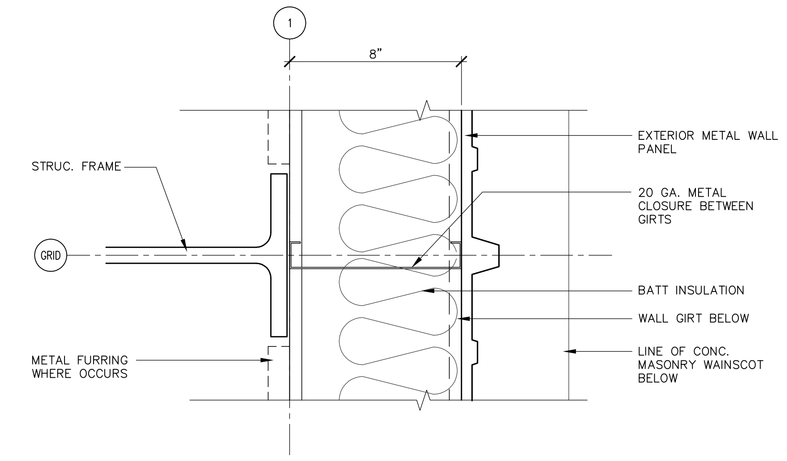

A9 INTERSECTION AT EXTERIOR WALL
(FILE REF: 3002-B4) 3" = 1'-0"

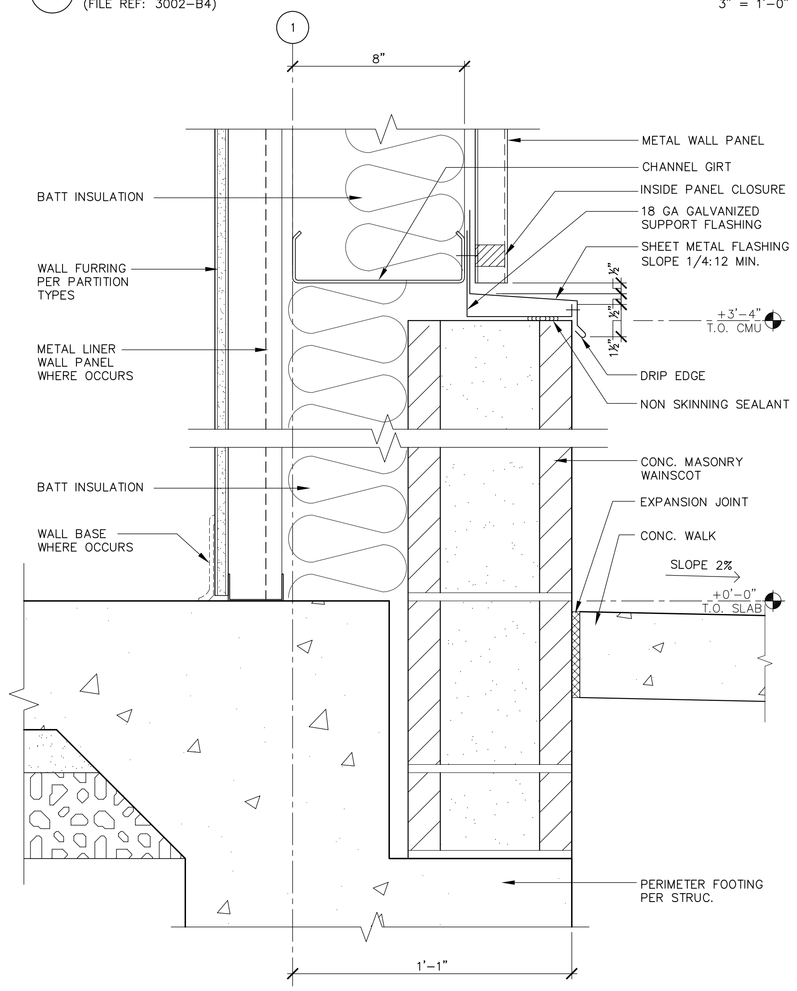

C9 TYPICAL C.M.U. BASE
(FILE REF: 3002-B2) 1 3" = 1'-0"

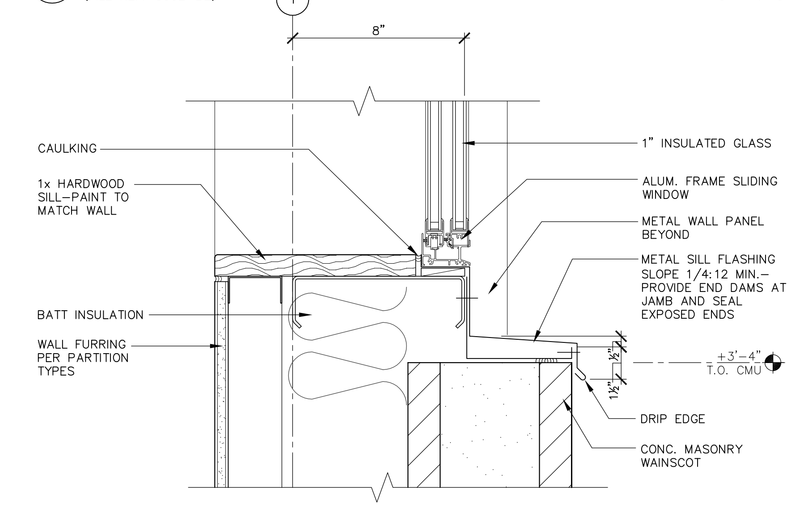

F9 WINDOW SILL
3" = 1'-0"

CONSTRUCTION DOCUMENTS

ADD ALTERNATE #1

CONSTRUCTION DOCUMENTS

Revisions	Date

LICENSED ARCHITECT C20883 JOHN CHISHOLM WEBBE REN. 10/31/11 STATE OF CALIFORNIA

Carter=Burgess
A Wholly Owned Subsidiary of Jacobs
Consultants in Architecture, Engineering, Planning, and the Environment
Sacramento Office
180 Promenade Circle, Suite 300
Sacramento, California 95834
(916) 929-3323 Fax (916) 929-1772

Subconsultant List

DREYFUSS & BLACKFORD	3540 FOLSOM BOULEVARD, SACRAMENTO, CA 95816 (916) 453-1234
CAPITAL ENGINEERING CONSULTANTS	11020 SUN CENTER DRIVE, RANCHO CORDOVA, CA 95670 (916) 851-3500
ECOM ENGINEERING INC.	1796 TRIBUTE ROAD, SUITE 100 SACRAMENTO, CA (916) 641-5600
BUEHLER & BUEHLER STRUCTURAL ENGINEERS, INC.	600 Q STREET, STE. 200, SACRAMENTO, CA. 95811 (916) 443-0303
W.L. BURLE ENGINEERS, PA	111 S. WALNUT STREET, GREENVILLE, MS 38702 (662) 332-2619
AQUA ENGINEERING, INC.	4803 INNOVATION DRIVE, FORT COLLINS, CO 80525 (970) 229-9668
THE SIERRA WEST GROUP, LLC	2730 GATEWAY OAKS DRIVE, STE. 110 SACRAMENTO, CA. 95833 (916) 925-4000

NATIONAL CEMETERY ADMINISTRATION

Drawing Title: MAINTENANCE BUILDING EXTERIOR DETAILS	Project Title: LOUISIANA NATIONAL CEMETERY GRAVESITE EXPANSION PHASE 1B		Date: MARCH 22, 2012
			Project No. 870CM3023B
Approved: Director, Office of Construction Management	Building Number 3000	Checked	Drawn GS
Approved: Director, Project Management Service	Location LOUISIANA NATIONAL CEMETERY ZACHARY, LOUISIANA		DRAWING NO. 3000-8
			Dwg. 91 Of 137

C:\B0015.00 Port Hudson VA Cemetery\Construction Documents\CAD\3000-8 Maintenance Bldg Exterior Details.dwg 3-16-12 04:28:47 PM gschulmeister