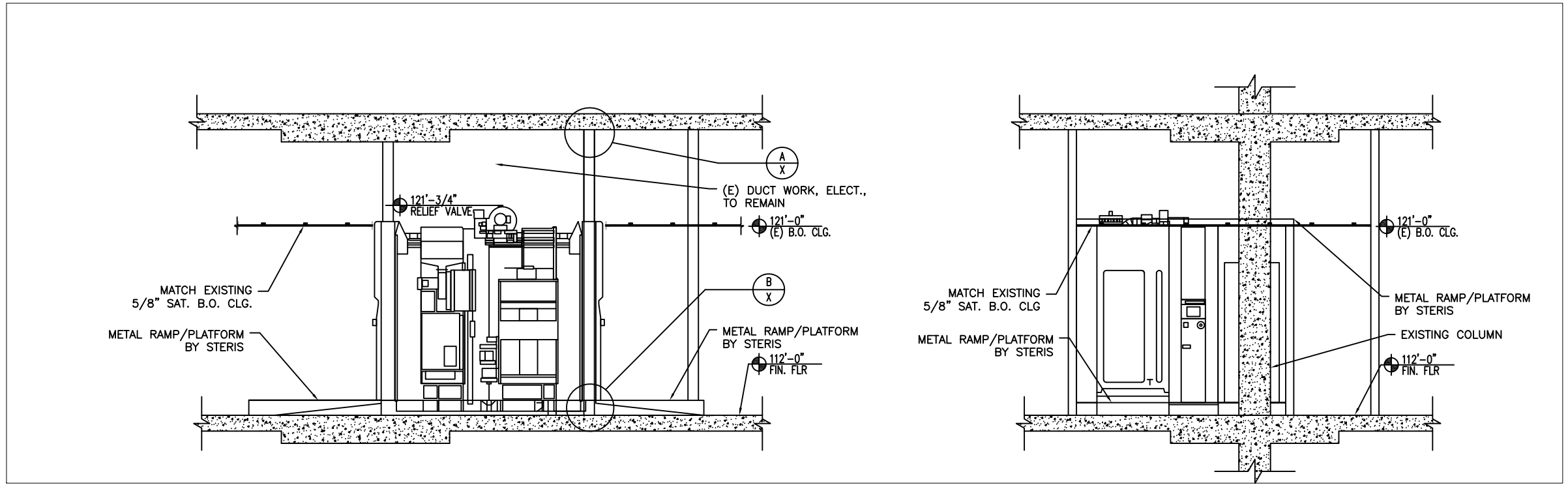

D / A2 PLAN VIEW A
1/4" = 1'- 0"

D / A2 PLAN VIEW B
1/4" = 1'- 0"

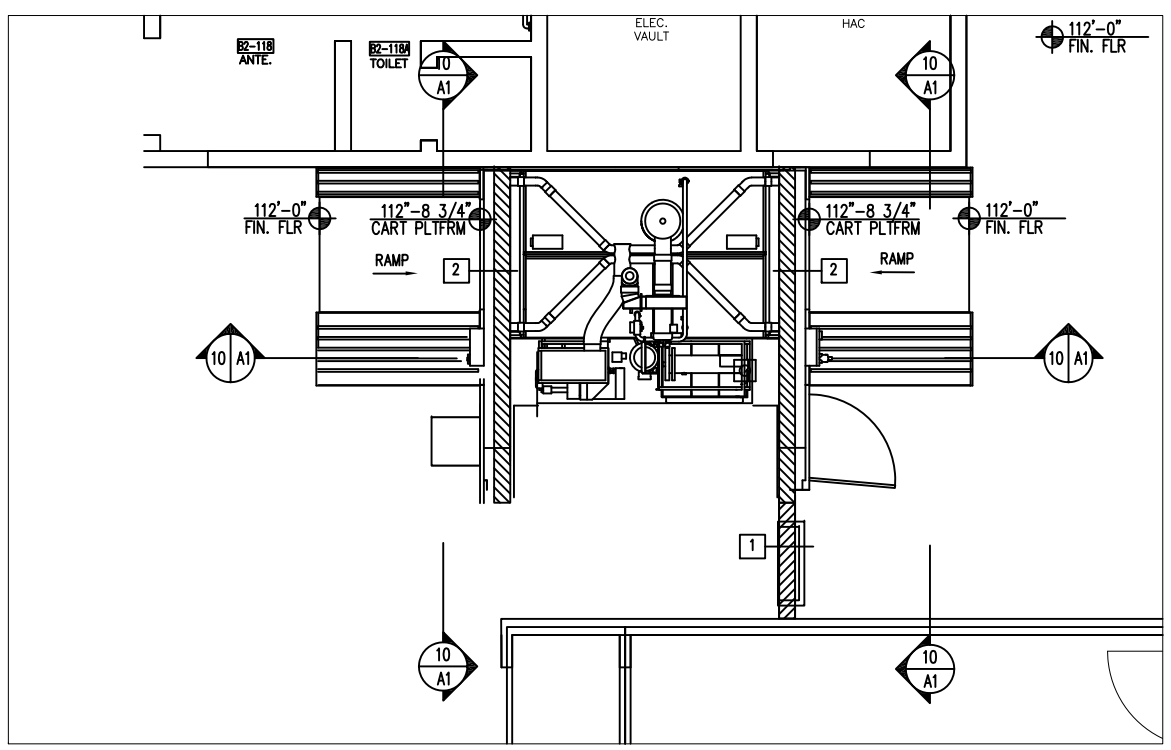

CEILING PLAN

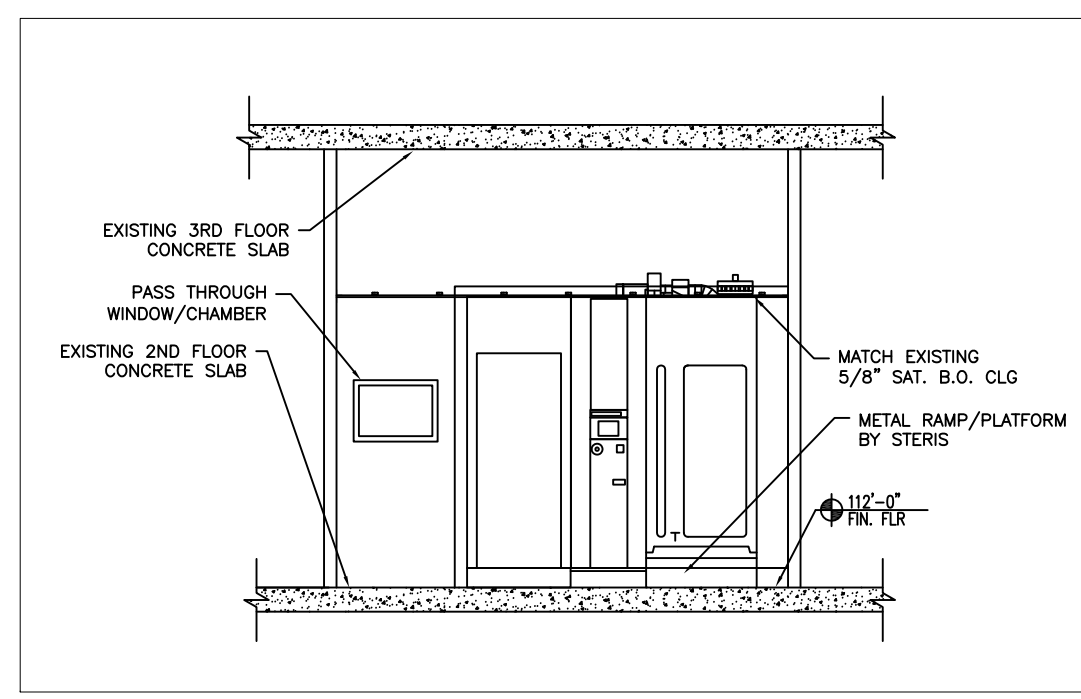

D / A2 PLAN VIEW C
1/8" = 1'- 0"

Office of Construction and Facilities Management

Project Number XXXX
Building Number XXXX
Drawing Number
Dwg. X of X

Project Title CART WASHER REPLACEMENT
Location CHEYENNE VA MEDICAL CENTER
Date 2/9/2017
Checked XX
Drawn

Drawing Title FLOOR/CEILING

Approved: Project Director
SYLVIE RUPP - CFM DIRECTOR
FACILITIES ENGINEERING
PHONE: 307-778-7550 X 7267
FAX: 307-634-0723

CONSULTANTS:

Revisions
Date

VA FORM 08-6231, OCT 1978

S:\Engineering\Projects 67.0\FY 2017 Projects\442-16-47S Replace Cart Washer\Construction\Construction Documents\Drawings\Mostrecent\ReplaceCartwasherR8.dwg