PIPING - GENERAL

Description	Symbol
DIRECTION OF FLOW	
DIRECTION OF SLOPE DOWN	
PIPE TURNING UP	
PIPE TURNING DOWN	
BRANCH CONNECTION - TOP	
BRANCH CONNECTION - BOTTOM	
BRANCH CONNECTION - SIDE	
PIPE ALIGNMENT GUIDE	
SERVICE VALVE (BALL OR BUTTERFLY)	
GLOBE VALVE	
CHECK VALVE	
CHECK VALVE WITH BALL DRIP	
BALANCING COCK	
UNION	
VALVE IN RISER	
PIPE CAP OR BLIND FLANGE	
OUTLETS (G, A, V, OX, CW, HW)	
EXPANSION JOINT	EJ
PRESSURE REDUCING VALVE	
PRESSURE RELIEF VALVE	
PRESSURE GUAGE	
THERMOMETER	
FLEXIBLE PIPE CONNECTION OR JOINT	
STRAINER	
CLEANOUT PLUG	CO OR CO
FLOOR CLEANOUT	CO
WALL CLEANOUT	CO

PIPING - PLUMBING

Description	Symbol
STORM DRAIN (ABOVE LOWEST FLR CLG)	—S—
OVERFLOW STORM DRAIN (ABOVE LOWEST FLR CLG)	—OS—
STORM DRAIN	—SD—
OVERFLOW STORM DRAIN	—OSD—
SANITARY SEWER	
VENT	------
GREASE WASTE	—GW—
COLD WATER	
HOT WATER (NUMBER DENOTES TEMPERATURE) (NO NUMBER INDICATES 120°F TEMP SYSTEM)	-----140-
HOT WATER RETURN (NUMBER DENOTES TEMP.) (NO NUMBER INDICATES 120°F TEMP SYSTEM)	-----140-
AQUASTAT	
CLEANOUT TO GRADE	CO
WATER HAMMER ARRESTOR	WHA
HOSE BIBB OR FREEZE-PROOF WALL HYDRANT	HB/WH
ROOF DRAIN	
FLOOR DRAIN WITH TRAP	
DRAIN WITH TRAP	
GAS COCK	
BACKFLOW PREVENTER	BFP

PIPING - FIRE PROTECTION

Description	Symbol
FIRE PROTECTION WATER MAIN	—F—
DRY PIPE SPRINKLER	—DSP—
AUTOMATIC SPRINKLER	—SP—
AUTOMATIC SPRINKLER DRAIN	—ASD—
SPRINKLER HEAD - PENDENT OR UPRIGHT	
SPRINKLER HEAD - RECESSED	
SPRINKLER HEAD - CONCEALED	
SPRINKLER HEAD - SIDEWALL	
SPRINKLER HEAD - RELOCATED	
DRY PIPE ALARM VALVE ASSEMBLY	
ALARM VALVE ASSEMBLY	
STANDPIPE WITH HOSE VALVE	
SPRINKLER SYSTEM VALVE W/SUPERVISORY SWITCH	SS
FLOOR CONTROL VALVE ASSEMBLY W/SUPERVISORY & FLOW SWITCHES	FCVA
FIRE PUMP TEST HEADER	
FIRE DEPARTMENT CONNECTION	
FIRE HOSE CABINET - SURFACE	FHC
FIRE HOSE CABINET - RECESSED	FHC

MISCELLANEOUS

Description	Symbol
CONNECT NEW TO EXISTING	
DIAMETER	Ø
PIPE REFERENCE	G-GAS, D-DWV, W-WATER, H-HVAC, S-STORM, RISER NO.

PIPING - SPECIAL

Description	Symbol
OXYGEN	—OX—
VACUUM	—V—
COMPRESSED AIR	—A—
NITROGEN	—N—
NITRIOUS OXIDE	—NO—
NATURAL GAS	—G—

PLUMBING ABBREVIATIONS

AAV	AUTOMATIC AIR VENT
ABV	ABOVE
AD	ACCESS DOOR
AFCV	AUTOMATIC FLOW CONTROL VALVE
AQ	AQUASTAT
ATD	AIR TRANSFER DUCT
AV	ALARM VALVE
BEL	BELOW
BHP	BRAKE HORSEPOWER
BTU	BRITISH THERMAL UNIT
BTUH	BRITISH THERMAL UNIT/HOUR
CFM	CUBIC FEET PER MINUTE
CI	CAST IRON
CONC	CONCRETE
CO	CLEANOUT
CV	CUTOFF VALVE
CW	COLD WATER
DN	DOWN
DWV	DRAINAGE, WASTE AND VENT
ESA	EQUIPMENT SERVICE AREA
EWC	ELECTRIC WATER COOLER
F	FIRE
FD	FLOOR DRAIN
FL	FLOOR
FR	FROM
FS	FLOW SWITCH
FU	DRAINAGE FIXTURE UNIT
GAL	GALLON
G	GAS
GPD	GALLONS PER DAY
GPH	GALLONS PER HOUR
GPM	GALLONS PER MINUTE
HB	HOSE BIBB
HP	HORSEPOWER
HTR	HEATER
HW	HOT WATER
HWR	HOT WATER RETURN
HZ	FREQUENCY(CYCLES/SECOND)
HV	HOSE VALVE
HVC	HOSE VALVE CABINET
KW	KILOWATT
KWH	KILOWATT HOUR
LB/HR	POUNDS PER HOUR
LO	LOCKED OPEN
L	LAVATORY
MAV	MANUAL AIR VENT
MBH	BTUH IN THOUSANDS
NC	NORMALLY CLOSED
OFD	OVERFLOW DRAIN
ORC	OVERFLOW RAIN CONDUCTOR
OS&Y	OUTSIDE SCREW AND YOKE
PIV	POST INDICATOR VALVE
PRV	PRESSURE REDUCING VALVE
PSI	POUNDS PER SQUARE INCH
PVC	POLYVINYL CHLORIDE
RC	RAIN CONDUCTOR
RD	ROOF DRAIN
RPM	REVOLUTIONS PER MINUTE
RV	RELIEF VENT
SAN	SANITARY SEWER
SD	STORM DRAIN
SH	SHOWER
SP	SPRINKLER PIPE
SST	SOIL STACK
SVT	STACK VENT
SVTR	STACK VENT THRU ROOF
SS	SUPERVISORY SWITCH
S/S	STAINLESS STEEL
SV	SERVICE VALVE
SW	SWITCH
TC	TIMECLOCK
T'STAT	THERMOSTAT
V	VOLT,VENT
VAC	VACUUM
VS	VENT STACK
VE	VACUUM EXHAUST
VTR	VENT THRU ROOF
W	WASTE, WATTS
WM	WASHING MACHINE
WC	WATER CLOSET
WG	WATER GAGE (FEET OR INCHES)
WH	WALL HYDRANT
WHA	WATER HAMMER ARRESTOR
WS	WATER STOP
WST	WASTE STACK
WTR	WATER
Z	ZONE

THESE SYMBOLS AND ABBREVIATIONS ARE PLUMBING DEPARTMENT STANDARDS AND MAY NOT NECESSARILY BE APPLCABLE TO OR APPEAR ON THESE DRAWINGS, HOWEVER WHEREVER THESE SYMBOLS DO OCCUR ON THE DRAWINGS, THE ITEM SHALL BE PROVIDED AND INSTALLED. SEE ARCHITECTURAL DRAWINGS FOR ADDITIONAL ABBREVIATIONS.

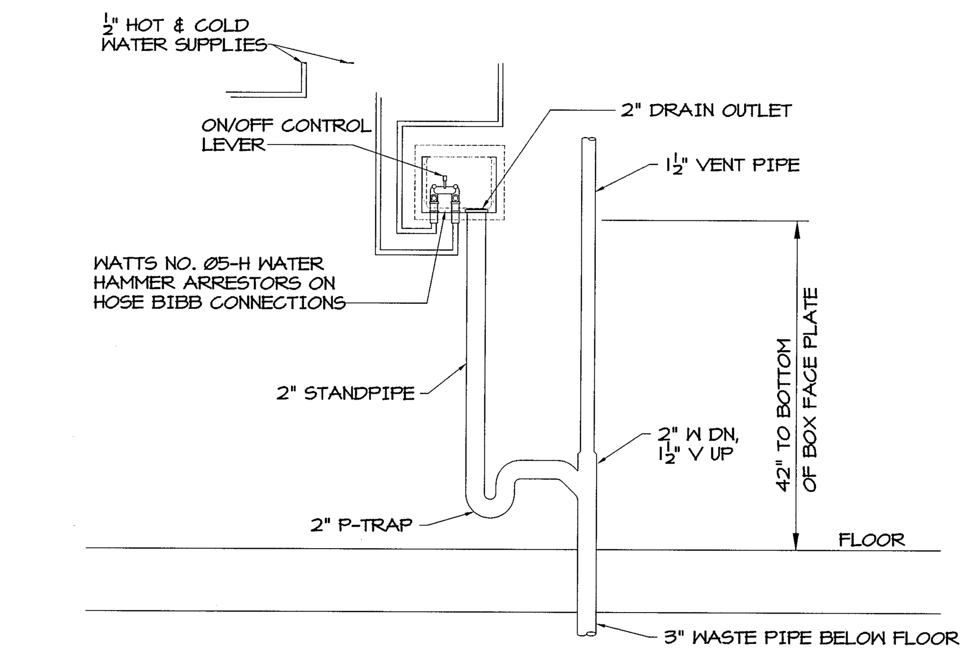

DETAIL - WASHING MACHINE CONNECTION BOX - P-70

NO SCALE

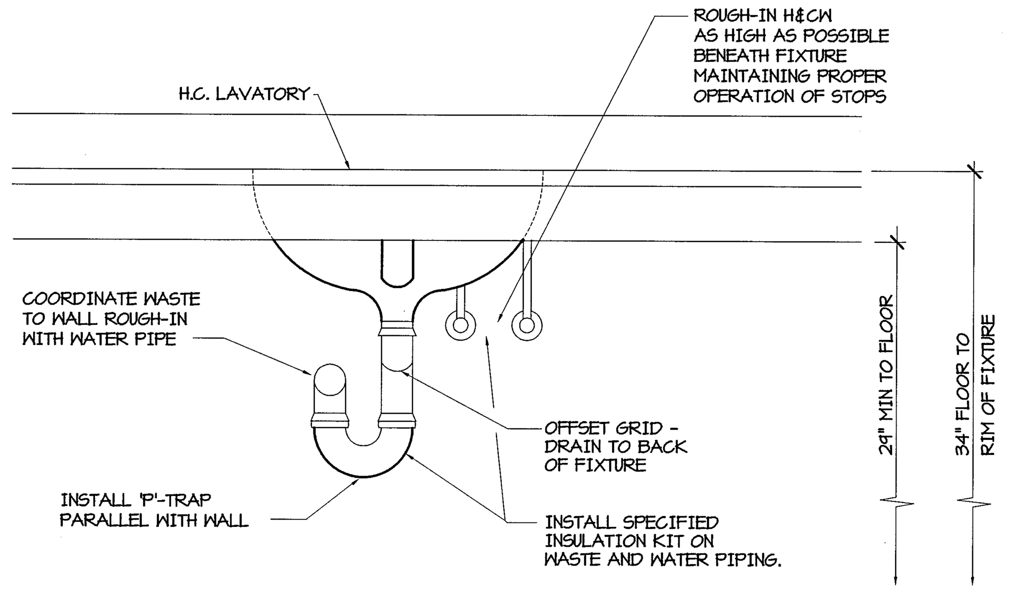

DETAIL - H.C. LAV FIXTURE P-401

NO SCALE

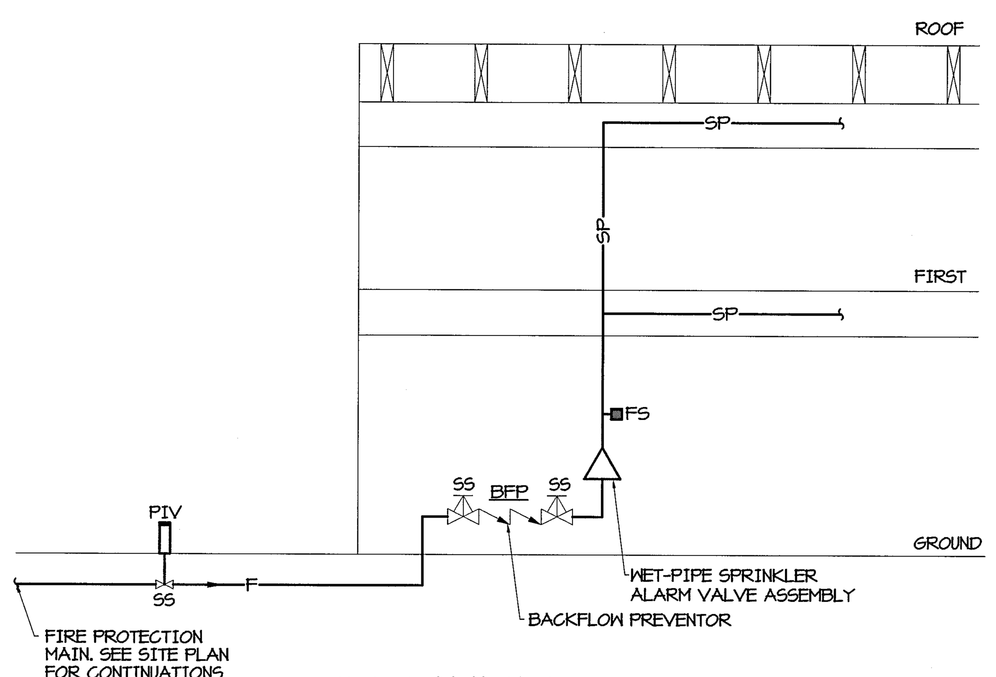

SPRINKLER RISER

NO SCALE

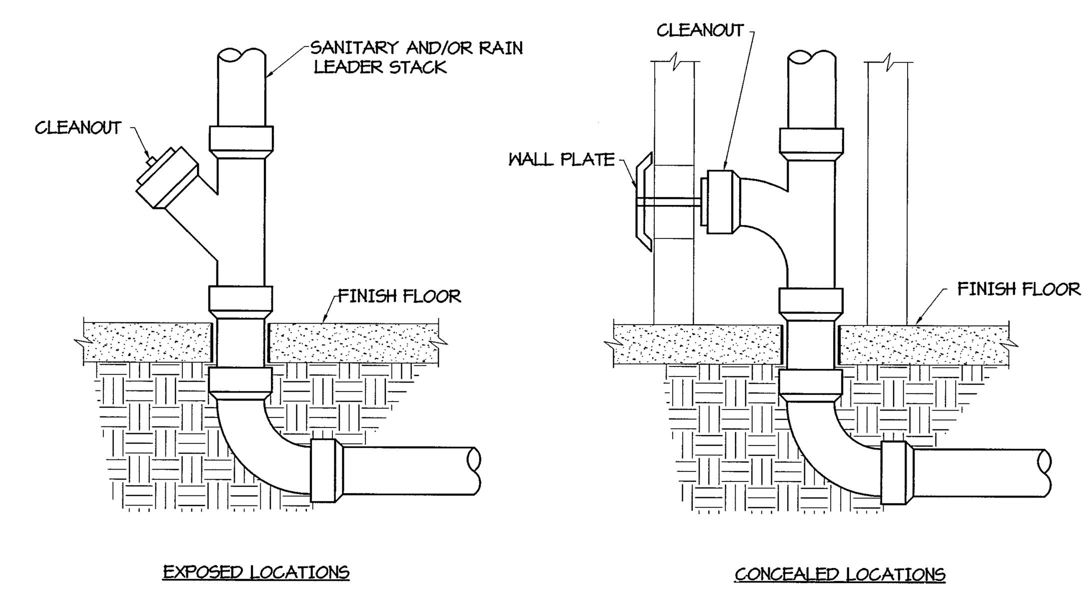

DETAIL-CLEANOUT @ STACK

NO SCALE

FIXTURE SCHEDULE

MARK	FIXTURE/TYPE/LOCATION	MOUNTING HEIGHT	CW	HW	TRAP	SOIL OR WASTE	VENT	REMARKS
P-101	WATER CLOSET-TANK-PUB TOIL-HC	17"	1/2"	-	-	4"	2"	FLOOR MOUNT
P-201	NOT USED							
P-301	NOT USED							
P-401	LAVATORY-PUBLIC/RESIDENT-HC	CTR TOP	1/2"	1/2"	1-1/4"	2"	1-1/2"	BOWL INTEGRAL WITH COUNTERTOP
P-501	SINK-MOP	FLOOR	1/2"	1/2"	3"	3"	1-1/2"	
P-502	SINK-KITCHEN-DOUBLE BOWL	CTR TOP	1/2"	1/2"	1-1/2"	2"	1-1/2"	SINGLE LEVER FAUCET
P-503	SINK-ACTIVITY	CTR TOP	1/2"	1/2"	1-1/2"	2"	1-1/2"	UNDERMOUNT
P-504	SINK-OUTDOOR	CTR TOP	1/2"	1/2"	1-1/2"	2"	1-1/2"	
P-601	ELECTRIC WATER COOLER(HC HI-LO)	36" / 40"	1/2"		1-1/4"	2"	1-1/2"	
P-701	SHOWER-HC	44"	1/2"	1/2"	2"	2"	1-1/2"	
P-801	WASHING MACHINE CONN BOX	42"	1/2"	1/2"	2"	2"	1-1/2"	
P-802	ICE MAKER CONN BOX	8"	1/2"	-	-	-	-	

FIXTURE SCHEDULE NOTES:

1. SIZES GIVEN ARE FOR ONE FIXTURE ONLY. EXCEPTIONS, IF ANY, ARE SHOWN ON DRAWINGS.
2. MOUNTING HEIGHT DIMENSIONS ARE FROM FLOOR TO FLOOD LEVEL RIM OF FIXTURE UNLESS NOTED OTHERWISE.
3. MOUNTING HEIGHT GIVEN FOR WATER COOLER IS FROM FLOOR TO CENTERLINE OF OUTLET AT BUBBLER.
4. WATER CLOSET FLUSH TANK LEVER OR FLUSH VALVE HANDLE SHALL BE ON WIDE SIDE OF WATER CLOSET.

EQUIPMENT SCHEDULE:

WATER HEATER : SEMI-INSTANTANEOUS STEAM AERCO CO. SWIA HEATER. 15 PSI LINE PRESSURE; 8 GPM FLOW RATE

HOT WATER RECIRCULATING PUMP NO. 1 (HWRP #1): 5 GPM, 17 FT HD; 1/6 HP, 120 VOLT; BELL & GOSSETT SERIES PR.

WATER TEMPERING MANIFOLD (WTM): 120°F MAX DISCHARGE TEMPERATURE AT 4.2 GPM MAX FLOW, 5 PSI PRESSURE DROP LEONARD VALVE MODEL XL-690.

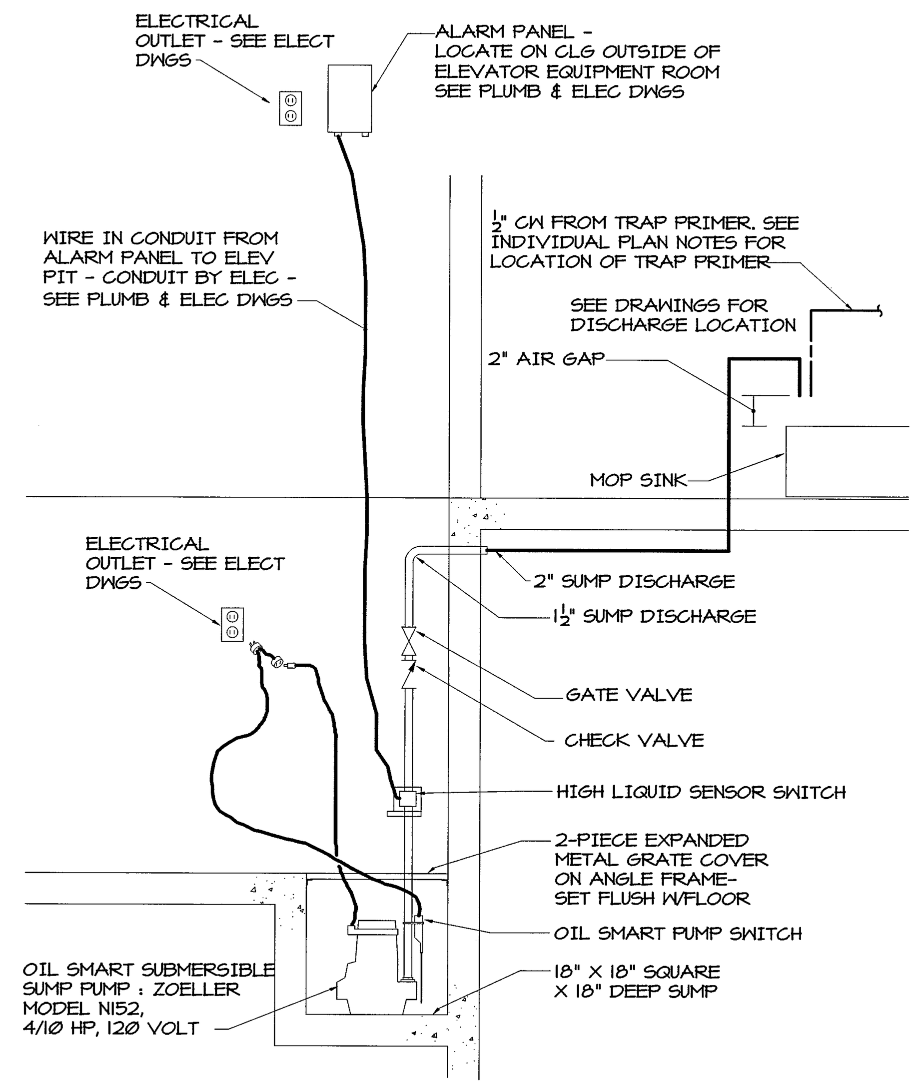

OIL SMART ELEVATOR SUMP PUMP DETAIL

NO SCALE

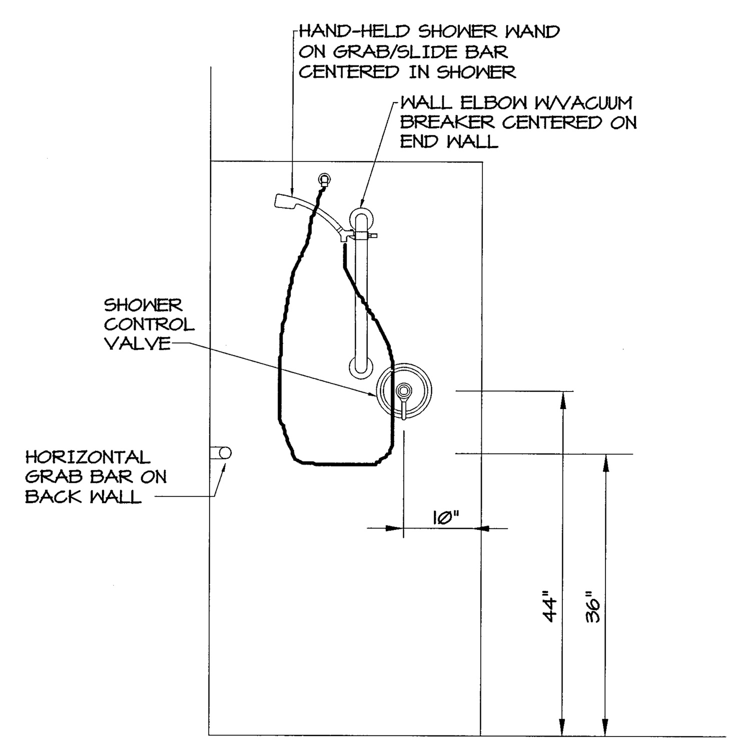

P-701 SHOWER WET WALL

NO SCALE

Revisions:	Date

CONSULTANTS:

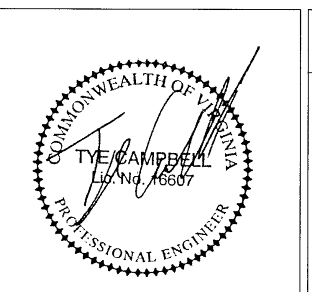

ARCHITECT/ENGINEERS:

SFCS Architecture Engineering Planning Interiors
SFCS Inc. ▪ 305 South Jefferson Street
Roanoke, Virginia 24011.2003
540.344.6664 ▪ Fax 540.343.6925
www.sfcs.com

ANDERSON & ASSOCIATES, INC.
Professional Design Services
www.andassoc.com
100 Ardmore St. Blacksburg, VA 24060 540-552-5592

Drawing Title: PLUMBING LEGEND, FIXTURE SCHEDULE, NOTES + STD DETAILS

Approved: Project Director

Project Title: Adult Day Care Building, VA Medical Center, Comm No. 10110.00

Location: Beckley, West Virginia

Date	Checked	Drawn
08/05/2011	-	CMO

Project Number: VA246-P-0568

Building Number: -

Drawing Number: P0.0

Dwg. 56 of 77

Office of Construction and Facilities Management

Department of Veterans Affairs

VA FORM 08-6231