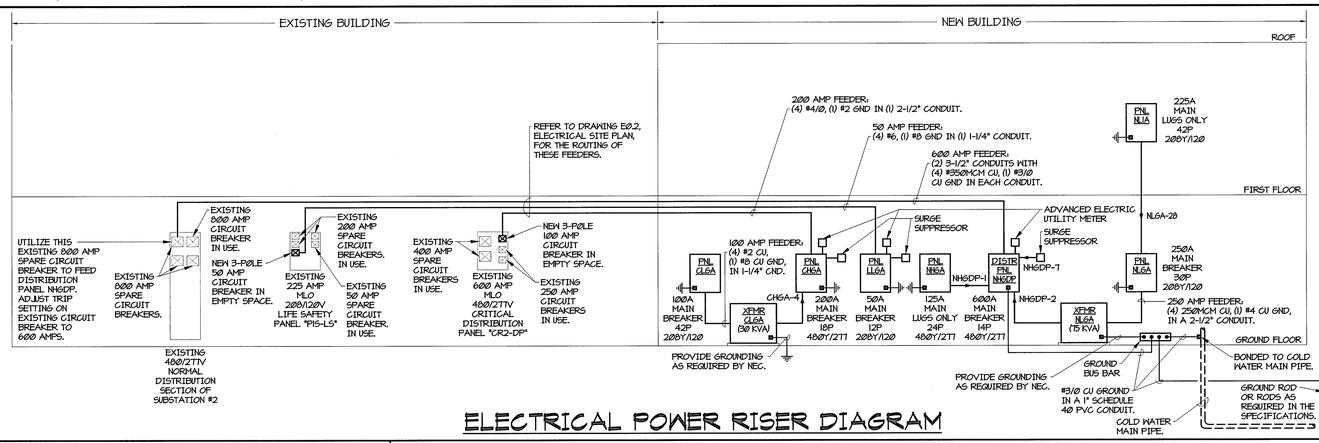

ELECTRICAL POWER RISER DIAGRAM

ELECTRICAL EQUIPMENT:

N H G DP

SYSTEM
N - NORMAL POWER
L - LIFE SAFETY (EMERGENCY)
C - CRITICAL (EMERGENCY)

VOLTAGE
H - 480Y/277
L - 208Y/120

FLOOR
G - GROUND FLOOR
1 - 1ST FLOOR

SUFFIX
DP - DISTRIBUTION PANEL
A, B, C . . . (DEPENDING ON NO. OF PANELS)

PLAN NOTES (THIS DWG)

1. PROVIDE ALL REQUIRED FIRE ALARM CONNECTIONS TO THE SPRINKLER SYSTEM. COORDINATE QUANTITY AND LOCATION OF ALL REQUIRED CONNECTIONS WITH SPRINKLER CONTRACTOR.
2. PROVIDE ALL REQUIRED FIRE ALARM CONNECTIONS TO DOOR(S) WITH DELAYED EGRESS DEVICES.
3. PROVIDE ALL REQUIRED FIRE ALARM CONNECTIONS TO DIVISION 17 LOW VOLTAGE EQUIPMENT AS REQUIRED.
4. PROVIDE ALL REQUIRED FIRE ALARM CONNECTIONS TO DIVISION 15 MECHANICAL EQUIPMENT AS REQUIRED. THIS INCLUDES BUT IS NOT LIMITED TO duct SMOKE DETECTORS, SMOKE DAMPERS, SMOKE/FIRE DAMPERS, ETC.
5. COORDINATE WITH WANDER MANAGEMENT SYSTEM PROVIDER/MANUFACTURER TO PROVIDE QUANTITY, SIZE, AND LOCATION OF OUTLET BOXES NECESSARY TO INSTALL WANDER MANAGEMENT DOOR DEVICES.
6. COORDINATE WITH WANDER MANAGEMENT SYSTEM PROVIDER/MANUFACTURER TO PROVIDE QUANTITY AND SIZE OF WIRES NECESSARY TO INSTALL WANDER MANAGEMENT DOOR DEVICES. PROVIDE AND INSTALL ALL WIRING IN 3/4" CONDUIT.
7. COORDINATE WITH WANDER MANAGEMENT SYSTEM PROVIDER/MANUFACTURER TO PROVIDE QUANTITY AND SIZE OF WIRES NECESSARY TO INSTALL WANDER MANAGEMENT DOOR DEVICES. PROVIDE AND INSTALL ALL WIRING IN 1" CONDUIT.

PLAN NOTES CONT'D (THIS DWG)

8. COORDINATE WITH WANDER MANAGEMENT SYSTEM PROVIDER/MANUFACTURER TO PROVIDE QUANTITY, SIZE, AND LOCATION OF OUTLET BOXES NECESSARY TO INSTALL WANDER MANAGEMENT DOOR DEVICES IN AN EXTERIOR BOLLARD. EXTERIOR WANDER MANAGEMENT DEVICES SHALL BE WEATHERPROOF.
9. TIE NEW FIRE ALARM SYSTEM INTO EXISTING FIRE ALARM SYSTEM IN EXISTING BUILDING VIA A FIBER OPTIC CONNECTION. PROVIDE NEW HARDWARE REQUIRED TO EXPAND EXISTING FIRE ALARM SYSTEM IN EXISTING BUILDING TO INCLUDE THE NEW FIRE ALARM SYSTEM. NEW FIRE ALARM SYSTEM SHALL BE EQUAL TO OR COMPATIBLE TO EXISTING FIRE ALARM SYSTEM (SIMPLEX GRINNELL).
10. COORDINATE WITH NURSE CALL SYSTEM PROVIDER/MANUFACTURER TO PROVIDE QUANTITY, SIZE, AND LOCATION OF OUTLET BOXES NECESSARY TO INSTALL NURSE CALL DEVICES.
11. COORDINATE WITH NURSE CALL SYSTEM PROVIDER/MANUFACTURER TO PROVIDE QUANTITY AND SIZE OF WIRES NECESSARY TO INSTALL NURSE CALL DEVICES. PROVIDE AND INSTALL ALL WIRING IN 3/4" CONDUIT.

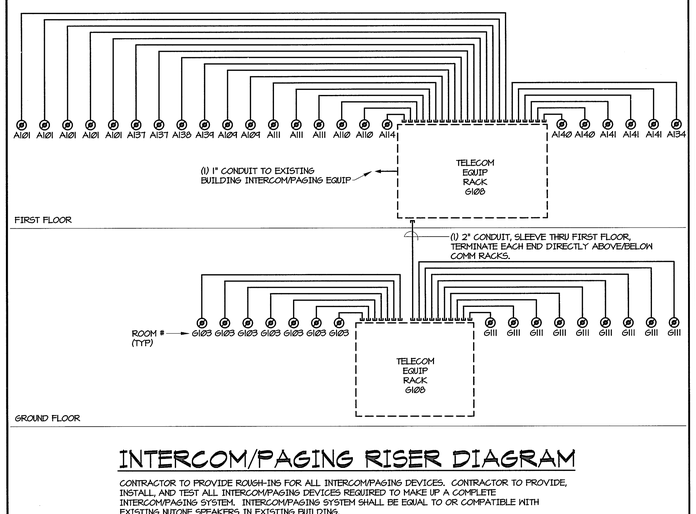

INTERCOM/PAGING RISER DIAGRAM

CONTRACTOR TO PROVIDE ROUGH-INS FOR ALL INTERCOM/PAGING DEVICES. CONTRACTOR TO PROVIDE, INSTALL, AND TEST ALL INTERCOM/PAGING DEVICES REQUIRED TO MAKE UP A COMPLETE INTERCOM/PAGING SYSTEM. INTERCOM/PAGING SYSTEM SHALL BE EQUAL TO OR COMPATIBLE WITH EXISTING NUTONE SPEAKERS IN EXISTING BUILDING.

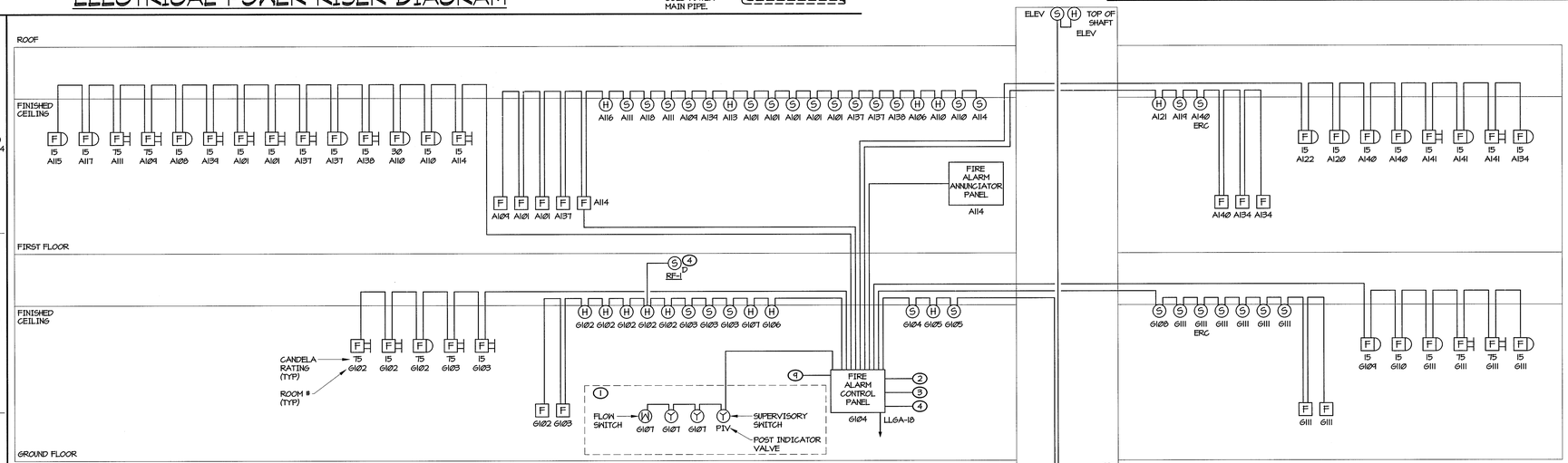

FIRE ALARM RISER DIAGRAM

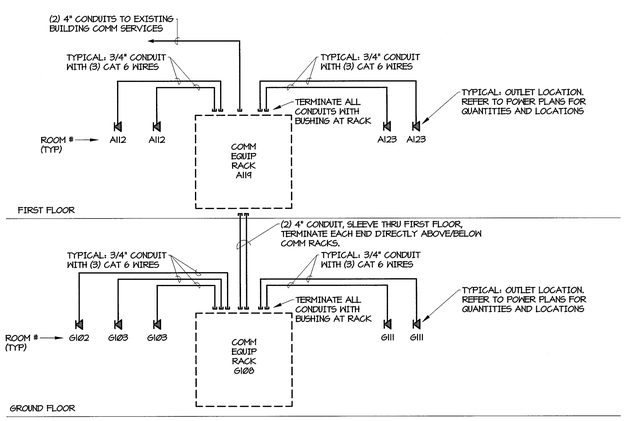

TELECOMMUNICATIONS RISER DIAGRAM

CONTRACTOR TO PROVIDE ROUGH-INS FOR ALL TELECOMMUNICATION (TELEPHONE, TELEVISION, AND DATA) DEVICES. CONTRACTOR TO PROVIDE, INSTALL, AND TEST ALL TELECOMMUNICATION DEVICES REQUIRED TO MAKE UP A COMPLETE TELECOMMUNICATION SYSTEM.

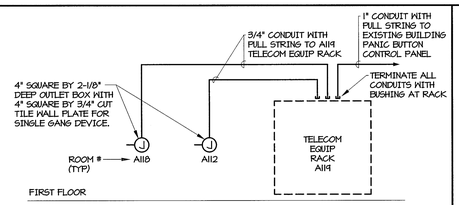

PANIC BUTTON RISER DIAGRAM

CONTRACTOR TO PROVIDE ROUGH-INS FOR PANIC BUTTON SYSTEM. OWNER TO PROVIDE AND INSTALL PANIC DEVICES, WALL PLATES, WIRING, HEAD-IN EQUIPMENT IN TELECOM ROOM, CONNECTIONS AND PROGRAMING TO EXISTING SYSTEM IN EXISTING BUILDING, AND TESTING THE INSTALLED SYSTEM.

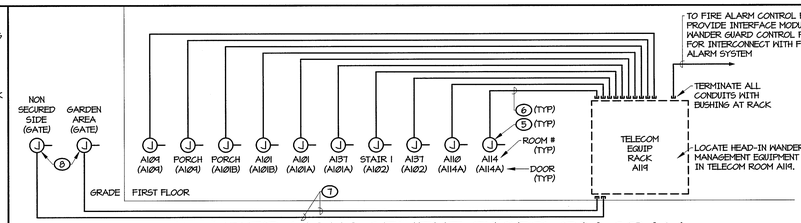

WANDER MANAGEMENT RISER DIAGRAM

CONTRACTOR TO PROVIDE ROUGH-INS FOR ALL WANDER MANAGEMENT DEVICES. CONTRACTOR TO PROVIDE, INSTALL, AND TEST ALL WANDER MANAGEMENT DEVICES REQUIRED TO MAKE UP A COMPLETE WANDER MANAGEMENT SYSTEM. WANDER MANAGEMENT SYSTEM SHALL BE EQUAL TO OR COMPATIBLE WITH RF TECHNOLOGIES CODE ALERT.

DOOR CONTROLS:

DOORS AI14A, AI09, AI02, AI01A - DOOR NORMALLY HAS FREE EGRESS AT ALL TIMES DURING NORMAL OPERATING HOURS. THE WANDER MANAGEMENT SYSTEM WILL AUTOMATICALLY LOCK THE DOORS WHEN A PATIENT WEARING A TRANSMITTER APPROACHES THE DOOR. WHEN THE DOOR IS LOCKED DUE TO WANDER MANAGEMENT A VALID COMBINATION ON THE KEYPAD WILL UNLOCK THE DOOR. WHEN THE DOOR IS OPEN DURING FREE EGRESS AND A PATIENT WEARING A TRANSMITTER APPROACHES THE DOOR THE DOOR WILL GO INTO ALARM, WHERE THE ALARM WILL ANNUNCIATE VIA A SELF-CONTAINED ALARM AND TRANSMIT BACK TO A CENTRAL MONITORING STATION. ACTIVATION OF THE BUILDING FIRE ALARM SYSTEM UNLOCKS THE GATE AND MAINTAINS GATE IN UNLOCKED STATE UNTIL THE FIRE ALARM SYSTEM IS RESET.
THE KEYPADS SHALL BE CAPABLE OF BEING REPLACED WITH FUTURE CARD READERS. DOOR WILL BE PROVIDED WITH MAG LOCKS, TO BE PROVIDED BY THE DOOR HARDWARE PROVIDER.

DOOR AI01B - THIS DOOR IS NORMALLY LOCKED. A VALID COMBINATION ON THE KEYPAD ON EITHER SIDE OF THE DOOR WILL UNLOCK THE DOOR. ACTIVATION OF THE BUILDING FIRE ALARM SYSTEM UNLOCKS THE DOOR AND MAINTAINS DOOR IN UNLOCKED STATE UNTIL THE FIRE ALARM SYSTEM IS RESET. THE KEYPADS SHALL BE CAPABLE OF BEING REPLACED WITH FUTURE CARD READERS. A PACKAGED SELF-CONTAINED LOCAL ALARM WILL BE PROVIDED AT THIS DOOR AND TRANSMIT BACK TO CENTRAL MONITORING STATION. DOOR WILL BE PROVIDED WITH MAG LOCKS, TO BE PROVIDED BY THE DOOR HARDWARE PROVIDER.

GATE - COURTYARD GATE IS NORMALLY LOCKED. A VALID COMBINATION ON THE KEYPAD ON EITHER SIDE OF THE GATE WILL UNLOCK THE GATE. ACTIVATION OF THE BUILDING FIRE ALARM SYSTEM UNLOCKS THE GATE AND MAINTAINS GATE IN UNLOCKED STATE UNTIL THE FIRE ALARM SYSTEM IS RESET. THE KEYPADS SHALL BE CAPABLE OF BEING REPLACED WITH FUTURE CARD READERS. GATE WILL BE PROVIDED WITH MAG LOCKS, TO BE PROVIDED BY THE DOOR HARDWARE PROVIDER. KEYPADS TO BE INSTALLED IN BOLLARD AT 42" ABOVE FINISHED GRADE.

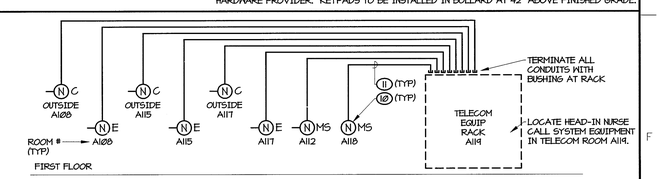

NURSE CALL RISER DIAGRAM

CONTRACTOR TO PROVIDE ROUGH-INS FOR ALL NURSE CALL DEVICES. CONTRACTOR TO PROVIDE, INSTALL, AND TEST ALL NURSE CALL DEVICES REQUIRED TO MAKE UP A COMPLETE NURSE CALL SYSTEM. NURSE CALL SYSTEM SHALL BE EQUAL TO OR COMPATIBLE WITH ROLLINS RESPONDER 4 NURSE CALL SYSTEM.

Revisions:	Date

CONSULTANTS:

COMMONWEALTH OF VIRGINIA
TYE A. CAMPBELL
LICENSE NO. 18607
PROFESSIONAL ENGINEER

ARCHITECT/ENGINEERS:

SFCS
Architecture Engineering Planning Interiors
SFCS Inc. ▪ 305 South Jefferson Street
Roanoke, Virginia 24011.2003
540.344.6664 ▪ Fax 540.343.6925
www.sfcs.com

ANDERSON & ASSOCIATES, INC.
Professional Design Services
www.andassoc.com
100 Ardmore St.
Blacksburg, VA 24060
540-552-5592

Drawing Title: ELECTRICAL RISER DIAGRAMS	Project Title: Adult Day Care Building, VA Medical Center, Comm No. 10110.00		Project Number: VA246-P-0568
Approved: Project Director	Location: Beckley, West Virginia		Building Number: -
	Date: 08/05/2011	Checked: WAM / Drawn: WAM	Drawing Number: E4.1 Dwg. 76 of 77

Office of Construction and Facilities Management
Department of Veterans Affairs

VA FORM 08-6231