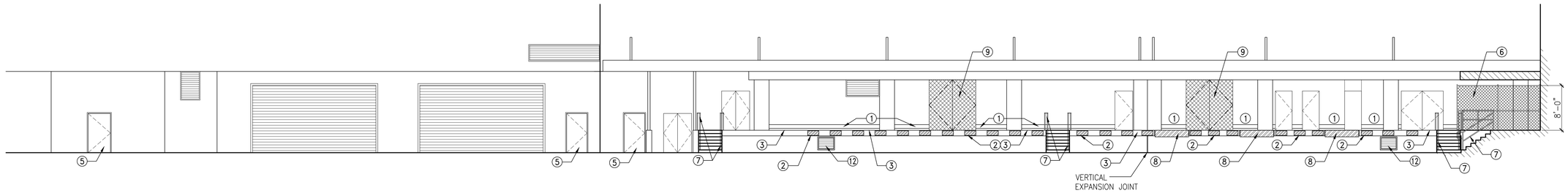

1 / AE104 ELEVATION - LOADING DOCK - NEW WORK

SCALE: 1/8" = 1'-0"

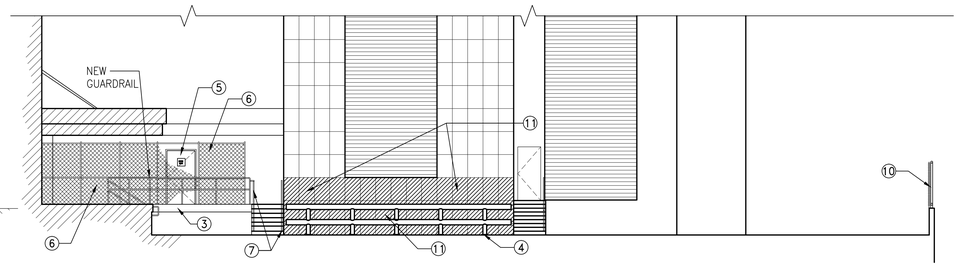

2 / AE104 ELEVATION - LOADING DOCK - NEW WORK

SCALE: 1/8" = 1'-0"

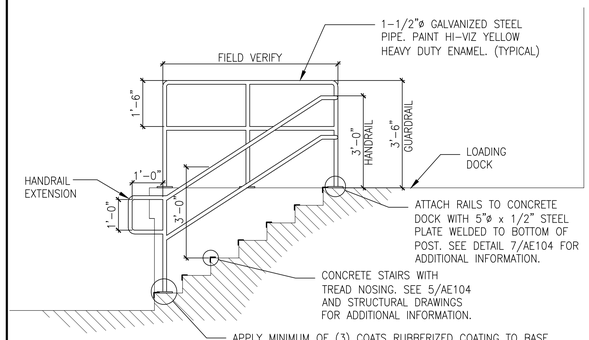

3 / AE104 HANDRAIL DETAIL - NEW WORK

SCALE: NOT TO SCALE

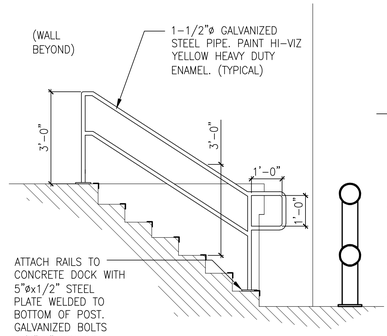

3A / AE104 HANDRAIL DETAIL - NEW WORK

SCALE: NOT TO SCALE

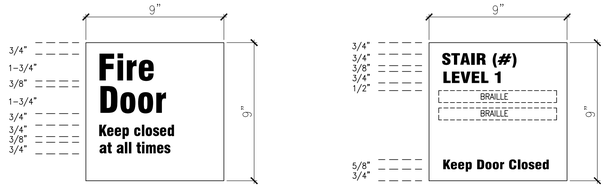

1. ACRYLIC PLAQUE.
2. FIELD COLOR: RED
3. TEXT COLOR: WHITE SILK-SCREENED
4. TEXT STYLE: "HELVETICA BOLD"
5. TOP OF SIGN AT 5'-3"AFF

1. ETCHED SIGN FACE LAMINATED TO ACRYLIC BACKING PLAQUE
2. FIELD COLOR: MEDIUM GREY
3. TEXT COLOR: WHITE SILK-SCREENED
4. TEXT STYLE: "HELVETICA BOLD"
5. GRADE 2 BRAILLE
6. TOP OF SIGN AT 5'-3"AFF

4 / AE104 SIGNAGE DETAIL

NOT TO SCALE

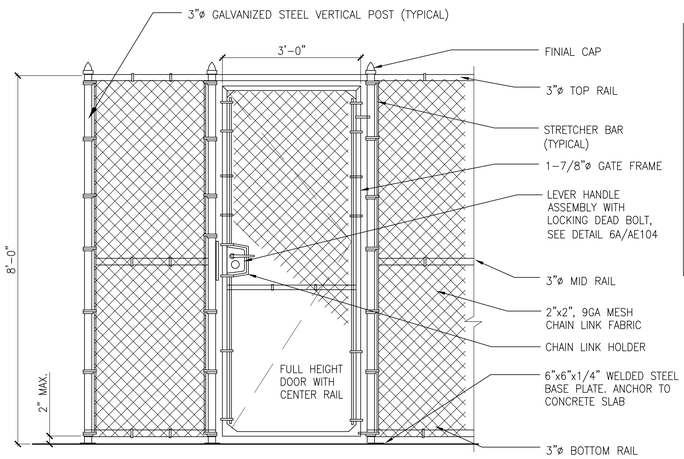

6 / AE104 CHAIN LINK FENCE DETAILS

SCALE: 3/4" = 1'-0"

NOTES:

1. CONTRACTOR SHALL PROVIDE LOCINOX® GATE LOCK LAKQ-U8 WITH SECURITY KEEPER AS BASIS OF DESIGN, OR PRODUCT OF EQUAL PERFORMANCE. LOCK CYLINDER SHALL BE STANLEY/BEST SFIC 3C CYLINDER CORE KEYED PER DIRECTION OF COR/RE.
2. SEE FLOOR PLAN AND NEW WORK NOTE #8 ON SHEET AE101 FOR ADDITIONAL INFORMATION.
3. INTERMEDIATE POST SHALL BE SPACED ACCORDING TO MANUFACTURER'S REQUIREMENTS.

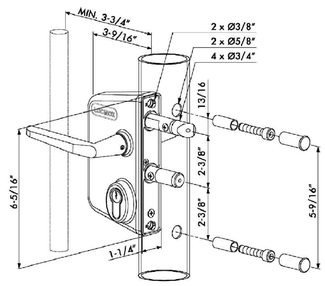

6A / AE104 CHAIN LINK LOCK DETAIL

SCALE: NOT TO SCALE

NEW WORK NOTE SCHEDULE

1. PROVIDE NEW WALL MOUNTED PROTECTIVE BUMPERS AS INDICATED. SEE DETAIL 6/QS101 FOR ADDITIONAL INFORMATION.
2. PROVIDE NEW HEAVY DUTY DOCK BUMPERS ALONG EDGE OF LOADING DOCK. SEE DETAIL 7/QS101 FOR ADDITIONAL INFORMATION.
3. "C" CHANNEL PROTECTIVE EDGING IS PROVIDED ALONG ENTIRE LENGTH OF LOADING DOCK. SEE STRUCTURAL DRAWING S301 FOR ADDITIONAL INFORMATION. APPLY SAFETY YELLOW ANTI-SLIP COATING PER GENERAL NOTE #1 ON SHEET AE101 PRIOR TO INSTALLATION OF DOCK BUMPERS.
4. PROVIDE NEW HEAVY DUTY TRAFFIC GUARDRAIL IN FRONT OF WALL AS INDICATED. SEE DETAIL 5/QS101 FOR ADDITIONAL INFORMATION.
5. PROVIDE NEW HOLLOW METAL INSULATED (HM/INSUL) DOOR AND SIGN. SEE DETAIL 4/AE104 FOR ADDITIONAL INFORMATION.
6. PROVIDE NEW METAL CHAIN LINK CAGE. SEE SHEET AE101 & 6/AE104 FOR ADDITIONAL INFORMATION.
7. PROVIDE NEW STEEL HANDRAILS AS INDICATED. SEE DETAILS 3 & 3A/AE104 FOR ADDITIONAL INFORMATION.
8. NEW LOADING DOCK LEVELER. SEE DETAIL 4/QS101 FOR ADDITIONAL INFORMATION.
9. PROVIDE SWINGING SECURITY DOORS AT EXISTING OPENINGS.
10. PROVIDE NEW "HEDGELINK" SLATS WITHIN EXISTING CHAIN LINK FENCING ALONG RETAINING WALL. HEIGHT TO BE 6'-0". LENGTH AS INDICATED ON CIVIL DRAWING (CS101). CONTRACTOR SHALL PROVIDE SLATS MANUFACTURED BY PEXCO, INC, BLUE SPRUCE COLOR, AS BASIS OF DESIGN, OR SLATS OF EQUAL PERFORMANCE AND QUALITY. SLATS SHALL MATCH EXISTING. CONTRACTOR TO SUBMIT SAMPLE TO CONTRACTING OFFICER AND RESIDENT ENGINEER FOR APPROVAL PRIOR TO INSTALLATION.
11. PROVIDE NEW PANELS IN AREA INDICATED, MATCH EXISTING. ANCHOR TO EXISTING CONCRETE STRUCTURE. APPROXIMATELY (38) PANELS. SEE DETAILS ON SHEET AE105 FOR ADDITIONAL INFORMATION.
12. PROVIDE NEW HEAVY DUTY 36"WIDE x 28"HIGH DRAINABLE WALL LOUVER IN EXISTING OPENING. CONTRACTOR SHALL VERIFY OPENING PRIOR TO PLACING ORDER.

GENERAL NOTE:

(APPLIES TO ALL)

1. WHERE ITEM IS INDICATED AS "BASIS OF DESIGN" IT IS NOT INTENDED TO LIMIT SELECTION. PROVIDE INDICATED ITEM OR ITEM OF EQUAL QUALITY AND PERFORMANCE.

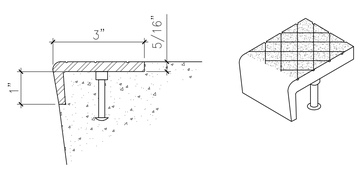

CAST IRON METAL NOSING WITH NON-SLIP SILICON CARBIDE ABRASIVE GRANULES EMBEDDED INTO THE WALKING SURFACE, AND CAST-ON ANCHOR.

5 / AE104 STAIR NOSING DETAIL

NOT TO SCALE

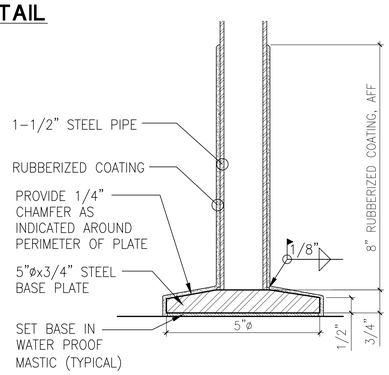

7 / AE104 HANDRAIL BASE PLATE

NOT TO SCALE

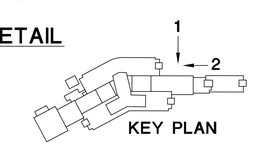

KEY PLAN

FINAL SUBMISSION

Revisions:	Date

CONSULTANTS:

ARCHITECT/ENGINEERS:

BES INCORPORATED
ARCHITECTS
ENGINEERS
CONSTRUCTORS
P.O. BOX 2060, BEAUFORT, S.C. 29901-2060 843-522-2094

Drawing Title: LOADING DOCK EXTERIOR ELEVATIONS AND DETAILS - NEW WORK

Approved: Project Director

Project Title: CORRECT SAFETY DEFICIENCIES AT LOADING DOCK JAMES PETERS MEDICAL CENTER, BRONX, NY

Location

Date: 11/07/2014 | Checked: RLD | Drawn: JMA

Project Number: 526-13-108

Building Number: N/A

Drawing Number: AE104

Dwg. 24 of 38

Office of Construction and Facilities Management

Department of Veterans Affairs

VA FORM 08-6231