SOUTHERN ARIZONA VETERANS AFFAIRS HEALTH CARE SYSTEM

TUCSON, AZ

REPLACE LINEN CHUTE
PROJECT #678-12-250

BUILDING 57

SBBL ARCHITECTURE + PLANNING, LLC
1001 North Alvernon Road #105
Tucson, Arizona 85711

Revisions: Date

REGISTERED ARCHITECT CERTIFICATE NO. 26780 ARIZONA U.S.A.
EXPIRES 3/31/13

PR#11026
SBBL Architecture + Planning
1001 North Alvernon Way #105, Tucson, Arizona 85711
e: sbbl@sbbl.biz

Approved: Director	Approved:
Approved: Associate Director	Approved:
Approved: Chief of Staff	Approved:
Approved: Assistant Director	Approved:
Approved: Chief, Facilities Management	Approved:

Drawing Title: COVER SHEET

Project Title: REPLACE LINEN CHUTE

Building Number: No. 57 | Checked: KI | Drawn: MS

Location: SAVAHCS Tucson, Arizona

BID SET

Date: 05/02/2012

Project No. 678-12-250

DRAWING NO. 57-GI001

Dwg. 1 Of 3

Office of Facilities

Veterans Administration

GENERAL NOTES

1. THE CONTRACTOR SHALL REVIEW ALL DOCUMENTS AND VERIFY ALL DIMENSIONS AND FIELD CONDITIONS AND SHALL CONFIRM THAT WORK IS BUILDABLE AS SHOWN. ANY CONFLICTS OR OMISSIONS, ETC., SHALL BE IMMEDIATELY REPORTED TO THE ARCHITECT FOR CLARIFICATION PRIOR TO SUBMISSION OF A BID.
2. WHEN CONTRACTOR ACCEPTS DELIVERY OF ALL ITEMS NOTED ON PLANS WHETHER IN CONTRACT OR NOT IN CONTRACT, HE SHALL BE RESPONSIBLE FOR LOSS AND/OR DAMAGE TO THESE ITEMS.
3. THE CONTRACTOR SHALL MAINTAIN FOR THE ENTIRE DURATION OF THE WORK ALL EXITS, EXIT LIGHTING, FIRE PROTECTION DEVICES AND ALARMS IN CONFORMANCE WITH ALL APPLICABLE CODES AND ORDINANCES.
4. ALL SAW CUTTING AND CORING LOCATIONS SHALL BE REVIEWED IN FIELD BY OWNER'S REPRESENTATIVE AND COORDINATED WITH THE OWNER PRIOR TO CUTTING/CORING.
5. DURING ALL PHASES OF WORK, DO NOT DISTURB THE DELIVERIES AND FUNCTIONS OF ADJACENT AND NEIGHBORING BUILDINGS.
6. 'TYP.' SHOULD MEAN THAT THE CONDITION IS REPRESENTATIVE FOR SIMILAR CONDITIONS THROUGHOUT. UNLESS OTHERWISE NOTED, DETAILS ARE USUALLY KEYED AND NOTED 'TYP.' ONLY ONCE WHEN THEY FIRST OCCUR.
7. DO NOT SCALE DRAWINGS. WRITTEN DIMENSIONS GOVERN ALL PARTITION LOCATIONS. ALL DOOR AND OPENING LOCATIONS SHALL BE SHOWN ON FLOOR PLAN. IN CASE OF CONFLICT, NOTIFY THE ARCHITECT. FLOOR PLAN BY ARCHITECT SUPERSEDES OTHER PLANS. ALL DIMENSIONS MARKED "CLEAR" SHALL BE MAINTAINED AND SHALL ALLOW FOR THICKNESS OF ALL FINISHES INCLUDING CARPET, PAD, TILE, SHEET VINYL, WAINSCOT, ETC.
8. ALL DIMENSIONS ARE TO FACE OF FRAMING OR MASONRY U.N.O.
9. COLUMN CENTER LINE (OR GRID LINES) ARE SHOWN FOR DIMENSIONING. VERIFY EXACT LOCATIONS IN FIELD.
10. ALL PRODUCTS AND MATERIALS SHALL BE INSTALLED IN ACCORDANCE WITH THE MANUFACTURER'S INSTRUCTIONS UNLESS SPECIFICALLY NOTED TO THE CONTRARY.
11. ALL MATERIALS AND EQUIPMENT FURNISHED BY CONTRACTORS SHALL BE NEW AND FREE FROM DEFECTS.
12. MATERIALS, EQUIPMENT, ETC., NOT INDICATED ON DRAWINGS OR SPECIFIED HEREIN, BUT REQUIRED FOR SUCCESSFUL AND EFFICIENT COMPLETION OF THE INSTALLATION, SHALL BE HELD TO BE IMPLIED AND SHALL BE FURNISHED AND INSTALLED AT NO ADDITIONAL COST TO THE OWNER. NOTIFY ARCHITECT FOR CLARIFICATION OF ANY SUCH ITEMS PRIOR TO BIDDING.
13. THE CONTRACTOR SHALL BE RESPONSIBLE FOR MAINTAINING THE BUILDING AND SITE, CLEANING AND PROVIDING ANY AND ALL SAFETY PROVISIONS TO ENSURE THE PUBLIC SAFETY.
14. DAMAGED WORK MUST BE REPLACED AT NO ADDITIONAL COST TO THE OWNER. CONTRACTOR IS RESPONSIBLE FOR A SITE VISIT LOG OF ALL TRADES NOT UNDER GENERAL CONTRACTOR'S CONTRACT.
15. WHERE REFERENCE IS MADE TO VARIOUS TEST STANDARDS FOR MATERIALS, SUCH STANDARDS SHALL BE THE LATEST EDITION AND/OR ADDENDUM. EXCEPT WHERE NOTED OTHERWISE.
16. ESTABLISH AND VERIFY ALL OPENINGS AND INSERTS FOR ARCHITECTURAL, MECHANICAL, ELECTRICAL AND PLUMBING AND APPROPRIATE TRADES, DRAWINGS AND SUBCONTRACTORS PRIOR TO SUBMISSION OF BID.
17. NOTIFY CONTRACTING OFFICER AND ARCHITECT OF CONFLICT IN DETAILS OR GENERAL NOTES PRIOR TO COMMENCEMENT OF AFFECTED WORK.
18. CONSTRUCTION SHALL CONFORM TO SIMILAR WORK ON THE PROJECT AND TO APPLICABLE CODES.
19. ANY ENGINEERING DESIGN PROVIDED BY OTHERS AND SUBMITTED FOR REVIEW SHALL BEAR THE SEAL OF AN ENGINEER REGISTERED IN ARIZONA.
20. IN CASE OF PLAN LOCATION CONFLICTS BETWEEN DISCIPLINES, NOTIFY THE CONTRACTING OFFICER AND ARCHITECT PRIOR TO BID.
21. ALL MEASUREMENTS ARE SUBJECT TO VERIFICATION IN THE FIELD BY THE CONTRACTOR, AND HE SHALL NOTIFY THE CONTRACTING OFFICER AND SBBL ARCHITECTURE & PLANNING, LLC OF ANY DISCREPANCIES PRIOR TO FABRICATION OR CONSTRUCTION.
22. SHOP DRAWINGS ARE TO COMPLEMENT AND SUPPLEMENT CONSTRUCTION DOCUMENTS. WHEN CONFLICTING INFORMATION IS PROVIDED IN SHOP DRAWINGS AND CONSTRUCTION DOCUMENTS, NOTIFY THE CONTRACTING OFFICER AND THE ARCHITECT PRIOR TO FABRICATION. REVIEW OF SHOP DRAWINGS BY ARCHITECT DOES NOT RELIEVE CONTRACTOR OF RESPONSIBILITY FOR CONFORMANCE WITH CONSTRUCTION DOCUMENTS.
23. ELECTRONIC BACKGROUND FILES OF SOME DRAWINGS ARE AVAILABLE UPON REQUEST AFTER AWARD OF BID. REQUEST SHALL BE MADE THROUGH THE GENERAL CONTRACTOR TO THE CONTRACTING OFFICER. ELECTRONIC FILES ARE PROVIDED AS A MATTER OF CONVENIENCE ONLY. CONTRACTOR SHALL BE RESPONSIBLE FOR CONFORMANCE WITH CONSTRUCTION DOCUMENTS
24. THESE DOCUMENTS ARE NOT TO BE REPRODUCED OR USED FOR ANY PURPOSE OTHER THAN ORIGINALLY ISSUED UNLESS AUTHORIZED IN WRITING BY SBBL ARCHITECTURE & PLANNING, L.L.C.
25. SHEET METAL WORK SHALL CONFORM TO LATEST S.M.A.C.N.A. STANDARDS. SOLDER ALL SEAMS AND CONNECTIONS.
26. COORDINATE CONSTRUCTION ACTIVITIES INCLUDED IN THESE DOCUMENTS WHERE INSTALLATION OF ONE PART OF WORK IS DEPENDENT UPON ANOTHER. SCHEDULE ACTIVITIES TO OBTAIN BEST RESULTS. WHEN NECESSARY, PROVIDE MEMORANDUM TO EACH PARTY INVOLVED.
27. CONTRACTOR TO PROVIDE ADMINISTRATIVE DUTIES, INCLUDING BUT NOT LIMITED TO, SUBCONTRACTORS LIST WITH EMERGENCY CONTACT/NUMBERS, SCHEDULE OF VALUES, LIEN WAIVERS, SCHEDULES (WITH CRITICAL PATH IDENTIFICATION AND SPECIFIC DATES), SUBMITTALS AND SHOP DRAWINGS, AS REQUIRED, WARRANTIES AND GUARANTEE DOCUMENTS, AS-BUILT DRAWINGS.
28. INSPECT MATERIALS AND EQUIPMENT UPON DELIVERY AND AGAIN PRIOR TO INSTALLATION, ALL TRADES SHALL INSPECT CONDITIONS AND SUBSTRATES PRIOR TO INSTALLATION. DO NOT PROCEED UNTIL UNSATISFACTORY CONDITIONS HAVE BEEN CORRECTED. PROVIDE ATTACHMENT AND CONNECTION BY METHODS REQUIRED FOR SECURING WORK. ALLOW FOR EXPANSION AND MOVEMENT.
29. PROTECT WORK FROM ADVERSE WEATHER CONDITIONS. CLEAN WORK AND LUBRICATE PARTS DURING CONSTRUCTION UNTIL CUSTODY IS TRANSFERRED TO THE VA . ENSURE THAT NO PART OF WORK COMPLETED OR IN PROGRESS IS SUBJECT TO HARMFUL, INGEGROUS OR DAMAGING CONDITIONS OF WEATHER, POLLUTION, EXCESSIVE LOADING, CHEMICALS, PUNCTURE, ABRASION, TRAFFIC, BACTERIA, THEFT OR VANDALISM.
30. SPECIAL INSPECTION FEES SHALL BE PAID FOR BY CONTRACTOR. AN OUTSIDE AGENCY SHALL BE USED AS SPECIFIED/APPROVED IN ADVANCE AND GENERAL CONTRACTOR TO COORDINATE AND SCHEDULE ALL SPECIAL INSPECTIONS.
31. PAINT ALL EXPOSED STEEL AND METALS. GRIND SMOOTH ALL WELDS. REMOVE ANY BURRS OR SHARP EDGES.
32. REFUSE GENERATED SHALL BE REMOVED FROM BUILDING ENVELOPE ON A DAILY BASIS, AND FROM THE STAGING AREA NO LESS THAN WEEKLY. COORDINATE LOCATION OF ROLL-OFF DUMPSTER WITH OWNER PRIOR TO BID
33. WHEREVER THE TERM "ARCHITECT" IS NOTED, IT REFERS TO ARCHITECT OF RECORD, SBBL ARCHITECTURE & PLANNING, L.L.C. AND/OR ITS ASSIGNS.
34. THE DRAWINGS AND SPECIFICATIONS INDICATE THE FINISHED PRODUCT, THE CONTRACTOR SHALL BE RESPONSIBLE FOR MEANS, METHODS AND ANY SHORING OR BRACING THAT MAY BE REQUIRED.

SYMBOLS LEGEND

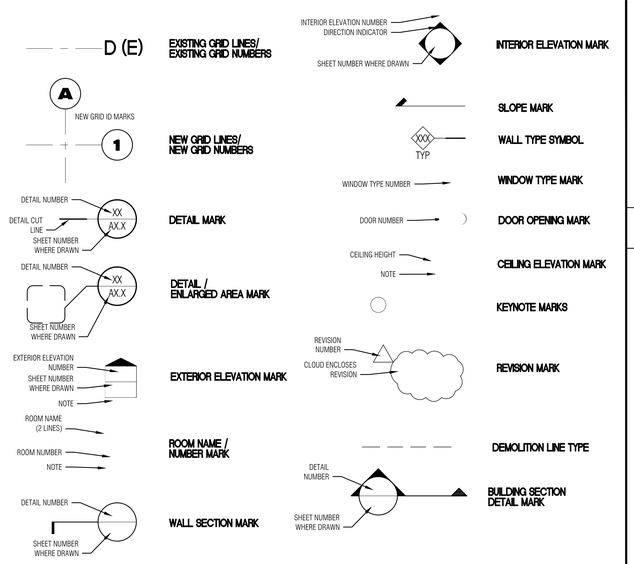

PROJECT TEAM

OWNER
SOUTHERN ARIZONA VA HEALTH CARE SYSTEM
CONTRACTING OFFICER (9-90C)
3601 S. 6TH AVE TUCSON, AZ 85723

ARCHITECT
SBBL ARCHITECTURE AND PLANNING
1001 N. ALVERNON WAY, STE. 105
TUCSON, AZ 85711-1019

BID ITEMS

BID ITEM 1: ALL WORK AS REQUIRED TO REMOVE WALLS, ROOF VENT AND LINEN CHUTE AND REPLACE WITH NEW CHUTE IN EXISTING LOCATION AS SHOWN ON DRAWINGS AND SPECIFICATIONS.

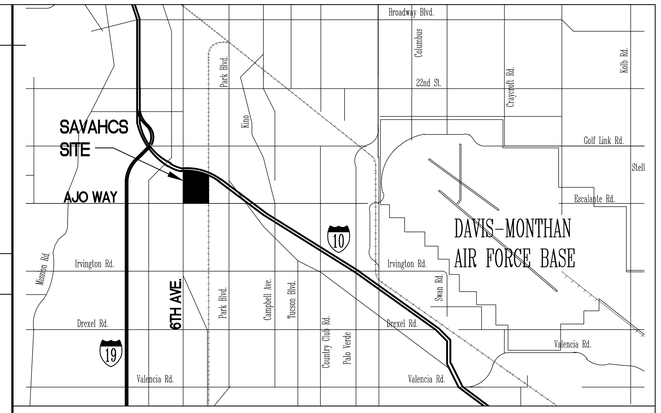

1 LOCATION MAP

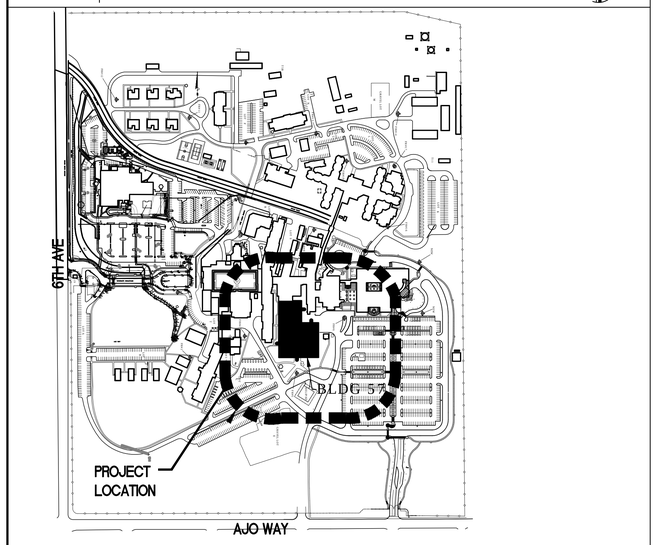

2 PROJECT LOCATION

ABBREVIATIONS

A/C	AIR CONDITIONING	DR	DOOR	MAX	MAXIMUM	STD	STANDARD
A.D.	ACCESS DOOR	DWG	DRAWING	M.B.	MACHINE BOLT	STOR	STORAGE
ADJ	ADJACENT	EA	EACH	MECH	MECHANICAL	STL	STEEL
AFC	ABOVE FINISHED CEILING	EDF	ELECTRIC DRINKING FOUNTAIN	MFG	MANUFACTURER	STRUCT	STRUCTURAL
AFF	ABOVE FINISHED FLOOR	E.F.	EACH FACE	MH	MAGNETIC HOLD-OPEN	SUSP CLG	SUSPENDED CEILING
ALT	ALTERNATE	E.J.	EXPANSION JOINT	MIN.	MINIMUM	TEL	TELEPHONE
ALUM	ALUMINUM	ELEC.	ELECTRICAL	MISC	MISCELLANEOUS	THR	THRESHOLD
AMP	AMPERE	ELEV.	ELEVATION	MO	MASONRY OPENING	T.S.	TUBE STEEL
A.O.	ACCESS OPENING	EQ	EQUAL	MTD	MOUNTED	T.O.	TOP OF
A.P.	ACCESS PANEL	EQUIP	EQUIPMENT	MTG	MOUNTING	T.T.B	TELEPHONE TERMINAL BOARD
APPX.	APPROXIMATE	EXH	EXHAUST	MTL	METAL	TYP.	TYPICAL
ARCH	ARCHITECT(URAL)	EXIST	EXISTING	MULL	MULLION	UNO	UNLESS NOTED OTHERWISE
@	AT	EXP	EXPANSION	N/A	NOT APPLICABLE	VCT	VINYL COMPOSITION TILE
AT	ACOUSTIC CEILING TILE	EXT	EXTERIOR	NIC	NOT IN CONTRACT	VERT	VERTICAL
AUTO	AUTOMATIC	F&I	FURNISH AND INSTALL	NOM	NOMINAL	VIF	VERIFY IN FEILD
AWP	ACOUSTIC WALL PANEL	F.A.	FIRE ALARM	NO.	NUMBER	VT.	VENT
L	ANGLE	F.D.	FLOOR DRAIN	NTS	NOT TO SCALE	VTR	VENT THROUGH ROOF
BD	BOARD	FE	FIRE EXTINGUISHER	O.C.	ON CENTER	V.V.	VA FURNISHED, VA INSTALLED
BG	BUMPER GUARD	FEC	FIRE EXTINGUISHER CABINET	OH	OVERHEAD	V.W.C.	VINYL WALL COVER
BLDG.	BUILDING	FFE	FINISH FLOOR ELEVATION	OPNG	OPENING	W/	WITH
BM	BEAM	FIN	FINISH	OPP	OPPOSITE	W.C.	WATER CLOSET
BOT	BOTTOM	FIXT.	FIXTURE	OSB	ORIENTED STRAND BOARD	WD.	WOOD
BTWN	BETWEEN	FLSH	FLASHING	PCP	PORTLAND CEMENT PLASTER	WDW	WINDOW
CAB	CABINET	FLR	FLOOR	PERP	PERPENDICULAR	WP	WALL PROTECTION
CER	CERAMIC	FLR	FLUORESCENT	PLAS	PLASTER	WT	WEIGHT
C.F.	COLD FORM	FR	FIRE RETARDANT TREATED	P.A.	PLASTIC LAMINATE		
CH	CHANNEL	FS	FLOOR SINK	PLYWD	PLYWOOD		
C.C.	CONTRACTOR FURNISHED/INSTALLED	FT	FEET, FOOT	PNL	PANEL		
CFM	CUBIC FEET PER MIN.	FURR	FURRING	PROJ	PROJECT		
C.I.	CAST IRON	GA	GAUGE	PTN	PARTITION		
C.J.	CONTROL JOINT	GALV	GALVANIZED	PTD	PAINTED		
C.G.V.	CORNER GUARD-VINYL	GND	GROUND	QTY	QUANTITY		
CL	CENTER LINE	GWB	GYPSUM WALL BOARD	R	RISER OR RADIUS		
CLG	CEILING	GYP.	GYPSUM	RA	RETURN AIR		
CLR	CLEAR	H.B.	HOSE BIB	RCP	REFLECTED CEILING PLAN		
CMU	CONCRETE MASONRY UNIT	HCP	HANDICAP	R.D.	ROOF DRAIN		
COL	COLUMN	HDW	HARDWARE	R.E.	RESIDENT ENGINEER		
COMP	COMPRESS(ED)(ION)(IBLE)	HGT	HEIGHT	RECEPT	RECEPTACLE		
CONC	CONCRETE	H.M.	HOLLOW METAL	REC	RECESSED		
CONST	CONSTRUCTION	HORIZ	HORIZONTAL	REF.	REFERENCED		
CONT	CONTINUOUS	H.P.	HORSEPOWER	REINF	REINFORCEMENT		
CPT	CARPET	HR	HANDRAIL	REQ'D	REQUIRED		
CR	CHAIR RAIL	HT	HEIGHT	REV	REVISION		
CSK	COUNTER SINK	H.W.	HOT WATER	R.H.	RIGHT HAND		
C.T.	CERAMIC TILE	IN.	INCH(ES)	RM	ROOM		
C.W.	CLDD WATER	INFO	INFORMATION	R.O.	ROUGH OPENING		
CORR.	CORRIDOR	INS/INSUL	INSULATION	S.C.	SOLID CORE		
DEMO	DEMOLISH(DEMOLITION)	INT	INTERIOR	SCHED	SCHEDULE		
DET.	DETAIL	J.B.	JUNCTION BOX	SECT.	SECTION		
D.F.	DRINKING FOUNTAIN	J.C.	JANITOR CLOSET	SHT.	SHEET		
DIA.	DIAMETER	JT	JOINT	SIM.	SIMILAR		
DIAG.	DIAG	K.O.	KNOCK OUT	SHT MTL	SHEET METAL		
DIM	DIMENSION	L	LONG, LENGTH	SP	SPECIAL		
DISP.	DISPENSER	LBS	POUNDS	SPEC.	SPECIFICATION(S)		
DN	DOWN	MAS	MASONRY	SQ.	SQUARE		
		MAT	MATERIAL	SQ.FT.	SQUARE FEET		
				S. STL	STAINLESS STEEL		

MATERIALS LEGEND

- CONCRETE
- PRECAST CONCRETE
- CONCRETE MASONRY UNIT
- STEEL
- WOOD FRAMING MEMBER
- WOOD BLOCKING / SHIM
- PLYWOOD
- BATT INSULATION
- INSULATION BOARD
- GYPSUM BOARD/STUCCO

CODE REVIEW

GOVERNING BODY:	JCAHO/DEPARTMENT OF VETERAN'S AFFAIRS
GOVERNING CODE:	2009 LIFE SAFETY CODE NFPA101
EXISTING OCCUPANCY:	EXISTING AMBULATORY HEALTH CARE ON FIRST FLOOR, NFPA CH. 21 EXISTING HEALTH CARE ON SECOND FLOOR, NFPA CH. 19 SPRINKLERS THROUGHOUT
TYPE OF CONSTRUCTION:	TYPE II (2, 2, 2)
NFPA 82:	PER CH 5 NFPA 82
5.2.2.4.1	ROOF VENT SHALL BE MIN. 36" ABOVE ROOF WITH SAME CROSS SECTIONAL AREA OF CHUTE
5.2.3.1.2	CHASE ENCLOSURE SHALL BE 1 HOUR RATED FOR LESS THAN 4 STORY BUILDING.
5.2.3.3.2.1	INTAKE DOORS SHALL BE 1 HOUR RATED WITH SELF CLOSING AND LATCHING HARDWARE.
5.2.6.1.1	FIRE SPRINKLER SHALL BE PROVIDED (RE-CONNECT EXISTING)

INDEX

	DRAWING	DRAWING NAME	SHEET #
	GI-001	COVER SHEET	1
	GI-002	GENERAL NOTES, SYMBOLS AND LOCATION MAP	2
ARCHITECTURAL	57-AS001	FLOOR PLANS, SECTION, ELEVATION AND DETAILS	3

Revisions: Date

EXPIRES 3/31/13

PR#11026

SBBL Architecture + Planning
1001 North Alvernon Way #105, Tucson, Arizona 85711
e: sbbl@sbbl.biz

Approved: Director	Approved:
Approved: Associate Director	Approved:
Approved: Chief of Staff	Approved:
Approved: Assistant Director	Approved:
Approved: Chief, Facilities Management	Approved:

Drawing Title: GENERAL NOTES, SYMBOLS AND LOCATION MAP

Project Title: REPLACE LINEN CHUTE

Building Number: No. 57 | Checked: KI | Drawn: MS

Location: SAVAHCS Tucson, Arizona

BID SET

Date: 05/18/2012

Project No. 678-12-250

DRAWING NO. 57-GI002

Dwg. 2 Of 3

Office of Facilities
Veterans Administration

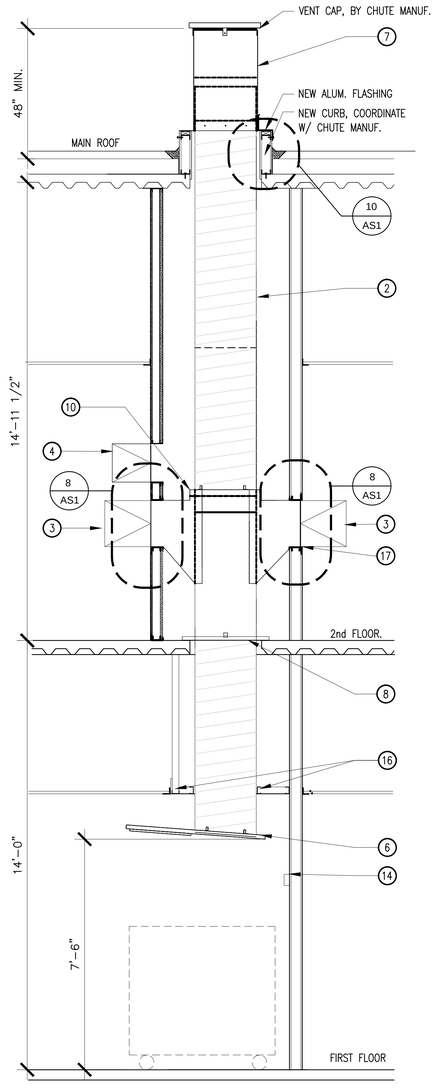

7 SECTION
1/2"=1'-0"

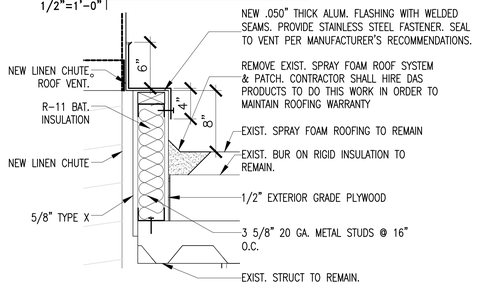

10 DETAIL – ROOF CURB
1/2"=1'-0"

9 NOT USED

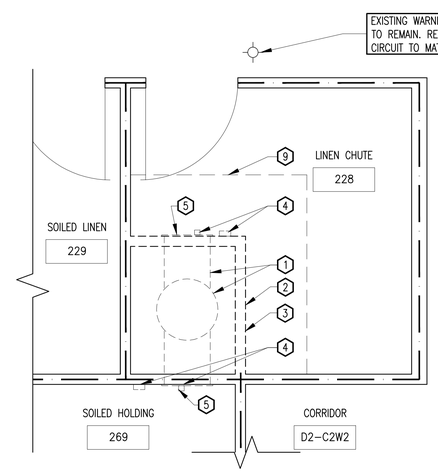

2 SECOND FLOOR PLAN – DEMOLITION PLAN
1/2"=1'-0"

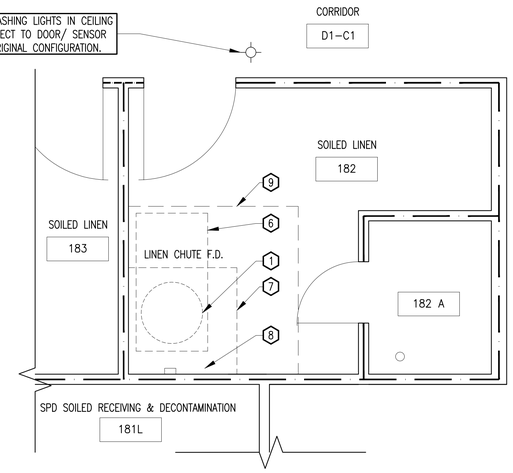

1 FIRST FLOOR PLAN – DEMOLITION PLAN
1/2"=1'-0"

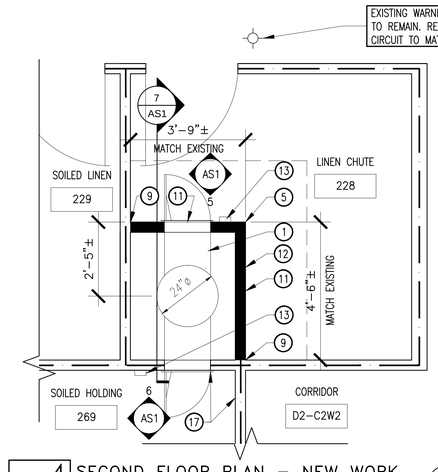

4 SECOND FLOOR PLAN – NEW WORK
1/2"=1'-0"

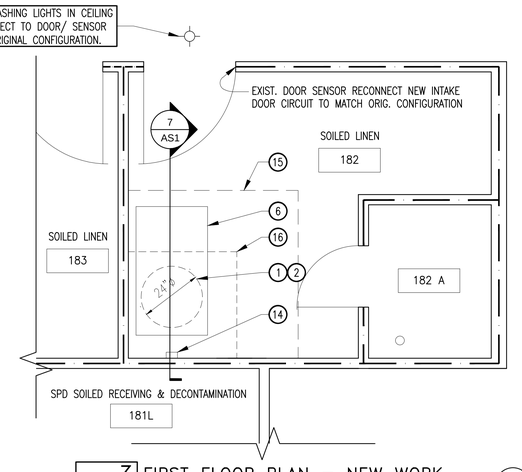

3 FIRST FLOOR PLAN – NEW WORK
1/2"=1'-0"

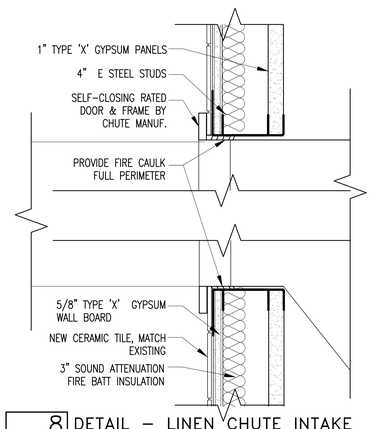

8 DETAIL – LINEN CHUTE INTAKE
3" = 1'-0"

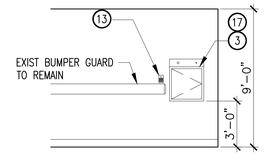

6 LINEN CHUTE – WEST ELEV
1/4"=1'-0" SECOND FLOOR ROOM 269

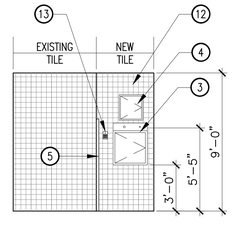

5 LINEN CHUTE – EAST ELEV
1/4"=1'-0" SECOND FLOOR ROOM 228

GENERAL NOTES

OPENINGS TO BE ACCESSIBLE AND FREE OF OBSTRUCTION PRIOR TO INSTALLATION OF CHUTE.

PARTITIONS AROUND CHUTES TO BE ERECTED AFTER CHUTES ARE INSTALLED BY G.C.

WALLS TO BE ERECTED SO INTAKE DOOR FRAMES ARE SQUARE AND FLUSH WITH FINISH WALL.

STRAIGHT SECTIONS MAY BE FURNISHED MECHANICALLY LOCK-SEAMED OR CONTINUOUS BUTT-WELDED.

DOOR OPERATION NOTES

1. ONLY ONE INTAKE DOOR SHALL BE ABLE TO BE OPENED AT A TIME. CONTRACTOR SHALL USE EXIST. CARD READERS AT INTAKE DOORS IN LIEU OF MANUF. PUSH BOTTOM.
2. WHEN THE I.R. SENSOR ON FIRST FLOOR IS TRIPPED IT SHALL NOT ALLOW EITHER INTAKE DOOR TO OPEN. IT WILL ALSO ACTIVATE FLASHING CEILING LIGHTS. I.R. SENSOR SHALL TRIP WHEN DOOR TO ROOM IS OPEN, WHEN CART IS FULL, WHEN SOMEONE IS STANDING BY CHUTE, WHEN FIRE DOOR IS CLOSED AT CHUTE DISCHARGE OR WHEN SOMEONE IS STANDING IN FRONT OF SENSOR. (PROVIDE SWITCH AT HORIZONTAL FIRE DOOR).
3. WHEN DOOR TO ROOM 182 IS OPEN, THE INTAKE DOORS SHALL NOT OPEN AND THE CEILING LIGHTS WILL FLASH.
4. IF EITHER INTAKE DOOR IS OPEN, THE OTHER INTAKE DOOR SHALL REMAIN LOCKED UNTIL DOOR IS CLOSED. NO CEILING LIGHTS WILL FLASH.
5. IF FIRE DAMPER AT DISCHARGE IS CLOSED, THAN INTAKE DOORS WILL NOT OPEN & CEILING WARNING LIGHTS WILL FLASH. PROVIDE SENSOR OR SWITCH BY MANUFATURER.
6. VA SHOPS PERSONNEL WILL BE AVAILABLE TO CONSULT ON EXIST. OPERATION.

LEGEND

1 HR RATED

DEMOLITION KEYNOTES

1. REMOVE EXISTING LINEN CHUTE. ALL SUPPORT BRACKETS, ROOF VENT AND ROOF CURB.
2. REMOVE SHAFT WALL.
3. REMOVE CERAMIC TILE ON SHAFT WALL.
4. REMOVE AND SALVAGE ELECTRONIC CARD READER AND LATCH FOR RE-INSTALLATION. (LATCH TO BE RETURNED TO OWNER)
5. REMOVE EXIST. INTAKE/DOORS ACCESS.
6. REMOVE HORIZONTAL ROLLING FIRE DOOR AND SUPPORT BRACKETS.
7. REMOVE & REPLACE EXIST. SOFFIT FRAMING AND METAL CLG. PANEL ABOVE AS REQ'D FOR NEW WORK
8. REMOVE AND SALVAGE SAFETY SENSOR FOR RE-CONNECTION.
9. REMOVE AND RE-INSTALL EXIST. SUSP. GRID CEILING AS REQ'D FOR NEW WORK

NEW WORK KEYNOTES

1. NEW LINEN CHUTE SYSTEM. REF. SPECIFICATIONS
2. GRAVITY CHUTE 24"ø PER SPECS.
3. FIRE RATED INTAKE DOOR WITH STAINLESS STEEL FRAME, SIDE HINGED. CONNECT ELECTRIC INTERLOCK TO EXIST. CARD READER. SEE DOOR OPERATION NOTES & SPECS FOR ADD'L REQUIREMENTS.
4. FIRE RATED ACCESS DOORS FOR FIRE SPRINKLER BY CHUTE MANUF. COORDINATE LOCATION WITH MANUF.
5. NEW STAINLESS STEEL CORNER GUARD. 3" x 3" x 72", SELF ADHERED. EQ. TO ROCK WOOD 290
6. MANUF. STANDARD FIRE RATED HORIZONTAL ROLLING DISCHARGE DOOR W/ FUSIBLE LINK. PROVIDE SWITCH ON DOOR TO ACTIVATE DOOR LOCKS ABOVE WHEN FIRE DOOR CLOSES. SEE DOOR OPERATION NOTES & SPECS FOR ADD'L REQMTS.
7. VENT 24" DIA. ALUM. W/ COMBINATION BIRD-SCREEN/SPARK ARRESTOR CAP. PROVIDE CURB FLASHING. SEE DETAIL 10/57-AS1
8. STRUCTURAL STEEL ANGLE FRAME TO SUPPORT CHUTE AT EACH FLOOR. PROVIDE CLIPS WELDED TO CHUTE TO REST ON FRAME. PROVIDE MANUF. STANDARD METAL FLOOR CLOSURE PLATE. REF. SPECS.
9. PATCH EXISTING CERAMIC WALL TILE AS REQ'D COLOR TO MATCH EXIST.
10. FIRE SPRINKLER HEAD INSTALLED IN SPRAY HEAD CHAMBER ABOVE INTAKE DOOR LOCATED ON 2ND FLOOR. RECONNECT TO EXISTING FIRE SPRINKLER LINE.
11. PATCH EXIST VCT AS REQ'D TO MATCH EXISTING.
12. PROVIDE NEW CERAMIC WALL TILE ON NEW 1 HR. RATED 4" SHAFT WALL.
13. REINSTALL ELECTRONIC CARD READER AND RE-CONNECT TO SENSOR ON FIRST FLOOR & DOOR INTERLOCK SYSTEM. SEE DOOR OPERATION NOTES FOR ADD'L REQMT'S
14. PROVIDE NEW SAFETY I.R. SENSOR TO BE RE-CONNECTED TO INTERLOCK SYSTEM. FIELD VERIFY LOCATION. SECURE WIRE TO NEW SHAFT WALL/LINEN CHUTE. SEE DOOR OPERATION NOTES FOR ADD'L REQUIREMENTS.
15. RE-INSTALL/PROVIDE NEW CEILING GRID AS REQUIRED TO MATCH EXIST.
16. EXISTING SOFFIT FRAMING AND SHEET METAL SOFFIT PANEL TO REMAIN, REMOVE AND RE-INSTALL AS REQUIRED FOR NEW WORK. PROVIDE NEW PAINTED FINISH.
17. MODIFY EXIST. RATED GWB WALL AS REQ'D FOR NEW WORK. PATCH AND PAINT ENTIRE WALL TO MATCH EXIST. FIRECAULK AROUND NEW DOOR.

KEY PLAN

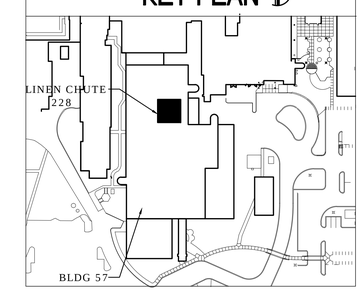

FULLY SPRINKLERED BID SET

Revisions:	Date

CONSULTANTS:

REGISTERED ARCHITECT 25789 THOMAS SAYLER-BROWN ARIZONA U.S.A. EXPIRES 3/31/13

ARCHITECT/ENGINEERS:

SBBL Architecture + Planning
1001 North Alvernon Way #105, Tucson, Arizona 85711
e: sbbl@sbbl.biz

Drawing Title	FLOOR PLANS, SECTION, ELEVATION AND DETAILS
Approved:	
Project Title	REPLACE LINEN CHUTE
Project Number	678-12-250
Building Number	57
Location	SAVAHCS Tucson, Arizona
Date	05/18/2012
Checked	KI
Drawn	MS
Drawing Number	57-AS001
Dwg. 3 of 3	

Office of Construction and Facilities Management
Department of Veterans Affairs

VA FORM 08-6231