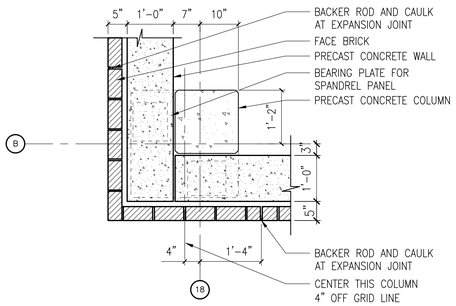

A1 PLAN DETAIL AT C.I.P.
3/4"=1'-0"

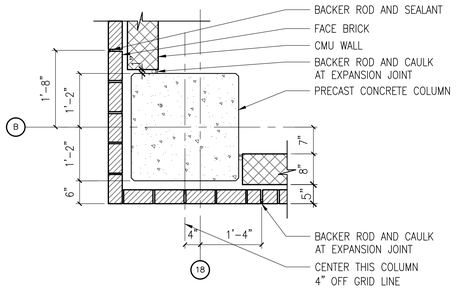

A2 PLAN DETAIL AT C.I.P.
3/4"=1'-0"

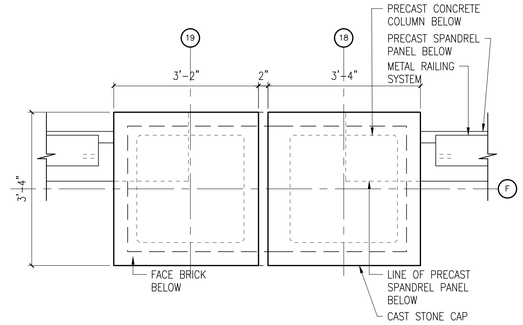

A3 PLAN DETAIL AT CAST STONE CAP
3/4"=1'-0"

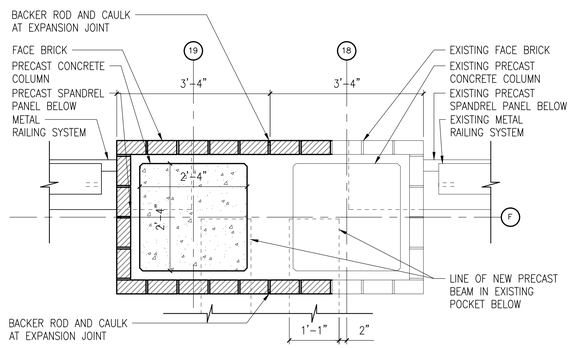

A4 PLAN DETAIL AT BRICK VENEER
3/4"=1'-0"

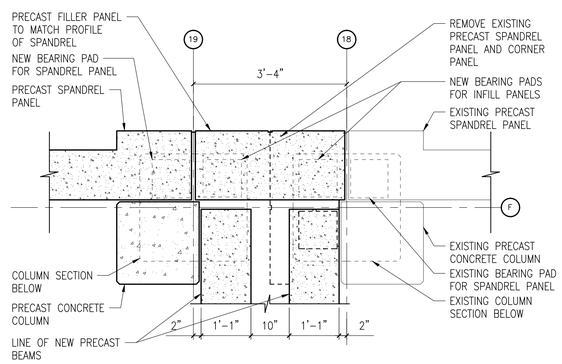

A5 PLAN DETAIL AT SPANDREL PANEL
3/4"=1'-0"

CONTRACTOR WILL PROVIDE ALL DOVETAIL ANCHORS, SLOTS AND ASSOCIATED TIES AT ALL MASONRY WALL CONSTRUCTION. FLEXIBLE DOVETAIL ANCHORS, SLOTS AND TIES AS MANUFACTURED BY HOHMANN & BARNARD, INC. OR VA APPROVED EQUAL. REFER TO PRODUT DESCRIPTION AT DETAIL 8/A-503. REFER TO SPECIFICATIONS FOR ADDITIONAL INFORMATION.

1. AT PRECAST CONCRETE COLUMNS PROVIDE DOVETAIL SLOTS. REFER TO DETAIL B1/A-501
2. AT PRECAST CONCRETE WALL PANELS PROVIDE DOVETAIL SLOTS. REFER TO DETAIL 8/A-503
3. AT CAST IN PLACE CONCRETE FOUNDATION WALLS PROVIDE DOVETAIL SLOTS. SIMILAR TO DETAIL 8/A-503.

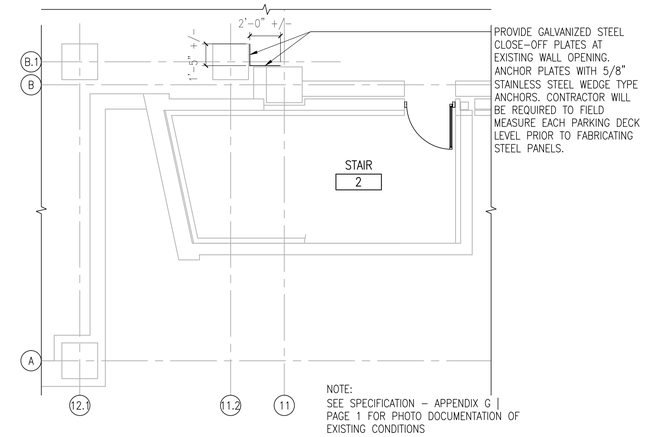

1 PARTIAL PLAN AT STAIR 2 - LEVEL A
1/4"=1'-0"

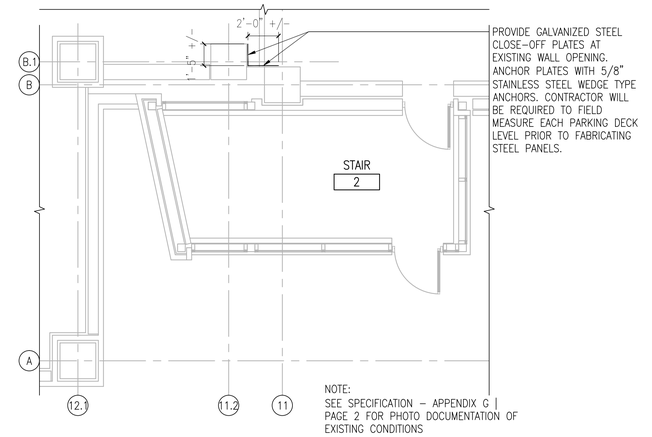

2 PARTIAL PLAN AT STAIR 2 - LEVEL B
1/4"=1'-0"

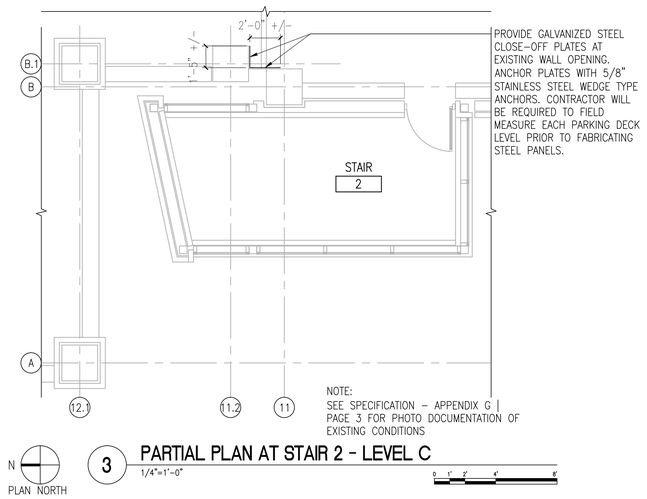

3 PARTIAL PLAN AT STAIR 2 - LEVEL C
1/4"=1'-0"

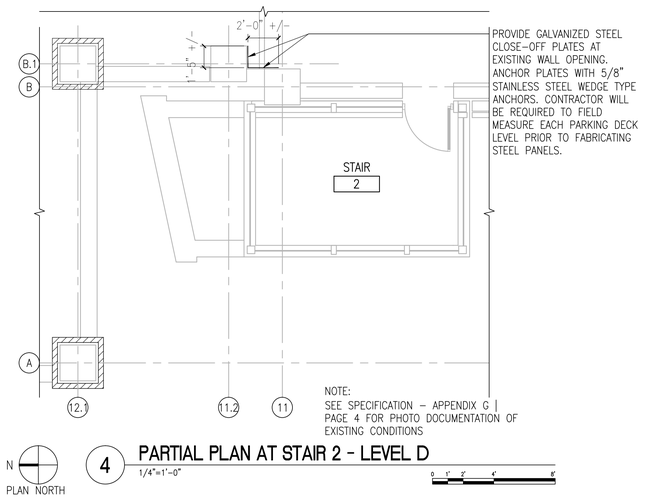

4 PARTIAL PLAN AT STAIR 2 - LEVEL D
1/4"=1'-0"

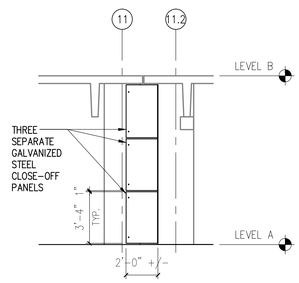

5 ELEVATION AT STAIR 2 - LEVEL A
1/4"=1'-0"

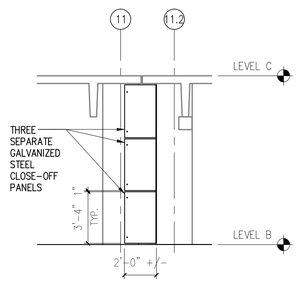

6 ELEVATION AT STAIR 2 - LEVEL B
1/4"=1'-0"

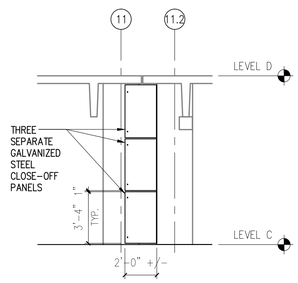

7 ELEVATION AT STAIR 2 - LEVEL C
1/4"=1'-0"

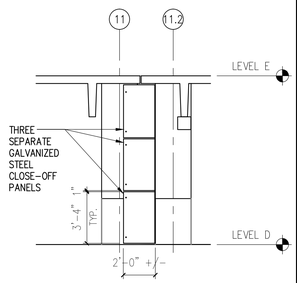

8 ELEVATION AT STAIR 2 - LEVEL D
1/4"=1'-0"

100% FINAL BID DOCUMENTS	08-18-2017
100% BID DOCUMENTS-NOT FOR CONSTRUCTION	07-24-2017
95% CONSTRUCTION DOCUMENTS SUBMISSION	06-15-2017
65% DESIGN DEVELOPMENT SUBMISSION	04-19-2017
35% SCHEMATIC DESIGN SUBMISSION	03-06-2017
Revisions:	Date

CONSULTANTS:

WALKER PARKING CONSULTANTS
525 Avis Drive, Suite 1
Ann Arbor, MI 48108

MIDWESTERN CONSULTING
3815 Plaza Drive Ann Arbor, Michigan 48108
(734) 995-0200 • www.midwesternconsulting.com
Land Development • Land Survey • Institutional • Municipal
Wireless Communications • Transportation • Landfill Services

KEYPLAN

ARCHITECT + ENGINEERS:

BANCROFT ARCHITECTS + ENGINEERS
700 Nicholas Blvd., Suite 300
Elk Grove Village, IL 60007
Telephone : 847.952.9362
www.bancroft-ae.com
Bancroft-AE Project No. 16-121

VA CONTRACT NO. VA250-17-C-0008

Drawing Title: ARCHITECTURAL DETAILS

Approved: Project Director

Project Title: CONSTRUCT NORTH PARKING STRUCTURE

Location: ANN ARBOR, MICHIGAN

Date: 08-18-2017 | Checked: EM | Drawn: DTB

Project Number: 506-331

Building Number: 29

Drawing Number: A-502

Office of Construction and Facilities Management

Department of Veterans Affairs

VA FORM 08-6231

100% FINAL BID DOCUMENTS