ELECTRICAL SYSTEMS SHEET INDEX	
SHEET NUMBER	DRAWINGS TITLE
ES-000	SYMBOLS LIST, AND SHEET INDEX
ES-001	SITE PLAN - ELECTRICAL
ES-101.1	FLOOR PLAN SOUTH/WEST WING - POWER
ES-101.2	FLOOR PLAN NORTH WING - POWER
ES-101.3	FLOOR PLAN EAST WING - POWER
ES-101.4	ENLARGED LOADING DOCK PLAN - POWER
ES-102.1	FLOOR PLAN SOUTH/WEST WING - LIGHTING
ES-102.2	FLOOR PLAN NORTH WING - LIGHTING
ES-102.3	FLOOR PLAN EAST WING - LIGHTING
ES-102.4	ENLARGED LOADING DOCK PLAN - LIGHTING
ES-103	ROOF PLAN
ES-104.1	LUMINAIRE SCHEDULE
ES-104.2	PANEL SCHEDULES
ES-105	ELECTRICAL DETAILS
ES-105.1	ELECTRICAL DETAILS
ES-106	ONE LINE DIAGRAM

ELECTRICAL SYMBOLS LIST

SYMBOL	ABBR.	DESCRIPTION
		120 VOLT, DUPLEX RECEPTACLE, MOUNTED AT STANDARD HEIGHT.
		120 VOLT, DUPLEX RECEPTACLE, MOUNTED ABOVE STANDARD HEIGHT.
		120 VOLT, DOUBLE DUPLEX RECEPTACLE, MOUNTED AT STANDARD HEIGHT.
		120 VOLT, DOUBLE DUPLEX RECEPTACLE, MOUNTED ABOVE STANDARD HEIGHT.
		120 VOLT, DUPLEX RECEPTACLE, SAFETY TYPE.
A		SPECIAL POWER OUTLET. SUBSCRIPT INDICATES TYPE.
		EQUIPMENT CONNECTION.
		MOTOR CONNECTION.
		TRANSFORMER.
		DISCONNECT SWITCH.
		FUSED DISCONNECT SWITCH.
		COMBINATION MOTOR STARTER.
FB A		FLUSH FLOOR BOX. SUBSCRIPT INDICATES TYPE.
		BRANCH PANEL. SURFACE MOUNTED.
		BRANCH PANEL. FLUSH MOUNTED.
		WIRING RUN IN OR UNDER FLOOR OR GROUND.
		CONDUIT STUB OR CAP.
		HOME RUN TO PANEL.
PM–12		PLUGMOLD. NUMBER INDICATES OUTLET SPACING IN INCHES.
		CONDUCTORS IN CONDUIT. THREE SHOWN (HOT, NEUTRAL, & GROUND), #12 U.O.N.
HT		HEAT TRACE.
		EQUIPMENT CONNECTION.
2		FEEDER DESIGNATOR. SEE SCHEDULE FOR DETAILS.
		CEILING, SURFACE MOUNT LUMINAIRE. SEE LUMINAIRE SCHEDULE FOR DETAILS.
		CEILING, RECESSED LUMINAIRE. SEE LUMINAIRE SCHEDULE FOR DETAILS.
		CEILING, SURFACE MOUNT LUMINAIRE ON EGRESS CIRCUIT. SEE LUMINAIRE SCHEDULE FOR DETAILS.
		CEILING, RECESSED LUMINAIRE ON EGRESS CIRCUIT. SEE LUMINAIRE SCHEDULE FOR DETAILS.
		CEILING, SURFACE MOUNT LUMINAIRE. CIRCLE REPRESENTS APPROXIMATE SIZE. SEE LUMINAIRE SCHEDULE FOR DETAILS.
		CEILING, RECESSED LUMINAIRE. CIRCLE REPRESENTS APPROXIMATE SIZE. SEE LUMINAIRE SCHEDULE FOR DETAILS.
		CEILING, SURFACE MOUNT LUMINAIRE ON EGRESS CIRCUIT. CIRCLE REPRESENTS APPROXIMATE SIZE. SEE LUMINAIRE SCHEDULE FOR DETAILS.
		CEILING, RECESSED LUMINAIRE ON EGRESS CIRCUIT. CIRCLE REPRESENTS APPROXIMATE SIZE. SEE LUMINAIRE SCHEDULE FOR DETAILS.
		LINEAR FIXTURE, SURFACE MOUNT.
		LINEAR FIXTURE, SURFACE MOUNT ON EGRESS CIRCUIT.
		LINEAR FIXTURE, PENDANT MOUNT. QUANTITY AND APPROXIMATE LOCATION OF PENDANTS SHOWN.
		LINEAR FIXTURE, PENDANT MOUNT ON EGRESS CIRCUIT. QUANTITY AND APPROXIMATE LOCATION OF PENDANTS SHOWN.
		SURFACE, WALL MOUNT FIXTURE.
		RECESSED, WALL MOUNT FIXTURE.
		RECESSED, WALL MOUNT FIXTURE ON EGRESS CIRCUIT.
		STRIP FIXTURE.
		EXIT SIGN, WALL MOUNTED. SHADED AREAS INDICATE FACES.
		EXIT SIGN, CEILING MOUNTED. SHADED AREAS INDICATE FACES.
		ROADWAY/PARKING FIXTURE, ROUND POLE, SQUARE HEAD. 2 HEAD FIXTURE SHOWN.
$		SWITCH. SINGLE POLE.
$3		SWITCH. THREE WAY.
$K		SWITCH. SINGLE POLE. KEY OPERATED.
$LV		SWITCH. LOW VOLTAGE TYPE.
OS A		OCCUPANCY SENSOR. WALL MOUNT. SUBSCRIPT INDICATES TYPE. SEE SPECIFICATIONS.
OS A		OCCUPANCY SENSOR. CEILING MOUNT. SUBSCRIPT INDICATES TYPE. SEE SPECIFICATIONS.
PC A		PHOTO SENSOR. SUBSCRIPT INDICATES TYPE. SEE SPECIFICATIONS.
D A		DIMMER SWITCH. SUBSCRIPT INDICATES TYPE. SEE SPECIFICATIONS.
$T		TIME SWITCH.
3		NOTE REFERENCE.
3 ES-2		DETAIL AND SHEET NUMBER REFERENCE.
	(N)	INDICATES NEW DEVICE.
	(E)	INDICATES EXISTING DEVICE TO REMAIN.
	(R)	INDICATES EXISTING DEVICE TO BE REMOVED.
	GFI	GROUND FAULT INTERRUPTER.
	SF	SUPPLY FAN.
	EF	EXHAUST FAN.
	WP	WEATHERPROOF.
	AFF	ABOVE FINISHED FLOOR.
	GRD	GROUND.
	CU	COPPER.

Revisions: | Date

CONSULTANTS:

BALZHISER & HUBBARD ENGINEERS
MECHANICAL • ELECTRICAL • CIVIL • SURVEYORS
100 WEST 13TH AVENUE EUGENE, OR 97401
P: 541-686-8678
F: 541-343-5303
2100–031–10es–000.dwg

REGISTERED PROFESSIONAL ENGINEER 50476
DIGITAL SIGNATURE
OREGON
JULY 21, 1995
KEVIN M. WARE
EXPIRES 6/30/12

ARCHITECT/ENGINEERS:

Tina Ely architect
2915 Wingate Street / Eugene, OR 97408
541.521.2477 / TinaEly@comcast.net

Drawing Title: SYMBOLS LIST, SHEET INDEX

Approved: Project Director

Project Title: SEISMIC REPLACEMENT BLDG 2 PHASE 1 MINOR ACUTE PSYCHIATRIC WARD

Location: ROSEBURG, OREGON

Date: 30 APR 2012 | Checked: KMW | Drawn: JSG

VA Project Number: 653-322

Building Number: 086

Sheet Number: ES-000

Office of Construction and Facilities Management

Department of Veterans Affairs

VA FORM 08-6231

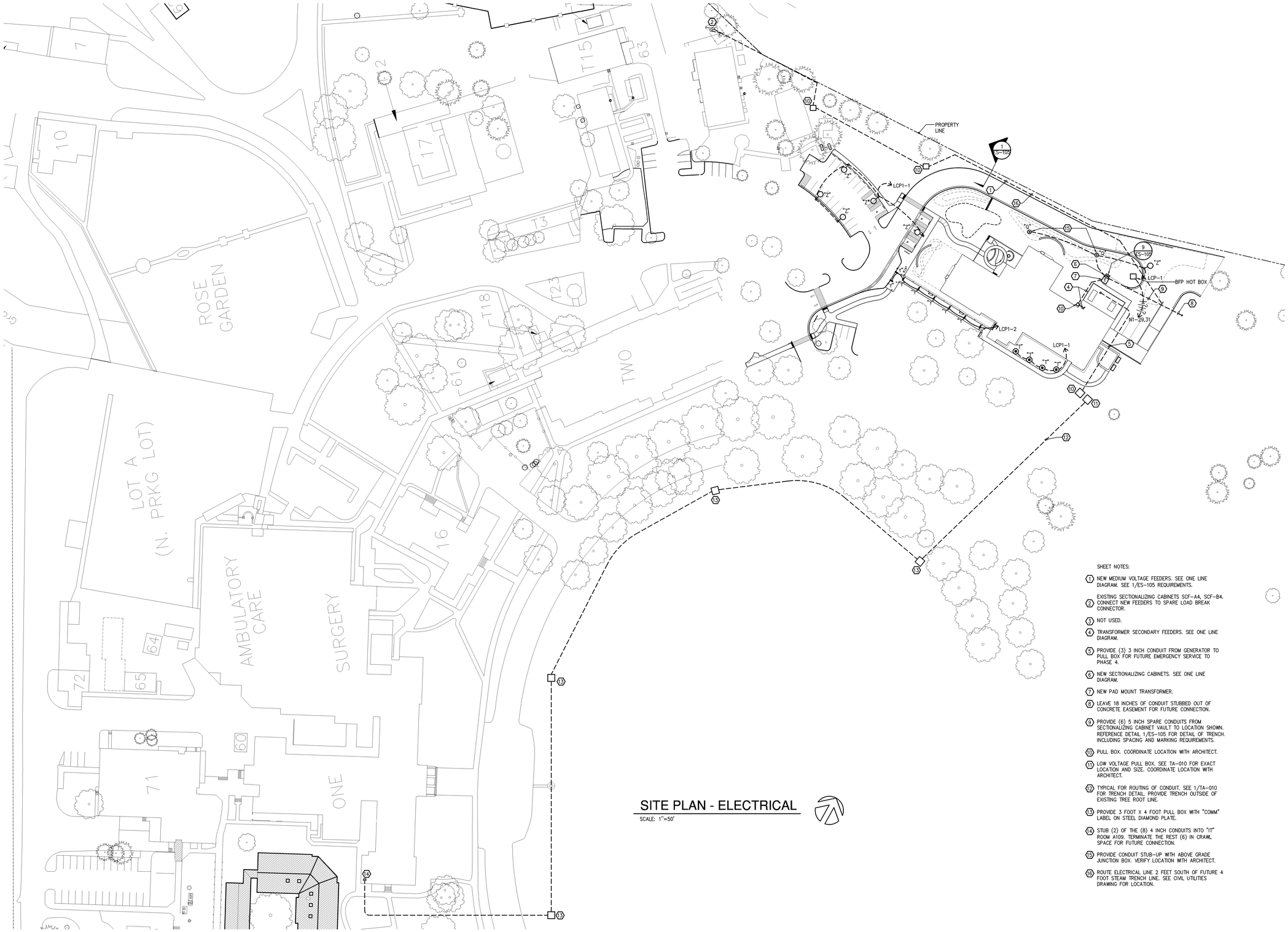

SITE PLAN - ELECTRICAL

SCALE: 1"=50'

SHEET NOTES:

1. NEW MEDIUM VOLTAGE FEEDERS. SEE ONE LINE DIAGRAM. SEE 1/ES-105 REQUIREMENTS.
2. EXISTING SECTIONALIZING CABINETS SCF-A4, SCF-B4. CONNECT NEW FEEDERS TO SPARE LOAD BREAK CONNECTOR.
3. NOT USED.
4. TRANSFORMER SECONDARY FEEDERS. SEE ONE LINE DIAGRAM.
5. PROVIDE (3) 3 INCH CONDUIT FROM GENERATOR TO PULL BOX FOR FUTURE EMERGENCY SERVICE TO PHASE 4.
6. NEW SECTIONALIZING CABINETS. SEE ONE LINE DIAGRAM.
7. NEW PAD MOUNT TRANSFORMER.
8. LEAVE 18 INCHES OF CONDUIT STUBBED OUT OF CONCRETE EASEMENT FOR FUTURE CONNECTION.
9. PROVIDE (6) 5 INCH SPARE CONDUITS FROM SECTIONALIZING CABINET VAULT TO LOCATION SHOWN. REFERENCE DETAIL 1/ES-105 FOR DETAIL OF TRENCH. INCLUDING SPACING AND MARKING REQUIREMENTS.
10. PULL BOX. COORDINATE LOCATION WITH ARCHITECT.
11. LOW VOLTAGE PULL BOX. SEE TA-010 FOR EXACT LOCATION AND SIZE. COORDINATE LOCATION WITH ARCHITECT.
12. TYPICAL FOR ROUTING OF CONDUIT. SEE 1/TA-010 FOR TRENCH DETAIL. PROVIDE TRENCH OUTSIDE OF EXISTING TREE ROOT LINE.
13. PROVIDE 3 FOOT X 4 FOOT PULL BOX WITH "COMM" LABEL ON STEEL DIAMOND PLATE.
14. STUB (2) OF THE (8) 4 INCH CONDUITS INTO "IT" ROOM A109. TERMINATE THE REST (6) IN CRAWL SPACE FOR FUTURE CONNECTION.
15. PROVIDE CONDUIT STUB-UP WITH ABOVE GRADE JUNCTION BOX. VERIFY LOCATION WITH ARCHITECT.
16. ROUTE ELECTRICAL LINE 2 FEET SOUTH OF FUTURE 4 FOOT STEAM TRENCH LINE. SEE CIVIL UTILITIES DRAWING FOR LOCATION.

Revisions:	Date

CONSULTANTS:

BALZHISER & HUBBARD ENGINEERS
MECHANICAL • ELECTRICAL • CIVIL • SURVEYORS
100 WEST 13TH AVENUE EUGENE, OR 97401
P: 541-686-8678
F: 541-343-5903
2100-031-10es-001.dwg

REGISTERED PROFESSIONAL ENGINEER 50476 OREGON JULY 21, 1989 KEVIN M. WARE
DIGITAL SIGNATURE
EXPIRES 6/30/12

ARCHITECT/ENGINEERS:

Tina Ely architect
2915 Wingate Street / Eugene, OR 97408
541.521.2477 / TinaEly@comcast.net

Drawing Title	SITE PLAN - ELECTRICAL
Approved: Project Director	
Project Title	SEISMIC REPLACEMENT BLDG 2 PHASE 1 MINOR ACUTE PSYCHIATRIC WARD
Location	ROSEBURG, OREGON
Date	30 APR 2012
Checked	KMW
Drawn	JSG
VA Project Number	653-322
Building Number	086
Sheet Number	ES-001

Office of Construction and Facilities Management

Department of Veterans Affairs

VA FORM 08-6231

3 3/4" CD SEE PL-101.3 FOR CONTINUATION

4 3/4" CD TO FLOOR SINK IN MECHANICAL ROOM. DISCHARGE 1" ABOVE RIM OF FLOOR SINK.

5 NATURAL GAS METER - TOTAL CONNECTED LOAD APPROX. 2,000 CFH AT 2 PSIG

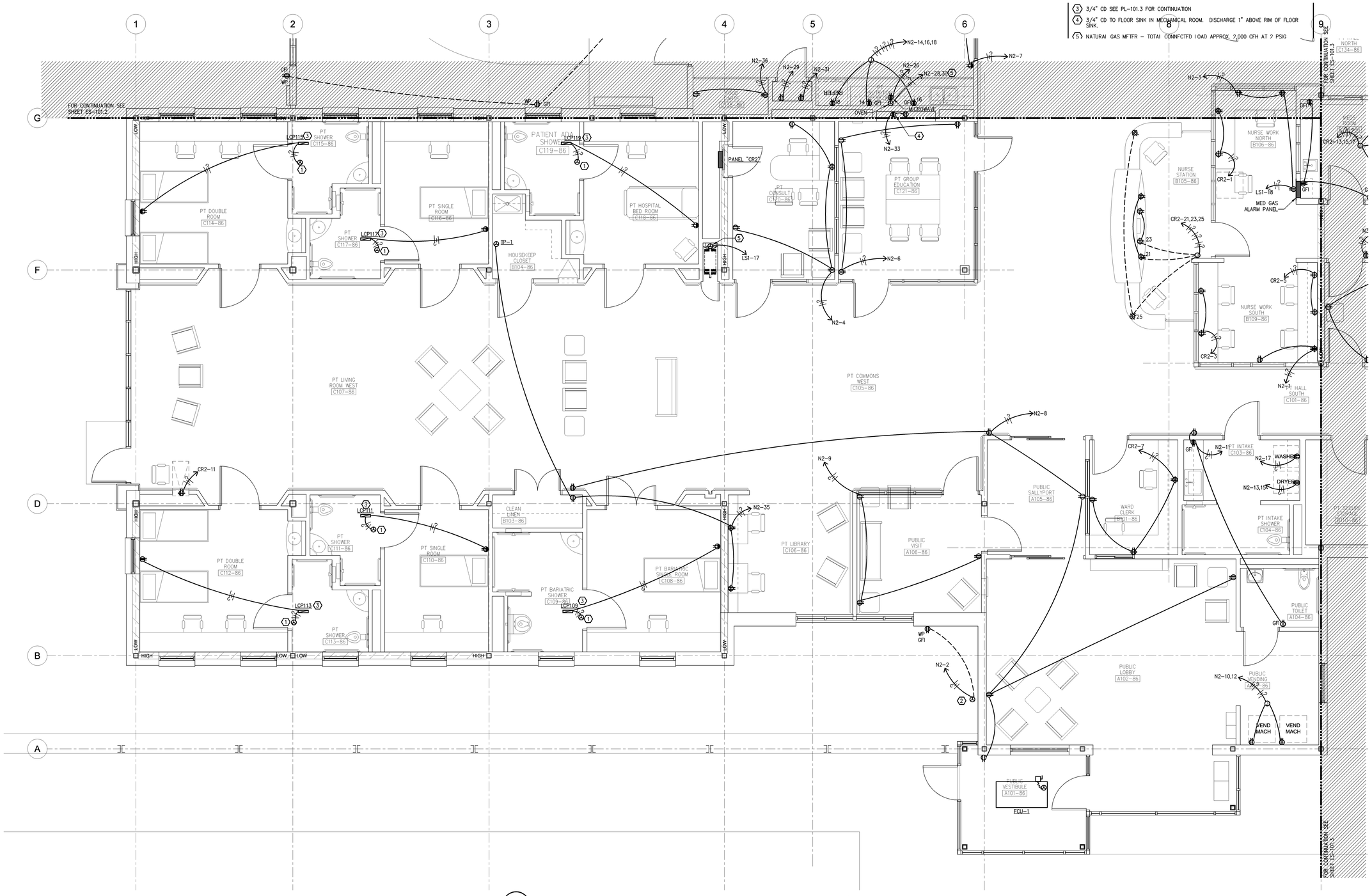

FLOOR PLAN NOTES:

1. SOLENOID VALVE ELECTRICAL CONNECTION. REFER TO PLUMBING DRAWINGS FOR EXACT LOCATION.
2. POWER CONNECTION TO WATER FEATURE. REFER TO LANDSCAPE PLANS.
3. LCP FOR ON/OFF CONTROL OF ROOM OUTLET, LIGHTS AND SOLENOID. SEE LIGHTING PLANS FOR LIGHTING CONTROL OF ROOM AND BRANCH CIRCUIT INFORMATION. SEE 8/ES-105 FOR CIRCUITING.
4. FLAT PANEL OUTLET. ELECTRICAL TO PROVIDE BRANCH CIRCUIT AND RECEPTACLE AT PANEL'S OUTLET BOX.
5. WON-DOOR ELECTRICAL CONNECTION. REFER TO DETAIL 6/ES-105 FOR DETAILED WIRING CONNECTIONS.

1 FLOOR PLAN SOUTH/WEST WING - POWER

SCALE: 1/4"=1'-0"

Revisions:	Date

CONSULTANTS:

BALZHISER & HUBBARD ENGINEERS
MECHANICAL • ELECTRICAL • CIVIL • SURVEYORS
100 WEST 13TH AVENUE EUGENE, OR 97401
P: 541-686-8678
F: 541-343-5903
2100-031-10es-101.1_4.dwg

REGISTERED PROFESSIONAL ENGINEER 50476 OREGON JULY 21, 1986 KEVIN M. WARE
DIGITAL SIGNATURE
EXPIRES 6/30/12

ARCHITECT/ENGINEERS:

Tina Ely architect
2915 Wingate Street / Eugene, OR 97408
541.521.2477 / Tina.Ely@comcast.net

Drawing Title: FLOOR PLAN SOUTH/WEST WING - POWER

Approved: Project Director

Project Title: SEISMIC REPLACEMENT BLDG 2 PHASE 1 MINOR ACUTE PSYCHIATRIC WARD

Location: ROSEBURG, OREGON

Date: 30 APR 2012 | Checked: KMW | Drawn: JSG

VA Project Number: 653-322

Building Number: 086

Sheet Number: ES-101.1

Office of Construction and Facilities Management

Department of Veterans Affairs

VA FORM 08-6231

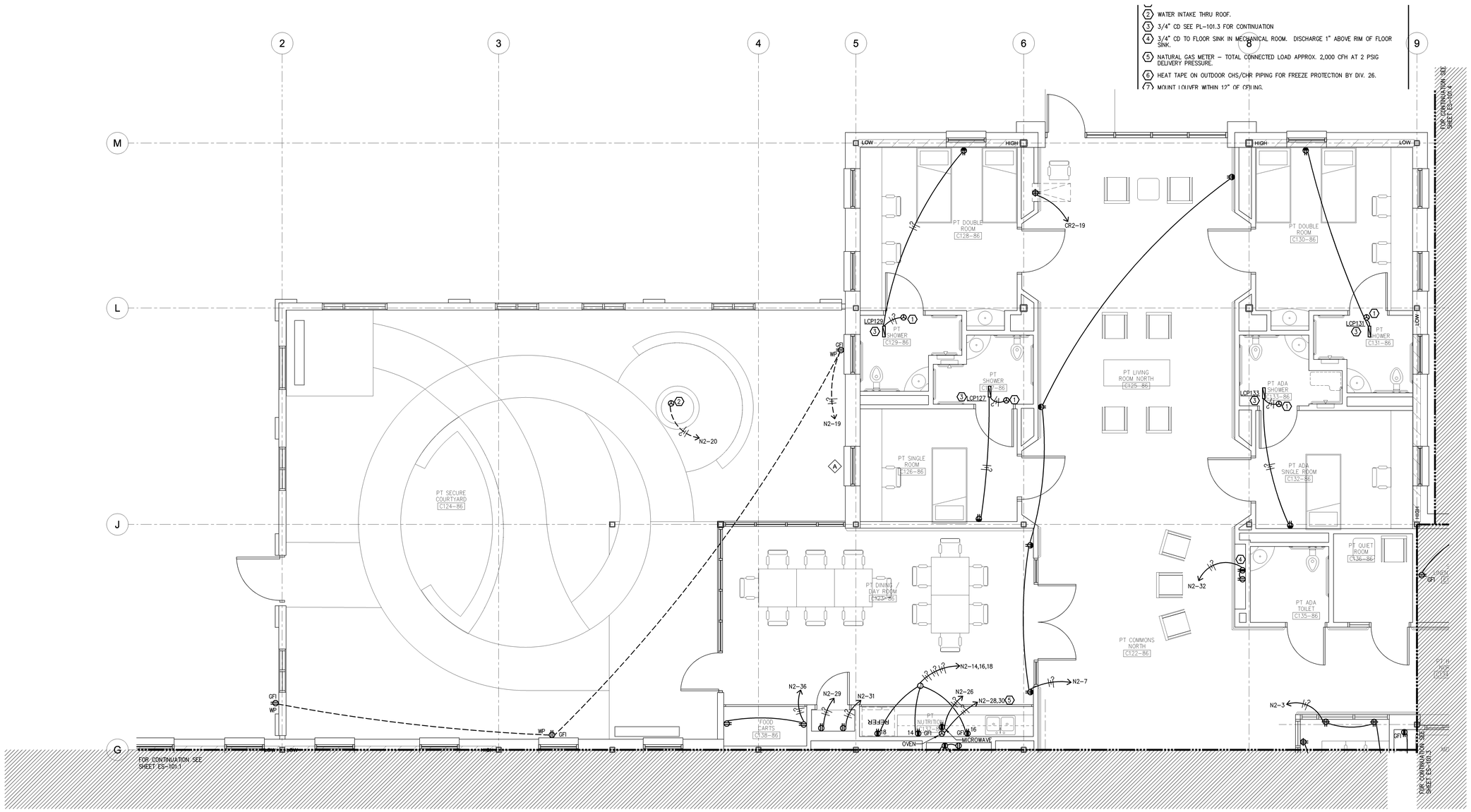

4 WATER INTAKE THRU ROOF.

3 3/4" CD SEE PL-101.3 FOR CONTINUATION

4 3/4" CD TO FLOOR SINK IN MECHANICAL ROOM. DISCHARGE 1" ABOVE RIM OF FLOOR SINK.

5 NATURAL GAS METER – TOTAL CONNECTED LOAD APPROX. 2,000 CFH AT 2 PSIG DELIVERY PRESSURE.

6 HEAT TAPE ON OUTDOOR CHS/CHR PIPING FOR FREEZE PROTECTION BY DIV. 26.

7 MOUNT LOUVER WITHIN 12" OF CEILING.

FLOOR PLAN NOTES:

1 SOLENOID VALVE ELECTRICAL CONNECTION. REFER TO PLUMBING DRAWINGS FOR EXACT LOCATION.

2 POWER CONNECTION TO WATER FEATURE. REFER TO LANDSCAPE PLANS.

3 LCP FOR ON/OFF CONTROL OF ROOM OUTLET, LIGHTS AND SOLENOID. SEE LIGHTING PLANS FOR LIGHTING CONTROL OF ROOM AND BRANCH CIRCUIT INFORMATION. SEE 8/ES-105 FOR CIRCUITING.

4 FLAT PANEL OUTLET. ELECTRICAL TO PROVIDE BRANCH CIRCUIT AND RECEPTACLE AT PANEL'S OUTLET BOX.

5 PROVIDE (2) #8 THWN, (1) #10 GND IN 1" CONDUIT.

1 FLOOR PLAN NORTH WING - POWER

SCALE: 1/4"=1'-0"

Revisions:	Date

CONSULTANTS:

BALZHISER & HUBBARD ENGINEERS
MECHANICAL • ELECTRICAL • CIVIL • SURVEYORS
100 WEST 13TH AVENUE EUGENE, OR 97401
P: 541-686-8678
F: 541-343-3302
2100-031-10es-101.1_4.dwg

REGISTERED PROFESSIONAL ENGINEER 50476 OREGON JULY 21, 1989 KEVIN M. WARE
DIGITAL SIGNATURE
EXPIRES 6/30/12

ARCHITECT/ENGINEERS:

Tina Ely architect
2915 Wingate Street / Eugene, OR 97408
541.521.2477 / Tina.Ely@comcast.net

Drawing Title	FLOOR PLAN NORTH WING- POWER
Approved: Project Director	
Project Title	SEISMIC REPLACEMENT BLDG 2 PHASE 1 MINOR ACUTE PSYCHIATRIC WARD
Location	ROSEBURG, OREGON
Date	30 APR 2012
Checked	KMW
Drawn	JSG
VA Project Number	653-322
Building Number	086
Sheet Number	ES-101.2

Office of Construction and Facilities Management

Department of Veterans Affairs

VA FORM 08-6231

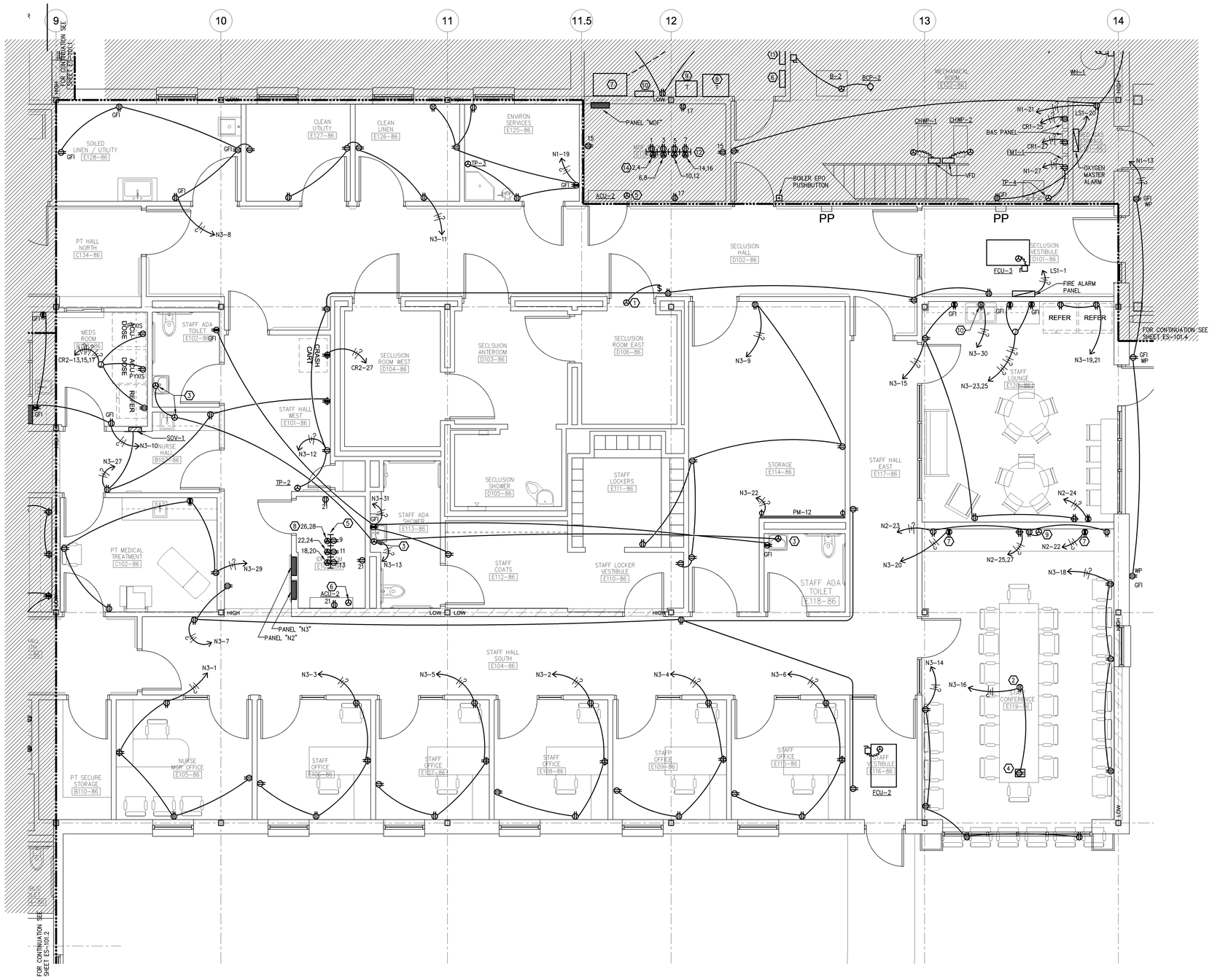

1 FLOOR PLAN EAST WING- POWER

SCALE: 1/4"=1'-0"

FLOOR PLAN NOTES:

1. WATER SOLENOID CONNECTION. CONNECT TO SAME CIRCUIT AS LIGHTS IN THIS ROOM. LABEL SWITCH "WATER SHUTOFF SWITCH".
2. CEILING MOUNTED OUTLET FOR PROJECTOR. REFER TO TA-103 FOR EXACT LOCATION.
3. FAUCET SENSOR CONNECTION.
4. FLOOR BOX OUTLET. SEE TELECOM SHEET FOR FLOOR BOX TYPE.
5. REFER TO TA SHEETS FOR EXACT LOCATION OF OUTLETS. CONNECT ALL OUTLETS IN THIS ROOM TO PANEL "MDF".
6. ACU – INDOOR CONNECTION. SEE DETAILS FOR CONNECTION TO OUTDOOR UNIT.
7. FLAT PANEL OUTLET. ELECTRICAL TO PROVIDE BRANCH CIRCUIT AND RECEPTACLE AT PANEL'S OUTLET BOX.
8. TYPICAL L6-30R RECEPTACLE. PROVIDE #10 AWG FOR BRANCH CIRCUIT TO RECEPTACLE.
9. PROJECTOR SCREEN CONNECTION. SEE "TA" DRAWINGS FOR LOW VOLTAGE CONTROL OF PROJECTOR.
10. HOT WATER/COLD WATER DISPENSER (HWCD-1).

Revisions: Date

CONSULTANTS:

BALZHISER & HUBBARD ENGINEERS
MECHANICAL ELECTRICAL CIVIL SURVEYORS
100 WEST 13TH AVENUE EUGENE, OR 97401
P: 541-686-8678
F: 541-343-5928
2100-031-10es-101.1_4.dwg

REGISTERED PROFESSIONAL ENGINEER 50476 OREGON JULY 21, 1992 KEVIN M. WARE
DIGITAL SIGNATURE
EXPIRES 6/30/12

ARCHITECT/ENGINEERS:

Tina Ely architect
2915 Wingate Street / Eugene, OR 97408
541.521.2477 / Tina.Ely@comcast.net

Drawing Title: FLOOR PLAN EAST WING- POWER

Approved: Project Director

Project Title: SEISMIC REPLACEMENT BLDG 2 PHASE 1 MINOR ACUTE PSYCHIATRIC WARD

Location: ROSEBURG, OREGON

Date: 30 APR 2012 | Checked: KMW | Drawn: JSG

VA Project Number: 653-322

Building Number: 086

Sheet Number: ES-101.3

Office of Construction and Facilities Management

Department of Veterans Affairs

VA FORM 08-6231

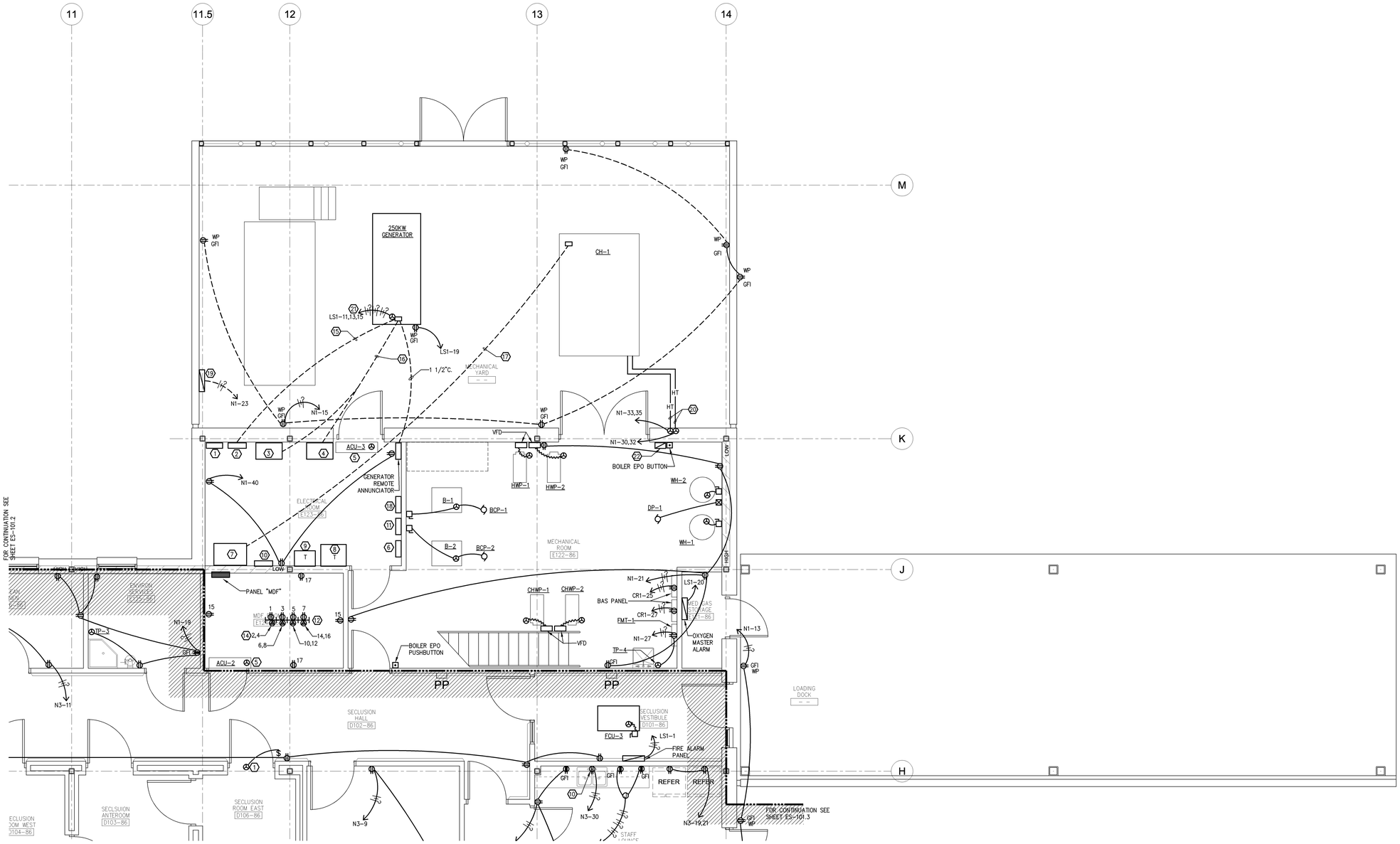

1 ENLARGED LOADING DOCK PLAN - POWER

SCALE: 1/4"=1'-0"

GENERAL NOTES:

1. REFER TO MECHANICAL EQUIPMENT CONNECTION SCHEDULE FOR CIRCUITING INFORMATION ON ALL MECHANICAL EQUIPMENT.

FLOOR PLAN NOTES:

1. PANEL "CR1".
2. MAIN EMERGENCY SWITCHBOARD.
3. ATS LIFE SAFETY.
4. ATS CRITICAL.
5. ACU – INDOOR CONNECTION. SEE DETAILS FOR CONNECTION TO OUTDOOR UNIT.
6. PANEL "N1".
7. MDA.
8. CRITICAL TRANSFORMER.
9. LIFE SAFETY TRANSFORMER.
10. LIFE SAFETY PANEL "LS-1".
11. LIGHTING CONTROL PANEL "LCP".
12. REFER TO TA SHEETS FOR EXACT LOCATION OF OUTLETS. CONNECT ALL OUTLETS IN THIS ROOM TO PANEL "MDF".
13. NOT USED.
14. TYPICAL L6-30R RECEPTACLE. PROVIDE #10 AWG FOR BRANCH CIRCUIT TO RECEPTACLE.
15. GENERATOR FEEDER. SEE ONE LINE DIAGRAM.
16. PROVIDE (1) 1 1/2 INCH CONDUIT FOR ATS START/STOP CIRCUIT.
17. CHILLER FEEDER. SEE ONE LINE DIAGRAM.
18. LIGHTING CONTROL SYSTEM SERVER.
19. IRRIGATION CONTROLLER.
20. PROVIDE HEAT TRACE FOR OUTDOOR CHILLER PIPING. PROVIDE HEAT TRACE ON CHILLER BARREL. SEE SPECIFICATIONS FOR HEAT TRACE CONTROLS.
21. PROVIDE CIRCUITRY FOR BATTERY CHARGER, HEATER, AND JACKET HEATER IN 1 1/4" CONDUIT.
22. HEAT TRACE CONTROLLER.

Revisions:	Date

CONSULTANTS:

BALZHISER & HUBBARD ENGINEERS
MECHANICAL ELECTRICAL CIVIL SURVEYORS
100 WEST 13TH AVENUE EUGENE, OR 97401
T: 541.485.8425 F: 541.485.7698
2100-031-10es-101.1_4.dwg

REGISTERED PROFESSIONAL ENGINEER 50476 DIGITAL SIGNATURE OREGON JULY 21, 1989 KEVIN M. WARE EXPIRES 6/30/12

ARCHITECT/ENGINEERS:

Tina Ely architect
2915 Wingate Street / Eugene, OR 97408
541.521.2477 / TinaEly@comcast.net

Drawing Title	ENLARGED LOADING DOCK PLAN - POWER
Approved: Project Director	
Project Title	SEISMIC REPLACEMENT BLDG 2 PHASE 1 MINOR ACUTE PSYCHIATRIC WARD
Location	ROSEBURG, OREGON
Date	30 APR 2012
Checked	KMW
Drawn	JSG
VA Project Number	653-322
Building Number	086
Sheet Number	ES-101.4

Office of Construction and Facilities Management

Department of Veterans Affairs

VA FORM 08-6231

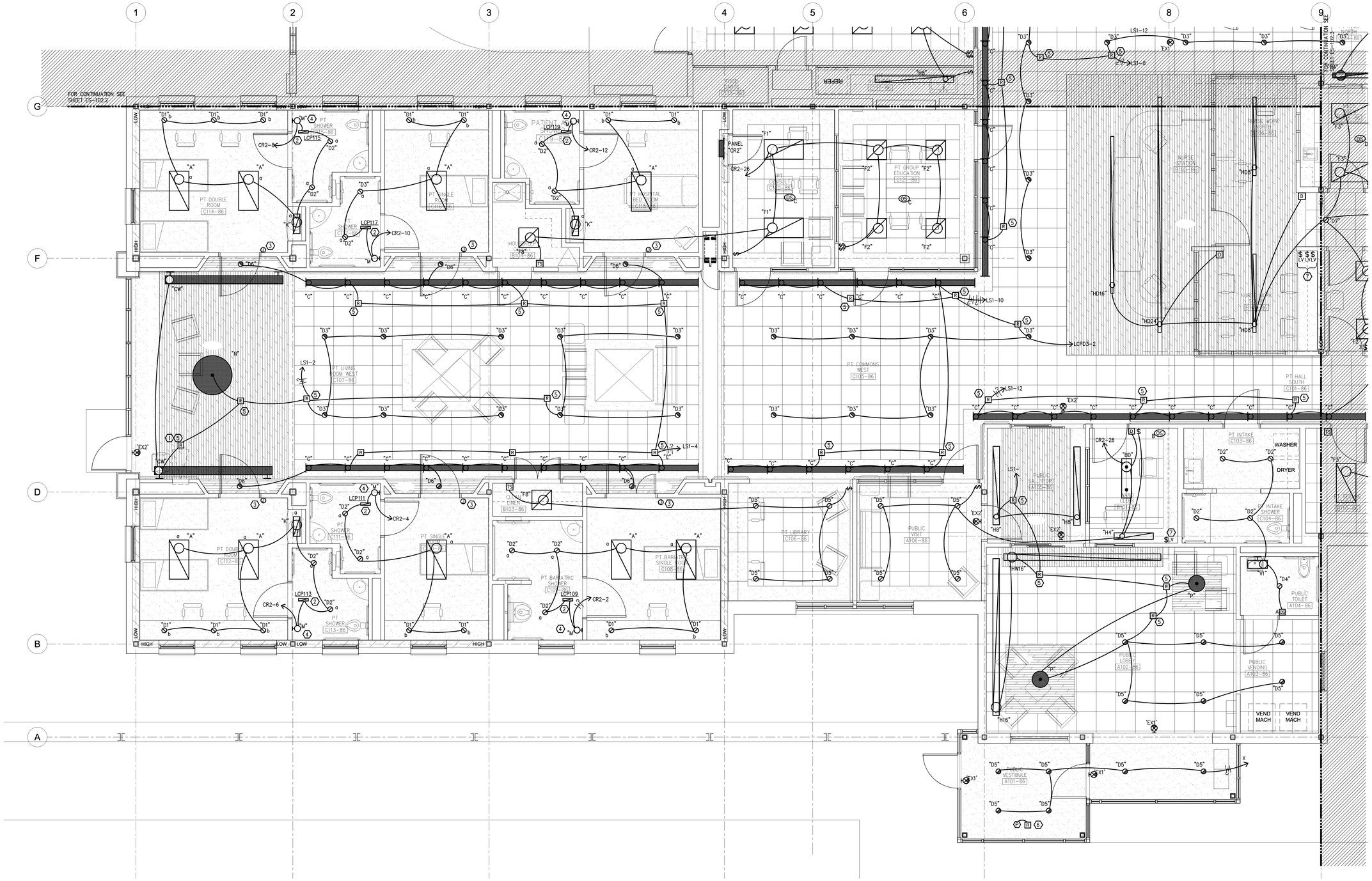

GENERAL NOTES:

1. ALL EXIT SIGNS SHOWN SHALL BE CIRCUITED TO PANEL "LS1", CIRCUIT LS1-22.

SHEET NOTES:

1. DEVICE TO BE INSTALLED ABOVE NEAREST ACCESSIBLE CEILING.
2. 4-RELAY LIGHTING PANEL LOCATED ABOVE CEILING. REFERENCE DETAIL 8/ES-105 FOR WIRING INFORMATION.
3. PROVIDE JUNCTION BOX WITH BLANK STAINLESS STEEL COVERPLATE. J-BOX FOR FUTURE LOW VOLTAGE SWITCH. REFERENCE DETAIL 8/ES-105 FOR WIRING INFORMATION.
4. PROVIDE UNSWITCHED FEED TO NIGHT LIGHT. REFERENCE DETAIL 8/ES-105 FOR WIRING INFORMATION.
5. PROVIDE ENCELIUM LUMINAIRE CONTROL MODULE WITH GREENBUS II COMMUNICATION CAPABILITIES. REFERENCE GREENBUS II RISER DIAGRAM FOR CONNECTION DETAILS.
6. LOCATE REMOTE DRIVERS FOR TYPE "S" FIXTURES ABOVE ACCESSIBLE CEILING.
7. PROVIDE ENCELIUM ZONE CONTROL WALL STATION WITH GREENBUS II COMMUNICATION CAPABILITIES. REFERENCE GREENBUS II RISER DIAGRAM FOR CONNECTION DETAILS.

1 FLOOR PLAN SOUTH/WEST WING - LIGHTING

SCALE: 1/4"=1'-0"

Revisions:	Date

CONSULTANTS:

BALZHISER & HUBBARD ENGINEERS
MECHANICAL • ELECTRICAL • CIVIL • SURVEYORS
100 WEST 13TH AVENUE EUGENE, OR 97401
P: 541.686.8678
F: 541.343.5921
2100-031-10es-102.1_4.dwg

REGISTERED PROFESSIONAL ENGINEER 50476 OREGON JULY 21, 1989 KEVIN M. WARE
DIGITAL SIGNATURE
EXPIRES 6/30/12

ARCHITECT/ENGINEERS:

Tina Ely architect
2915 Wingate Street / Eugene, OR 97408
541.521.2477 / TinaEly@comcast.net

Drawing Title	FLOOR PLAN SOUTH/WEST WING - LIGHTING
Approved: Project Director	
Project Title	SEISMIC REPLACEMENT BLDG 2 PHASE 1 MINOR ACUTE PSYCHIATRIC WARD
Location	ROSEBURG, OREGON
Date	30 APR 2012
Checked	KMW
Drawn	GCH
VA Project Number	653-322
Building Number	086
Sheet Number	ES-102.1

Office of Construction and Facilities Management

Department of Veterans Affairs

VA FORM 08-6231

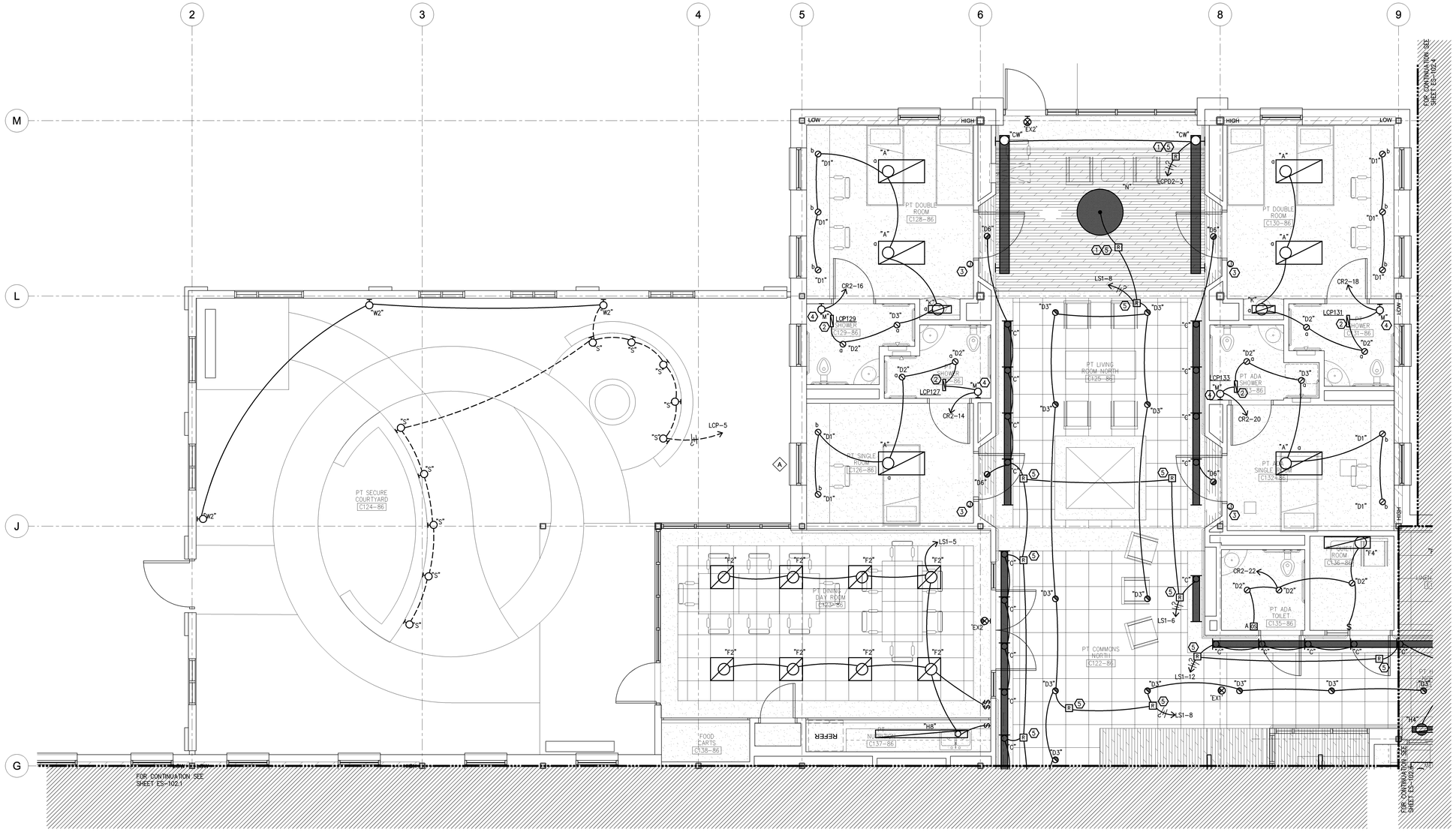

1 FLOOR PLAN NORTH WING - LIGHTING

SCALE: 1/4"=1'-0"

GENERAL NOTES:

1. ALL EXIT SIGNS SHOWN SHALL BE CIRCUITED TO PANEL "LS1", CIRCUIT LS1-22.

SHEET NOTES:

1. DEVICE TO BE INSTALLED ABOVE NEAREST ACCESSIBLE CEILING.
2. 4-RELAY LIGHTING PANEL LOCATED ABOVE CEILING. REFERENCE DETAIL 8/ES-105 FOR WIRING INFORMATION.
3. PROVIDE JUNCTION BOX WITH BLANK STAINLESS STEEL COVERPLATE. J-BOX FOR FUTURE LOW VOLTAGE SWITCH. REFERENCE DETAIL 8/ES-105 FOR WIRING INFORMATION.
4. PROVIDE UNSWITCHED FEED TO NIGHT LIGHT. REFERENCE DETAIL 8/ES-105 FOR WIRING INFORMATION.
5. PROVIDE ENCELIUM LUMINAIRE CONTROL MODULE WITH GREENBUS II COMMUNICATION CAPABILITIES. REFERENCE GREENBUS II RISER DIAGRAM FOR CONNECTION DETAILS.
6. LOCATE REMOTE DRIVERS FOR TYPE "S" FIXTURES ABOVE ACCESSIBLE CEILING.

Revisions:	Date

CONSULTANTS:

BALZHISER & HUBBARD ENGINEERS
MECHANICAL ELECTRICAL CIVIL SURVEYORS
100 WEST 13TH AVENUE EUGENE, OR 97401
P: 541-686-8678
F: 541-343-5928
2100-031-10es-102.1_4.dwg

REGISTERED PROFESSIONAL ENGINEER 50476 OREGON JULY 21, 1983 KEVIN M. WARE
DIGITAL SIGNATURE
EXPIRES 6/30/12

ARCHITECT/ENGINEERS:

Tina Ely architect
2915 Wingate Street / Eugene, OR 97408
541.521.2477 / Tina.Ely@comcast.net

Drawing Title	FLOOR PLAN NORTH WING - LIGHTING
Approved: Project Director	
Project Title	SEISMIC REPLACEMENT BLDG 2 PHASE 1 MINOR ACUTE PSYCHIATRIC WARD
Location	ROSEBURG, OREGON
Date	30 APR 2012
Checked	KMW
Drawn	GCH
VA Project Number	653-322
Building Number	086
Sheet Number	ES-102.2

Office of Construction and Facilities Management

Department of Veterans Affairs

VA FORM 08-6231

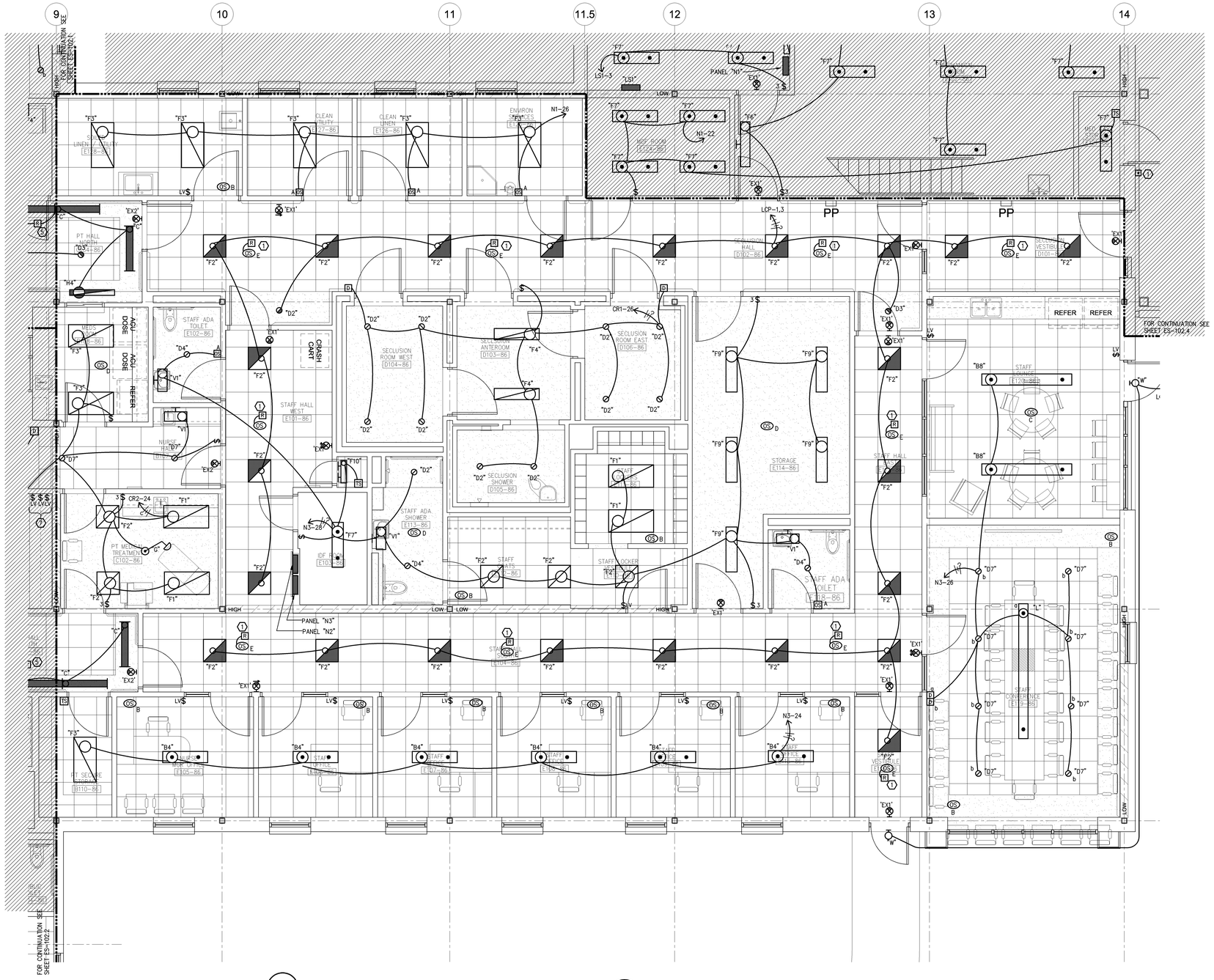

1 FLOOR PLAN EAST WING - LIGHTING

SCALE: 1/4"=1'-0"

GENERAL NOTES:

1. ALL EXIT SIGNS SHOWN SHALL BE CIRCUITED TO PANEL "LS1", CIRCUIT LS1-24.

SHEET NOTES:

1. PROVIDE ENCELIUM SENSOR INTERFACE MODULE WITH GREENBUS II COMMUNICATION CAPABILITIES. REFERENCE GREENBUS II RISER DIAGRAM FOR CONNECTION DETAILS.

Revisions:	Date

CONSULTANTS:

BALZHISER & HUBBARD ENGINEERS
MECHANICAL • ELECTRICAL • CIVIL • SURVEYING
100 WEST 13TH AVENUE EUGENE, OR 97401
P: 541-686-8678
F: 541-343-7303
2100-031-10es-102.1_4.dwg

REGISTERED PROFESSIONAL ENGINEER 50476 OREGON JULY 11, 1989 KEVIN M. WARE
DIGITAL SIGNATURE
EXPIRES 6/30/12

ARCHITECT/ENGINEERS:

Tina Ely architect
2915 Wingate Street / Eugene, OR 97408
541.521.2477 / TinaEly@comcast.net

Drawing Title: FLOOR PLAN EAST WING - LIGHTING

Approved: Project Director

Project Title: SEISMIC REPLACEMENT BLDG 2 PHASE 1 MINOR ACUTE PSYCHIATRIC WARD

Location: ROSEBURG, OREGON

Date: 30 APR 2012 | Checked: KMW | Drawn: GCH

VA Project Number: 653-322

Building Number: 086

Sheet Number: ES-102.3

Office of Construction and Facilities Management

Department of Veterans Affairs

VA FORM 08-6231

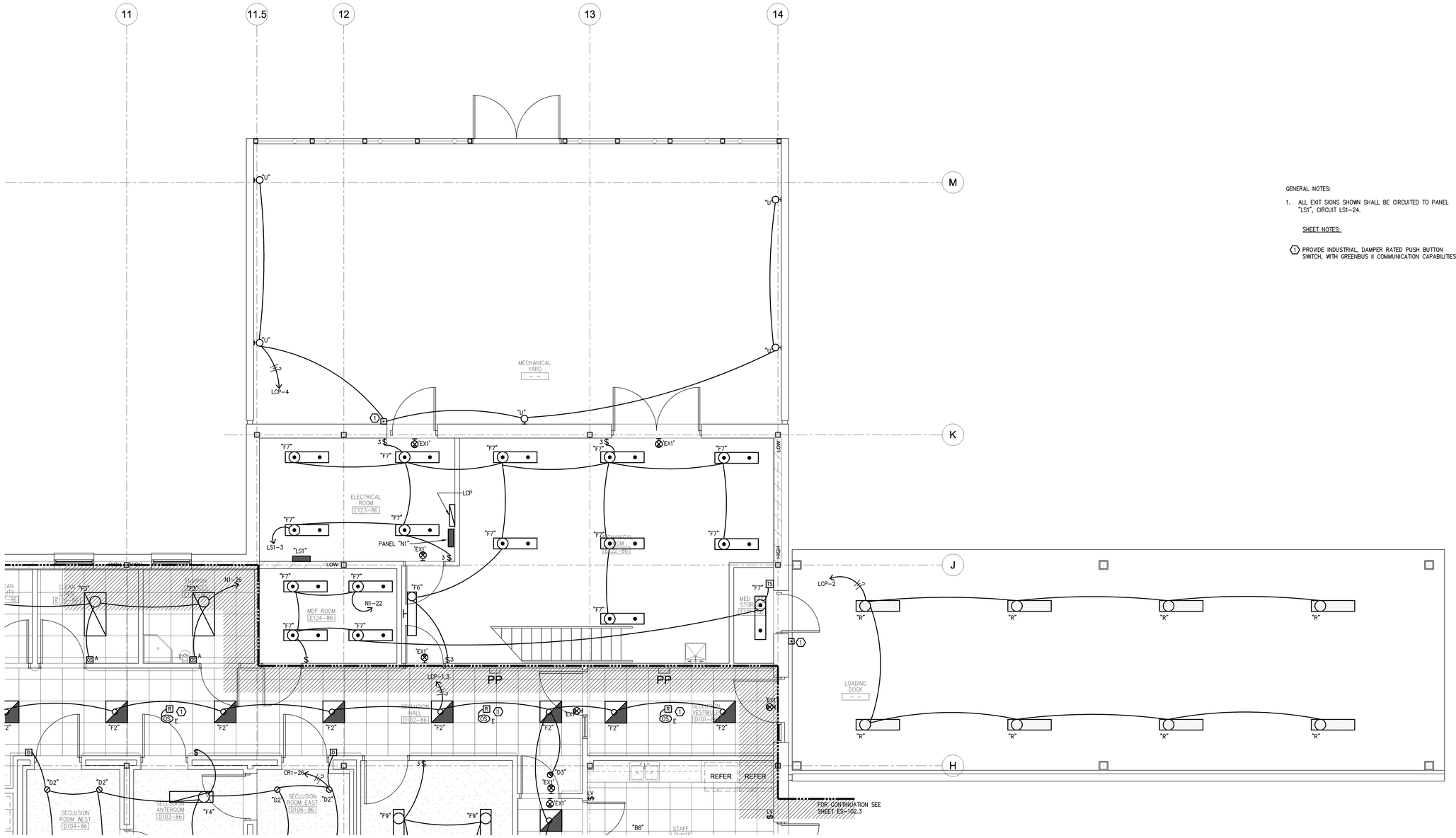

1 ENLARGED LOADING DOCK PLAN - LIGHTING

SCALE: 1/4"=1'-0"

GENERAL NOTES:

1. ALL EXIT SIGNS SHOWN SHALL BE CIRCUITED TO PANEL "LS1", CIRCUIT LS1-24.

SHEET NOTES:

1. PROVIDE INDUSTRIAL, DAMPER RATED PUSH BUTTON SWITCH, WITH GREENBUS II COMMUNICATION CAPABILITIES.

Revisions:	Date

CONSULTANTS:

BALZHISER & HUBBARD ENGINEERS
MECHANICAL • ELECTRICAL • CIVIL • SURVEYORS
100 WEST 13TH AVENUE EUGENE, OR 97401
P: 541-686-8678
F: 541-343-7302
2100-031-10es-102.1_4.dwg

REGISTERED PROFESSIONAL ENGINEER 50476 OREGON JULY 21, 1989 KEVIN M. WARE
DIGITAL SIGNATURE
EXPIRES 6/30/12

ARCHITECT/ENGINEERS:

Tina Ely architect
2915 Wingate Street / Eugene, OR 97408
541.521.2477 / Tina.Ely@comcast.net

Drawing Title	ENLARGED LOADING DOCK PLAN - LIGHTING
Approved: Project Director	
Project Title	SEISMIC REPLACEMENT BLDG 2 PHASE 1 MINOR ACUTE PSYCHIATRIC WARD
Location	ROSEBURG, OREGON
Date	30 APR 2012
Checked	KMW
Drawn	GCH
VA Project Number	653-322
Building Number	086
Sheet Number	ES-102.4

Office of Construction and Facilities Management

Department of Veterans Affairs

VA FORM 08-6231

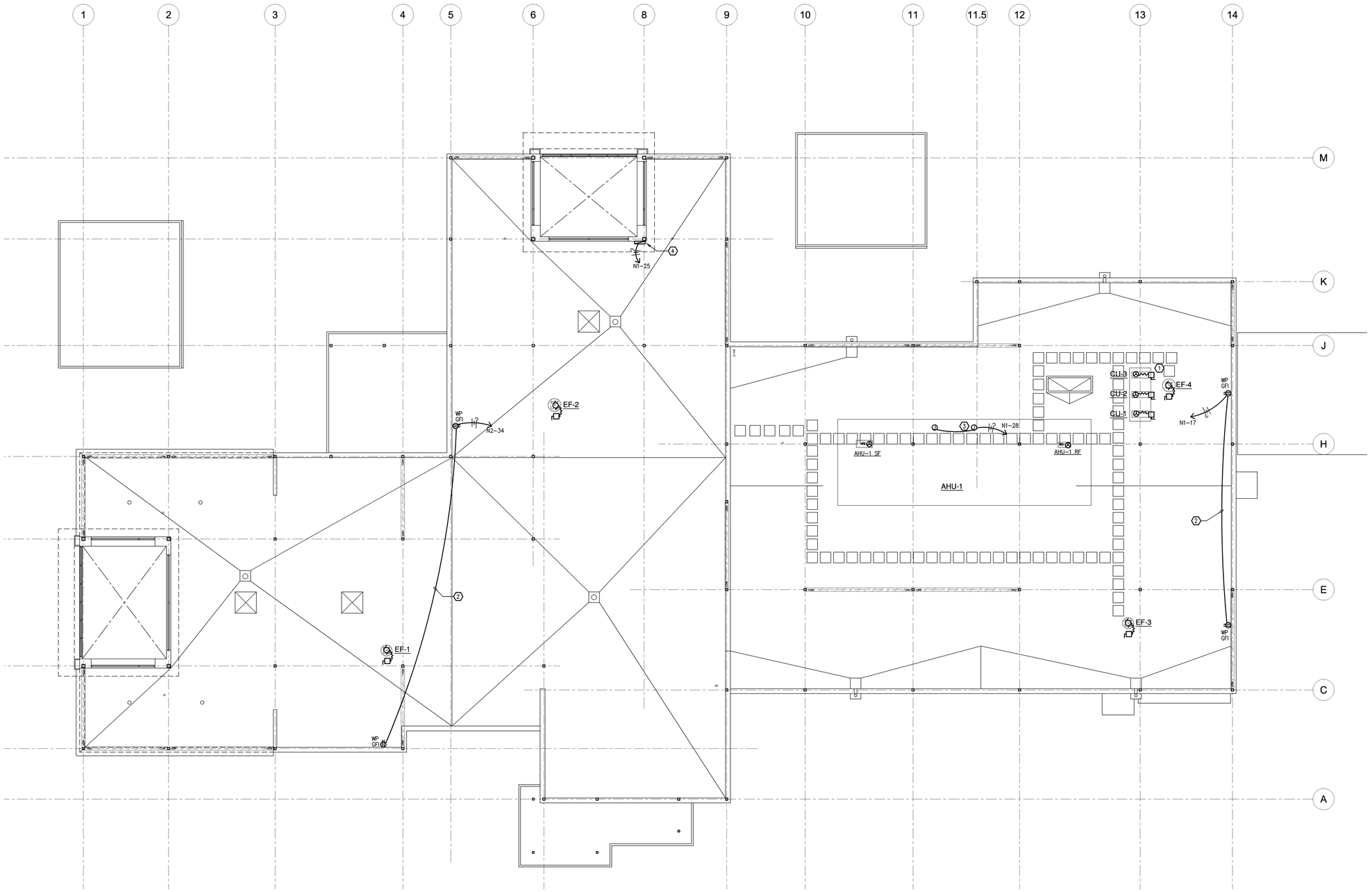

GENERAL NOTES:

1. REFER TO MECHANICAL EQUIPMENT CONNECTION SCHEDULE FOR CIRCUITING INFORMATION ON ALL MECHANICAL EQUIPMENT.

SHEET NOTES:

1. SEE DETAIL ON SHEET 2/ES-105 FOR CONNECTION DETAIL BETWEEN INSIDE AND OUTSIDE UNIT.
2. ROUTE CONDUIT IN CEILING SPACE BELOW.
3. POWER CONNECTION FOR LIGHTING AND OUTLETS OF AHU-1 SERVICE AREA. ELECTRICAL CONTRACTOR TO PROVIDE WIRING UP TO J-BOX.
4. IRRIGATION CONTROLLER.

ROOF PLAN - ELECTRICAL

SCALE: 1/8"=1'-0"

Revisions:	Date

CONSULTANTS:

BALZHISER & HUBBARD ENGINEERS
MECHANICAL ELECTRICAL CIVIL SURVEYORS
100 WEST 13TH AVENUE EUGENE, OR 97401
P: 541-686-8678
F: 541-343-5365
2100-031-10es-103.dwg

REGISTERED PROFESSIONAL ENGINEER 50476 OREGON JAN. 21, 1986 KEVIN M. WIRE
DIGITAL SIGNATURE
EXPIRES 6/30/12

ARCHITECT/ENGINEERS:

Tina Ely architect
2915 Wingate Street / Eugene, OR 97408
541.521.2477 / TinaEly@comcast.net

Drawing Title: ROOF PLAN - ELECTRICAL	Project Title: SEISMIC REPLACEMENT BLDG 2 PHASE 1 MINOR ACUTE PSYCHIATRIC WARD		VA Project Number: 653-322
			Building Number: 086
Approved: Project Director	Location: ROSEBURG, OREGON		Sheet Number: ES-103
	Date: 30 APR 2012	Checked: KMW	Drawn: JSG

Office of Construction and Facilities Management

Department of Veterans Affairs

VA FORM 08-6231

LUMINAIRE SCHEDULE

TYPE	DESCRIPTION	MANUFACTURER	LAMP	BALLAST	MOUNTING	FINISH	REMARKS
A	NOMINAL 24" X 48" RECESSED 2 LAMP FLUORESCENT LUMINAIRE WITH PERFORATED LAMP SHIELD, 16 GAUGE HOUSING, ONE PIECE 16 GAUGE DOOR FRAME, AND 0.187" CLEAR POLYCARBONATE LENS	KENALL MMAC24 SERIES	F32T8/830	ELECTRONIC PROGRAM START 0.71 BF	RECESSED - FLANGE	WHITE	TORX CENTER PIN REJECT FASTENERS
B4	NOMINAL 12" X 3.5" X 48" PENDANT MOUNTED 3 LAMP FLUORESCENT WITH 60/40 DISTRIBUTION AND MICRO-IMPREGNATED ACRYLIC SUBSTRATE LENS MATERIAL	LEDALITE 7306 SERIES	F32T8/830	ELECTRONIC PROGRAM START 0.88 BF	PENDANT - FULLY ADJUSTABLE AIRCRAFT CABLE	WHITE	
B8	NOMINAL 12" X 3.5" X 96"PENDANT MOUNTED 2 LAMP IN CROSS SECTION FLUORESCENT WITH 60/40 DISTRIBUTION AND MICRO-IMPREGNATED ACRYLIC SUBSTRATE LENS MATERIAL	LEDALITE 7306 SERIES	F32T8/830	ELECTRONIC PROGRAM START 0.88 BF	PENDANT - FULLY ADJUSTABLE AIRCRAFT CABLE	WHITE	
BD	NOMINAL 12" X 3.5" PENDANT MOUNTED 2 LAMP FLUORESCENT WITH 60/40 DISTRIBUTION AND MICRO-IMPREGNATED ACRYLIC SUBSTRATE LENS MATERIAL AND 0-10VDC DIMMING BALLAST	LEDALITE 7306 SERIES	F32T8/830	ELECTRONIC PROGRAM START DIMMING 0.88 BF	PENDANT - FULLY ADJUSTABLE AIRCRAFT CABLE	WHITE	
C	NOMINAL 2.5" X 5.5" X 48" SURFACE MOUNTED FLUORESCENT COVE LUMINAIRE WITH ASYMMETRIC SPECULAR REFLECTOR AND INTEGRAL REFLECTOR	ELLIPTIPAR 305 SERIES	F54TSHO	ELECTRONIC 0-10VDC DIMMING	SURFACE - COVE	N/A	
CW	NOMINAL 5" X 4" X 144" SURFACE MOUNTED ASYMMETRIC INDIRECT 1 LAMP FLUORESCENT WITH DECORATIVE FRONT SHIELD	ELLIPTIPAR 147 SERIES	F54TSHO	ELECTRONIC 0-10VDC DIMMING	SURFACE - WALL	WHITE	
D1	NOMINAL 6" RECESSED LED DOWNLIGHT WITH SELF FLANGING SEMI SPECULAR TRIM WITH TORX HEAD FASTENERS	GOTHAM VRALED SERIES	3000K 1000lm	INTEGRAL ELECTRONIC DRIVER	RECESSED	N/A	
D2	NOMINAL 6" RECESSED LED DOWNLIGHT WITH DIE CAST ALUMINUM TRIM WITH TEMPERED GLASS PRISMATIC LENS WITH TORX HEAD FASTENERS	GOTHAM VRALED SERIES	3000K 1000lm	INTEGRAL ELECTRONIC DIMMING DRIVER	RECESSED	N/A	
D3	NOMINAL 6" RECESSED LED DOWNLIGHT WITH SELF FLANGING SEMI SPECULAR TRIM	WILA 621 763 SERIES	3000K 2000lm REMOTE PHOSPHOR LIGHT ENGINE	INTEGRAL ELECTRONIC 0-10VDC DIMMING DRIVER	RECESSED	N/A	
D4	NOMINAL 4" RECESSED LED DOWNLIGHT WITH 60 DEG SEMI-SPECULAR OPTIC AND FROSTED FLOATING GLASS LENS	WILA 621 543 DFS SERIES	3000K 1000lm REMOTE PHOSPHOR LIGHT ENGINE	INTEGRAL ELECTRONIC DRIVER	RECESSED	N/A	
D5	NOMINAL 4" RECESSED LED DOWNLIGHT WITH 60 DEG SEMI-SPECULAR OPTIC AND FROSTED GLASS LENS	WILA 621 543 CFP SERIES	3000K 1000lm REMOTE PHOSPHOR LIGHT ENGINE	INTEGRAL ELECTRONIC DRIVER	RECESSED	N/A	
D6	NOMINAL 4" RECESSED LED 40 DEGREE DOWNLIGHT WITH LOW IRIDESCENT SEMI-SPECULAR SELF FLANGING ALZAK REFLECTOR	WILA 621 343 SERIES	3000K 400lm REMOTE PHOSPHOR LIGHT ENGINE	INTEGRAL ELECTRONIC DRIVER	RECESSED	N/A	
D7	NOMINAL 4" RECESSED LED 40 DEGREE DOWNLIGHT WITH LOW IRIDESCENT SEMI-SPECULAR SELF FLANGING ALZAK REFLECTOR	WILA 621 543 SERIES	3000K 1000lm REMOTE PHOSPHOR LIGHT ENGINE	INTEGRAL ELECTRONIC DRIVER	RECESSED	N/A	
EX1	SEMI-RECESSED LED EXIT SIGN WITH GREEN ON CLEAR LETTERS	LITHONIA LRP SERIES	GREEN LED	INTEGRAL	SEMI-RECESSED - AS NOTED ON LIGHTING PLANS	WHITE	CONSULT DRAWINGS FOR MOUNTING CONDITIONS PRIOR TO ORDERING
EX2	NOMINAL 12" X 16" RECESSED LED EXIT SIGN WITH DIE FORMED FRAME AND TAMPER RESISTANT FASTENERS	KENALL METSR SERIES	GREEN LED	INTEGRAL ELECTRONIC DRIVER	SEMI-RECESSED	WHITE	TORX CENTER PIN REJECT FASTENERS
F1	NOMINAL 24" X 48" RECESSED 2 LAMP FLUORESCENT LUMINAIRE WITH MICRO-IMPREGNATED ACRYLIC SUBSTRATE LENS MATERIAL	LEDALITE 9124 SERIES	F32T8/830	ELECTRONIC PROGRAM START 0.71 BF	RECESSED	WHITE	
F2	NOMINAL 24" X 48" RECESSED 3 LAMP FLUORESCENT LUMINAIRE WITH MICRO-IMPREGNATED ACRYLIC SUBSTRATE LENS MATERIAL AND ELECTRONIC BI-LEVEL BALLAST	LEDALITE 9122 SERIES	F17T8/830	ELECTRONIC PROGRAM START BI-LEVEL 0.87 - 0.34	RECESSED	WHITE	
F3	NOMINAL 24" X 48" RECESSED 2 LAMP FLUORESCENT WITH 0.156" ACRYLIC LENS	LITHONIA 2SP SERIES	F32T8/830	ELECTRONIC PROGRAM START 0.71 BF	RECESSED	WHITE	
F4	NOMINAL 9" X 48" DIE FORMED STEEL 1 LAMP FLUORESCENT WITH CONTINUOUS PIANO HINGE ON DOOR FRAME AND 0.156" A19 ACRYLIC LENS	NULITE 20 SERIES	F32T8/830	ELECTRONIC PROGRAM START 0.71 BF	RECESSED	WHITE	
F6	NOMINAL 4.5" X 4.5" X 48" SURFACE MOUNTED 2 LAMP FLUORESCENT WITH A12 PRISMATIC LENS	LITHONIA WC SERIES	F32T8/830	ELECTRONIC PROGRAM START 0.71 BF	SURFACE	WHITE	
F7	NOMINAL 6.5" X 13.5" X 48" PENDANT MOUNTED 2 LAMP FLUORESCENT INDUSTRIAL TURRET WITH 20% UPLIGHT	LITHONIA AF SERIES	F32T8/830	ELECTRONIC PROGRAM START 0.71 BF	PENDANT - CHAIN	WHITE	
F8	NOMINAL 24" X 24" RECESSED 3 LAMP FLUORESCENT WITH 0.156" ACRYLIC LENS	LITHONIA 2SP SERIES	F17T8/830	ELECTRONIC PROGRAM START 0.71 BF	RECESSED	WHITE	
F9	NOMINAL 48" SURFACE MOUNTED 2 LAMP FLUORESCENT WITH WRAP AROUND ACRYLIC LENS	LITHONIA LB SERIES	F32T8/830	ELECTRONIC PROGRAM START 0.71 BF	SURFACE	WHITE	
F10	NOMINAL 24" SURFACE MOUNTED 1 LAMP FLUORESCENT WITH PROTECTIVE WIRE GUARD	LITHONIA C SERIES	F32T8/830	ELECTRONIC PROGRAM START 0.71 BF	SURFACE	WHITE	
G	CEILING MOUNTED 50.000 LUX LED EXAM LIGHT WITH ARTICULATING ARM	STERIS HARMONY LED385 SERIES	5000K CRI > 90	INTEGRAL ELECTRONIC DRIVER	SURFACE - CEILING	STD	
H4	NOMINAL 3.5" RECESSED 1 LAMP IN CROSS SECTION FLUORESCENT WITH HIGH TRANSMISSION LAMP OBFUSCATING LENS	A LIGHT D5 ACCOLADE SERIES	F32T8/830	ELECTRONIC PROGRAM START 0.71 BF	RECESSED	STD	
H8	NOMINAL 3.5" RECESSED 1 LAMP IN CROSS SECTION FLUORESCENT WITH HIGH TRANSMISSION LAMP OBFUSCATING LENS	A LIGHT D5 ACCOLADE SERIES	F32T8/830	ELECTRONIC PROGRAM START 0.71 BF	RECESSED	STD	
H16	NOMINAL 3.5" RECESSED 1 LAMP IN CROSS SECTION FLUORESCENT WITH HIGH TRANSMISSION LAMP OBFUSCATING LENS	A LIGHT D5 ACCOLADE SERIES	F32T8/830	ELECTRONIC PROGRAM START 0.71 BF	RECESSED	STD	
HD(XX)	NOMINAL 3.5" RECESSED 1 LAMP IN CROSS SECTION FLUORESCENT WITH HIGH TRANSMISSION LAMP OBFUSCATING LENS AND ELECTRONIC 0-10VDC DIMMING BALLAST (XX) DENOTES TOTAL LUMINAIRE LENGTH	A LIGHT D5 ACCOLADE SERIES	F32T8/830	ELECTRONIC DIMMING BALLAST	RECESSED - COMPATIBLE WITH WOOD CEILING	STD	
HW16	NOMINAL 3.5" RECESSED 1 LAMP IN CROSS SECTION FLUORESCENT WITH HIGH TRANSMISSION LAMP OBFUSCATING LENS	A LIGHT D5 ACCOLADE SERIES	F32T8/830	ELECTRONIC PROGRAM START 0.71 BF	RECESSED - COMPATIBLE WITH WOOD CEILING	STD	
K	NOMINAL 9" X 24" RECESSED DIE FORMED STEEL 1 LAMP FLUORESCENT WITH CONTINUOUS PIANO HINGE ON DOOR FRAME AND 0.156" A19 ACRYLIC LENS	NULITE 20 SERIES	F17T8/830	ELECTRONIC PROGRAM START 0.71 BF	RECESSED	WHITE	TORX CENTER PIN REJECT FASTENERS
L	NOMINAL 7' 3/4 X 2" X 144" 2 LAMP IN CROSS SECTION LINEAR FLUORESCENT PENDANT WITH 0-10VDC ELECTRONIC DIMMING BALLAST	LEDALITE 4806 SERIES	F28TS/830	ELECTRONIC DIMMING BALLAST	PENDANT - FULLY ADJUSTABLE AIRCRAFT CABLE	STD	
M	NOMINAL 3" X 5" RECESSED AMBER LED STEP LIGHT WITH CLEAR POLYCARBONATE LENS AND INTERNAL LOUVER	KENALL MSLS SERIES	AMBER LED	ELECTRONIC DRIVER - ADJUSTABLE 100% - 40%	RECESSED	WHITE	TORX CENTER PIN REJECT FASTENERS
N	NOMINAL 31" X 34" 2 LAMP FLUORESCENT DECORATIVE PENDANT WITH WASHABLE DIFFUSER AND TOP AND BOTTOM ACRYLIC LENS	LUMETTA P53T3431 SERIES	F42TRT	ELECTRONIC DIMMING BALLAST	PENDANT	TBD ARCHITECT	
P	NOMINAL 20" DIAMETER DECORATIVE LED PENDANT WITH SANDBLASTED GLASS DIFFUSER	BETA CALCO QUINTUS SERIES	8.4W LED	ELECTRONIC DRIVER	PENDANT	TBD ARCHITECT	
Q	NOMINAL 2.5" X 4.5" MACHINED ALUMINUM STAKE MOUNTED LED FLOOD LIGHT WITH INTEGRAL TRANSFORMER, FIELD ADJUSTABLE OUTPUT AND 10' POWER CABLE	BK AR-LED-TR SERIES	8W/ED/4K WFL	INTEGRAL TRANSFORMER	GROUND MTD. C1686-07	TBD ARCHITECT	MAKE ALL CONNECTIONS WITH SUBMERSIBLE WIRE NUTS
R	NOMINAL 5" X4.6" X 50" SURFACE MOUNTED 1 LAMP FLUORESCENT WITH UV STABILIZED POLYCARBONATE LENS	KENALL N548 SERIES	F32T8/830	ELECTRONIC PROGRAM START 0.71 BF	SURFACE	WHITE	
S	NOMINAL 5" DIAMETER MACHINED ALUMINUM LED STEPLIGHT WITH INTEGRAL DRIVER, 30 DEG. ANGLED LOUVER AND TEMPERED GLASS LENS	BK SSL-LED SERIES	8WLED	INTEGRAL	RECESSED - CONCRETE POUR	TBD ARCHITECT	TORX CENTER PIN REJECT FASTENERS
T	NOMINAL 6" X 39" EXTRUDED ALUMINUM LED BOLLARD WITH DIE CAST HEAD	BEGA 8554LED SERIES	18W LED	INTEGRAL ELECTRONIC DRIVER	GROUND MTD - CONCRETE BASE	TBD ARCHITECT	
U	EXTERIOR 2 LAMP COMPACT FLUORESCENT WALL BRACKET	LITHONIA TWF1	42TRT	ELECTRONIC	SURFACE	STD	
V1	NOMINAL 24" SURFACE MOUNTED 1 LAMP FLUORESCENT VANITY SCONCE WITH WHITE ACRYLIC DIFFUSER	VISA CB 6504 SERIES	F17T8/830	ELECTRONIC	SURFACE	WHITE	
W	NOMINAL 11" X 4" X 3" SURFACE MOUNTED LED WALL BRACKET	BEGA 2380 LED		INTEGRAL ELECTRONIC DRIVER	SURFACE	TBD ARCHITECT	
W2	NOMINAL 6.5" X 4.75" SURFACE MOUNTED DIE CAST ALUMINUM LED WALL BRACKET WITH BOROSILICATE GLASS LENS	BEGA 3245LED SERIES	20W LED	INTEGRAL ELECTRONIC DRIVER	SURFACE	TBD ARCHITECT	
Y	NOMINAL4" X 4" X 52" SURFACE MOUNTED EXTRUDED ALUMINUM 1 LAMP FLUORESCENT WITH SATIN ACRYLIC LENS	AXIS WBS SERIES	F32T8	ELECTRONIC	SURFACE	TBD ARCHITECT	WET LOCATION LISTED
Z	NOMINAL 17" X 12" X 6" POLE MOUNTED LED TYPE III AREA LIGHT	KIM SAR SERIES	4000K	ELECTRONIC DRIVER	4" X 20' ROUND ALUMINUM POLE	MATCH CAMPUS STANDARD	

OCCUPANCY SENSOR SCHEDULE

TYPE	MODEL	TECHNOLOGY	MOUNTING	POWER PACK
A	PW-100	180° PASSIVE INFRARED	WALL SWITCH	NONE
B	DT-200	180° PASSIVE INFRARED, ULTRASONIC	CEILING/WALL	REQUIRED
C	DT-300	360° PASSIVE INFRARED, ULTRASONIC	CEILING	REQUIRED
D	UT-355	360° ULTRASONIC	CEILING	NONE
E	W-2000	360° ULTRASONIC	CEILING	REQUIRED

GENERAL NOTES:
1. BASIS OF DESIGN: WATTSTOPPER
2. REFER TO LIGHTING PLANS FOR OCCUPANCY SENSOR LOCATIONS.

Panel ID: LCPD1
Voltage: 120 Supply: LS1 - 7
Location: Electrical Room E123

RELAY	PANELBOARD	CIRCUIT	CONTROL	ROOM/ZONE	LOAD (VA)	NOTES
1	LS1	4	TC	C107	1279	
2	LS1	2	TC	C107	150	
3	LS1	2	TC	C107	372	
4	LS1	2	TC	C107	98	

KEY: TC = TIME CLOCK / S_{LV} = LOW VOLTAGE SWITCH / PC = PHOTOCELL

NOTES:
1.
2.
3.
4.

Panel ID: LCPD2
Voltage: 120 Supply: LS1 - 7
Location: Electrical Room E123

RELAY	PANELBOARD	CIRCUIT	CONTROL	ROOM/ZONE	LOAD (VA)	NOTES
1	LS1	6	TC	C122	1204	
2	LS1	8	TC	C122	165	
3	LS1	8	TC	C122	372	
4	LS1	8	TC	C122	98	

KEY: TC = TIME CLOCK / S_{LV} = LOW VOLTAGE SWITCH / PC = PHOTOCELL

NOTES:
1.
2.
3.
4.

Panel ID: LCPD3
Voltage: 120 Supply: LS1 - 7
Location: Electrical Room E123

RELAY	PANELBOARD	CIRCUIT	CONTROL	ROOM/ZONE	LOAD (VA)	NOTES
1	LS1	10	TC	C105	682	
2	LS1	10	TC	C105	105	
3	LS1	12	TC	C134	310	
4	LS1	12	TC	C101	620	

KEY: TC = TIME CLOCK / S_{LV} = LOW VOLTAGE SWITCH / PC = PHOTOCELL

NOTES:
1.
2.
3.
4.

LIGHTING CONTROL PANEL SCHEDULE

ID: LCP Location: Electrical Room E123
Voltage: 120 Supply Circuit: LS1 - 9 Normal Interruption Circuit: N1 - 24

Relay	Panelboard	Circuit	Control	Room / Number / Zone	Load (VA)	Notes	Relay	Panelboard	Circuit	Control	Room / Number / Zone	Load (VA)	Notes
EMERGENCY													
1			TC / OS	HALL & VESTIBULE	460		2			TC	LOADING DOCK	200	
3			TC / OS	HALL & VESTIBULE	460		4			TC	MECH. YARD	470	
5			TC	EXT/SECURE CT.	216	1,2,3	6			TC / PC	VEST A101	90	1,5
7							8						
9							10						
11							12						
NORMAL													
13						8	14						8
15						8	16						8

KEY: TC = TIME CLOCK / OS = OCCUPANY C SENSOR / S_{LV} = LOW VOLTAGE SWITCH / PC = PHOTOCELL

GENERAL NOTES:
1. UPON LOSS OF NORMAL POWER, ALL LIGHTS IDENTIFIED AS EMERGENCY SHALL AUTOMATICALLY TURN ON.

NOTES:
1. LIGHTS ON AT 6:30AM, OFF AT 6:30PM, VERIFY SCHEDULE WITH OWNER.
2. RELAY OPERATED BY LOCAL CONTROL STATIONS AFTER OCCUPIED HOURS.
3. SWEEP LIGHTS OFF AT 2 HOUR INTERVALS AFTER SCHEDULED OCCUPIED HOURS.
4. OPERATION OF ANY LOCAL CONTROL STATION AFTER HOURS SHALL TURN RELAY ON.
5. RELAY OPERATED BY OCCUPANCY SENSOR AFTER NORMALLY OCCUPIED HOURS.
6. RELAY OPERATED BY OCCUPANCY SENSOR DURING NORMALLY OCCUPIED HOURS.
7. LIGHTS ON AT DUSK, OFF AT DAWN.
8. SPARE RELAY

Revisions: Date

CONSULTANTS:

BALZHISER & HUBBARD ENGINEERS
MECHANICAL • ELECTRICAL • CIVIL • SURVEYORS
100 WEST 13TH AVENUE EUGENE, OR 97401 P: 541-686-8678 F: 541-342-2302
2100–031–10es–104.1.dwg

REGISTERED PROFESSIONAL ENGINEER 50476 OREGON JULY 21, 1989 KEVIN M. WARE
DIGITAL SIGNATURE
EXPIRES 6/30/12

ARCHITECT/ENGINEERS:

Tina Ely architect
2919 Wingate Street / Eugene, OR 97408
541.521.2477 / Tina.Ely@comcast.net

Drawing Title: LUMINAIRE, OCCUPANCY SENSOR, AND LIGHTING CONTROL SCHEDULES

Approved: Project Director

Project Title: SEISMIC REPLACEMENT BLDG 2 PHASE 1 MINOR ACUTE PSYCHIATRIC WARD

Location: ROSEBURG, OREGON

Date: 30 APR 2012 | Checked: KMW | Drawn: GCH

VA Project Number: 653-322
Building Number: 086
Sheet Number: ES-104.1

Office of Construction and Facilities Management
Department of Veterans Affairs

VA FORM 08-6231

PANEL SCHEDULE

PANEL: PANEL N1
VOLTS: 120/208
LOCATION: ELECTRICAL ROOM
MOUNTING: SURFACE
NOTES:

TYPE: NEMA1 AMPS: 225
PHASE: 3 WIRE: 4
MAIN: MLO

DATE: April 27, 2012
PROJECT:

LOAD CLASS	Conn. VA	Demand Factor	Demand Load VA
LIGHTING	470	125%	588
OUTLETS	1080	*	1080
MOTOR LOADS	17824	**	20002
RESISTANCE LOADS	0	100%	0
SUBFEED	0	100%	0
MISC. LOADS	23450	100%	23450
SUBFEED BREAKER	0		0

	Connected	Demand
TOTAL VOLT-AMPS	42,824	45,120
MAXIMUM PHASE AMPS	125.0	131.6

BREAKER A	BREAKER P	DESCRIPTION	WATTS	CIR. NO.	PHASE	CIR. NO.	WATTS	DESCRIPTION	BREAKER P	BREAKER A
40	3	CHWP-1	2904	1	A	2	3600	CU-1	2	30
			2904	3	B	4	3600			
			2904	5	C	6	3600	CU-2	2	30
40	3	CHWP-2	2904	7	A	8	3600			
			2904	9	B	10	3600	CU-3	2	30
			2904	11	C	12	3600			
20	1	RECEPT - EXTERIOR	360	13	A	14	400	WH-1	1	15
20	1	EXTERIOR OUTLET	360	15	B	16	400	WH-2	1	15
20	1	ROOF OUTLETS	360	17	C	18	400	DP-1	1	15
20	1	ENVIRO SERVICES OUTLETS		19	A	20		SPARE	1	20
20	1	MECH ROOM OUTLETS		21	B	22	235	LTG: RM. E121 & E124	1	20
20	1	IRRIGATION CONTROLLER - MECH YARD		23	C	24	50	LCP NORMAL INTERRUPT	1	20
20	1	IRRIGATION CONTROLLER - ROOF		25	A	26	235	LTG: RM. E125-E128	1	20
20	1	FMT-1		27	B	28	1000	AHU-1 LIGHTING CIRCUIT, OUTLET	1	20
20	1	BFP - HOT BOX		29	C	30		SPARE	1	20
20	1	BFP - HOT BOX		31	A	32		SPARE	1	20
20	1	SPARE		33	B	34		SPARE	1	20
20	1	SPARE		35	C	36		SPARE	1	20
20	1	SPARE		37	A	38		SPARE	1	20
20	1	SPARE		39	B	40		SPARE	1	20
20	1	SPARE		41	C	42		SPARE	1	20

PHASE TOTALS	A	B	C
Connected VA	14003	15003	13818
Demand VA	14788	15788	14544
Connected Amps	116.7	125.0	115.2
Demand Amps	123.2	131.6	121.2

* 10kVA at 100%, remainder at 50%
** 100% plus 25% of the largest Motor

PANEL SCHEDULE

PANEL: PANEL N2
VOLTS: 120/208
LOCATION: HALLWAY
MOUNTING: FLUSH
NOTES:

TYPE: NEMA 1 AMPS: 150
PHASE: 3 WIRE: 4
MAIN: MLO

DATE: April 27, 2012
PROJECT:

LOAD CLASS	Conn. VA	Demand Factor	Demand Load VA
LIGHTING	0	125%	0
OUTLETS	9700	*	9700
MOTOR LOADS	0	**	0
RESISTANCE LOADS	5800	100%	5800
SUBFEED	0	100%	0
MISC. LOADS	15800	100%	15800
SUBFEED BREAKER	0		0

	Connected	Demand
TOTAL VOLT-AMPS	31,300	31,300
MAXIMUM PHASE AMPS	89.2	89.2

BREAKER A	BREAKER P	DESCRIPTION	WATTS	CIR. NO.	PHASE	CIR. NO.	WATTS	DESCRIPTION	BREAKER P	BREAKER A
20	1	NURSE WORKSTATION OUTLETS	720	1	A	2	600	WATER FEATURE	1	20
20	1	NURSE WORKSTATION OUTLETS	720	3	B	4	720	PATIENT CONSULTATION OUTLETS	1	20
20	1	NURSE WORKSTATION OUTLETS	720	5	C	6	540	PATIENT GROUP EDUCATION OUTLET	1	20
20	1	HALLWAY OUTLETS	720	7	A	8	900	HALL OUTLETS	1	20
20	1	SPARE		9	B	10	900	VENDING MACHINE	1	20
20	1	OUTLETS	540	11	C	12	900	VENDING MACHINE	1	20
50	2	DRYER	2500	13	A	14	800	DINING	1	20
			2500	15	B	16	800	DINING	1	20
20	1	WASHER	1000	17	C	18	1000	REF	1	20
20	1	OUTLETS	540	19	A	20	600	WATER FEATURE	1	20
20	1	SPARE		21	B	22	600	FLAT PANEL TV	1	20
20	1	RECEPT - CONFERENCE	540	23	C	24	600	FLAT PANEL TV	1	20
20	1	AV RACK	600	25	A	26	1000	MICROWAVE	1	20
20	1	AV RACK	600	27	B	28	2900	OVEN	2	40
20	1	AV RACK	600	29	C	30	2900			
20	1	AV RACK	600	31	A	32	600	FLAT PANEL TV	1	20
20	1	FLAT PANEL TV	600	33	B	34	360	ROOF OUTLET	1	20
20	1	PT LIBRARY	720	35	C	36	360	OULTET FOOD CART	1	20
20	1	SPARE		37	A	38		SPARE	1	20
20	1	SPARE		39	B	40		SPARE	1	20
20	1	SPARE		41	C	42		SPARE	1	20

PHASE TOTALS	A	B	C
Connected VA	10180	10700	10420
Demand VA	10180	10700	10420
Connected Amps	84.8	89.2	86.8
Demand Amps	84.8	89.2	86.8

* 10kVA at 100%, remainder at 50%
** 100% plus 25% of the largest Motor

PANEL SCHEDULE

PANEL: PANEL N3
VOLTS: 120/208
LOCATION: HALLWAY
MOUNTING: FLUSH
NOTES:

TYPE: NEMA 1 AMPS: 150
PHASE: 3 WIRE: 4
MAIN: MLO

DATE: April 27, 2012
PROJECT:

LOAD CLASS	Conn. VA	Demand Factor	Demand Load VA
LIGHTING	1814	125%	2268
OUTLETS	14860	*	12430
MOTOR LOADS	0	**	0
RESISTANCE LOADS	0	100%	0
SUBFEED	0	100%	0
MISC. LOADS	3100	100%	3100
SUBFEED BREAKER	0		0

	Connected	Demand
TOTAL VOLT-AMPS	19,774	17,798
MAXIMUM PHASE AMPS	56.9	51.5

BREAKER A	BREAKER P	DESCRIPTION	WATTS	CIR. NO.	PHASE	CIR. NO.	WATTS	DESCRIPTION	BREAKER P	BREAKER A
20	1	MANAGER OFFICE RECEPTACLES	720	1	A	2	720	STAFF OFFICE RECEPTACLES	1	20
20	1	STAFF OFFICE RECEPTACLES	720	3	B	4	720	STAFF OFFICE RECEPTACLES	1	20
20	1	STAFF OFFICE RECEPTACLES	720	5	C	6	720	STAFF OFFICE RECEPTACLES	1	20
20	1	HALL RECEPTACLES	720	7	A	8	720	SOILED LINEN UTILITY	1	20
20	1	STORAGE RECEPTACLES	900	9	B	10	540	MEDS ROOM RECEPTACLES	1	20
20	1	CLEAN UTILITY, LINEN	500	11	C	12	900	HALL RECEPTACLES	1	20
20	1	FAUCET SENSORS	800	13	A	14	720	STAFF CONFERENCE RECEPTACLES	1	20
20	1	LOUNGE RECETACLE	900	15	B	16	540	STAFF CONFERENCE RECEPTACLES	1	20
20	1	LOUNGE RECETACLE	360	17	C	18	900	STAFF CONFERENCE RECEPTACLES	1	20
20	1	LOUNGE RECETACLE	180	19	A	20	600	FLAT PANEL	1	20
20	1	LOUNGE REF	600	21	B	22	1000	PLUG MOLD - STORAGE	1	20
20	1	LOUNGE REF	600	23	C	24	726	LTG: RM C103,C104,A104, STAFF OFFICES	1	20
20	1	LOUNGE RECETACLE	800	25	A	26	540	LTG: RM E119 & E120	1	20
20	1	NURSE HALL OUTLETS	360	27	B	28	548	LTG: RM E102,E103, E110-E114, E118	1	20
20	1	PT-MEDICAL TREATMENT OUTLET		29	C	30	1000	COLD/HOT WATER DISPENSER	1	20
20	1	SPARE		31	A	32		SPARE	1	20
20	1	SPARE		33	B	34		SPARE	1	20
20	1	SPARE		35	C	36		SPARE	1	20
20	1	SPARE		37	A	38		SPARE	1	20
20	1	SPARE		39	B	40		SPARE	1	20
20	1	SPARE		41	C	42		SPARE	1	20

PHASE TOTALS	A	B	C
Connected VA	6520	6828	6426
Demand VA	5677	6183	5937
Connected Amps	54.3	56.9	53.6
Demand Amps	47.3	51.5	49.5

* 10kVA at 100%, remainder at 50%
** 100% plus 25% of the largest Motor

PANEL SCHEDULE

PANEL: PANEL LS1
VOLTS: 120/208
LOCATION: ELECTRICAL ROOM
MOUNTING: SURFACE
NOTES:

TYPE: NEMA1 AMPS: 150
PHASE: 3 WIRE: 4
MAIN: 100

DATE: April 27, 2012
PROJECT:

LOAD CLASS	Conn. VA	Demand Factor	Demand Load VA
LIGHTING	8517	125%	10646
OUTLETS	180	*	180
MOTOR LOADS	0	**	0
RESISTANCE LOADS	0	100%	0
SUBFEED	0	100%	0
MISC. LOADS	5975	100%	5975
SUBFEED BREAKER	0		0

	Connected	Demand
TOTAL VOLT-AMPS	14,672	16,801
MAXIMUM PHASE AMPS	44.9	50.2

BREAKER A	BREAKER P	DESCRIPTION	WATTS	CIR. NO.	PHASE	CIR. NO.	WATTS	DESCRIPTION	BREAKER P	BREAKER A
20	1	FIRE ALARM PANEL	1000	1	A	2	620	LCPD1, RELAYS: 2,3,4	1	20
20	1	LTG: RM. E122 & E123	564	3	B	4	1279	LCPD1, RELAY: 1	1	20
20	1	LTG: RM. C123 & C137	370	5	C	6	1204	LCPD2, RELAY: 1	1	20
20	1	PWR SUPPLY: LCPD1, LCPD2 & LCPD3	100	7	A	8	635	LCPD2, RELAYS: 2,3,4	1	20
20	1	PWR SUPPLY: LCP	75	9	B	10	787	LCPD3, RELAYS: 1,2	1	20
20	1	GENERATOR BATTERY CHARGER	1000	11	C	12	930	LCPD3, RELAYS: 3,4	1	20
20	1	GENRATOR BATTERY WARMER	1000	13	A	14	1258	LCP, RELAYS 1 & 3	1	20
20	1	GENERATOR HEATER CIRCUIT	1000	15	B	16	670	LCP, RELAYS 2 & 4	1	20
20	1	WON-DOOR	600	17	C	18	600	MED GAS ALARM PANEL	1	20
20	1	GENERATOR SERVICE OUTLET	180	19	A	20	600	OXYGEN MASTER ALARM PANEL	1	20
20	1	SPARE		21	B	22	100	EXIT SIGNS	1	20
20	1	SPARE		23	C	24	100	EXIT SIGNS	1	20
20	1	SPARE		25	A	26		SPARE	1	20
20	1	SPARE		27	B	28		SPARE	1	20
20	1	SPARE		29	C	30		SPARE	1	20
20	1	SPARE		31	A	32		SPARE	1	20
20	1	SPARE		33	B	34		SPARE	1	20
20	1	SPARE		35	C	36		SPARE	1	20
20	1	SPARE		37	A	38		SPARE	1	20
20	1	SPARE		39	B	40		SPARE	1	20
20	1	SPARE		41	C	42		SPARE	1	20

PHASE TOTALS	A	B	C
Connected VA	5393	4475	4804
Demand VA	6021	5325	5455
Connected Amps	44.9	37.3	40.0
Demand Amps	50.2	44.4	45.5

* 10kVA at 100%, remainder at 50%
** 100% plus 25% of the largest Motor

PANEL SCHEDULE

PANEL: PANEL CR1
VOLTS: 120/208
LOCATION: ELECTRICAL ROOM
MOUNTING: SURFACE
NOTES:

TYPE: NEMA 1 AMPS: 300
PHASE: 3 WIRE: 4
MAIN: 300

DATE: April 27, 2012
PROJECT:

LOAD CLASS	Conn. VA	Demand Factor	Demand Load VA
LIGHTING	430	125%	538
OUTLETS	0	*	0
MOTOR LOADS	51096	**	59016
RESISTANCE LOADS	1008	100%	1008
SUBFEED	14747	100%	14747
MISC. LOADS	2000	100%	2000
SUBFEED BREAKER	0		0

	Connected	Demand
TOTAL VOLT-AMPS	69,281	77,309
MAXIMUM PHASE AMPS	199.6	222.5

BREAKER A	BREAKER P	DESCRIPTION	WATTS	CIR. NO.	PHASE	CIR. NO.	WATTS	DESCRIPTION	BREAKER P	BREAKER A
20	3	HWP-1	900	1	A	2	420	BCP-1	3	15
			900	3	B	4	420			
			900	5	C	6	420			
20	3	HWP-2	900	7	A	8	420	BCP-2	3	15
			900	9	B	10	420			
			900	11	C	12	420			
15	1	B1	504	13	A	14	10560	AHU-SUPPLY	3	150
15	1	B2	504	15	B	16	10560			
15	1	EF-1	696	17	C	18	10560			
15	1	EF-2	696	19	A	20	2904	AHU-RETURN	3	40
15	1	EF-3	696	21	B	22	2904			
15	1	EF-4	696	23	C	24	2904			
20	1	BAS CONTROL PANEL	1000	25	A	26	430	LTG: D103-D106	1	20
20	1	BAS CONTROL PANEL	1000	27	B	28		SPARE	1	20
20	1	SPARE		29	C	30		SPARE	1	20
20	1	SPARE		31	A	32		SPARE	1	20
20	1	SPARE		33	B	34		SPARE	1	20
20	1	SPARE		35	C	36		SPARE	1	20
125	3	PANEL CR-2	5220	37	A	38		SPARE	1	20
			4599	39	B	40		SPARE	1	20
			4928	41	C	42		SPARE	1	20

PHASE TOTALS	A	B	C
Connected VA	23954	22903	22424
Demand VA	26702	25543	25064
Connected Amps	199.6	190.9	186.9
Demand Amps	222.5	212.9	208.9

* 10kVA at 100%, remainder at 50%
** 100% plus 25% of the largest Motor

PANEL SCHEDULE

PANEL: PANEL CR2
VOLTS: 120/208
LOCATION: PT CONSULTANT CLOSET
MOUNTING: FLUSH
NOTES:

TYPE: NEMA 1 AMPS: 125
PHASE: 3 WIRE: 4
MAIN: MLO

DATE: April 27, 2012
PROJECT:

LOAD CLASS	Conn. VA	Demand Factor	Demand Load VA
LIGHTING	5467	125%	6834
OUTLETS	6480	*	6480
MOTOR LOADS	0	**	0
RESISTANCE LOADS	0	100%	0
SUBFEED	0	100%	0
MISC. LOADS	2800	100%	2800
SUBFEED BREAKER	0		0

	Connected	Demand
TOTAL VOLT-AMPS	14,747	16,114
MAXIMUM PHASE AMPS	43.5	47.0

BREAKER A	BREAKER P	DESCRIPTION	WATTS	CIR. NO.	PHASE	CIR. NO.	WATTS	DESCRIPTION	BREAKER P	BREAKER A
20	1	NURSE WORKSTATION OUTLETS	720	1	A	2	400	LCP109, SUPPLY & ALL RELAYS	1	20
20	1	NURSE WORKSTATION OUTLETS	720	3	B	4	400	LCP111, SUPPLY & ALL RELAYS	1	20
20	1	NURSE WORKSTATION OUTLETS	720	5	C	6	500	LCP113, SUPPLY & ALL RELAYS	1	20
20	1	WARD CLERK OUTLETS	720	7	A	8	500	LCP115, SUPPLY & ALL RELAYS	1	20
20	1	NURSE WORKSTATION OUTLETS	360	9	B	10	400	LCP117, SUPPLY & ALL RELAYS	1	20
20	1	SATELLITE NURSE STATION	360	11	C	12	400	LCP119, SUPPLY & ALL RELAYS	1	20
20	1	PYXIS	1000	13	A	14	400	LCP127, SUPPLY & ALL RELAYS	1	20
20	1	PYXIS	1000	15	B	16	500	LCP129, SUPPLY & ALL RELAYS	1	20
20	1	MEDS ROOM REF	800	17	C	18	500	LCP131, SUPPLY & ALL RELAYS	1	20
20	1	SATELLITE NURSE STATION	360	19	A	20	400	LCP133, SUPPLY & ALL RELAYS	1	20
20	1	NURSE WORKSTATION OUTLETS	720	21	B	22	139	LTG: RM C135 & C136	1	20
20	1	NURSE WORKSTATION OUTLETS	720	23	C	24	928	LTG: RM B105-B109, C102	1	20
20	1	NURSE WORKSTATION OUTLETS	720	25	A	26	338	LTG: RM B101, C120, C121	1	20
20	1	CRASH CART OUTLET	360	27	B	28		SPARE	1	20
20	1	SPARE		29	C	30		SPARE	1	20
20	1	SPARE		31	A	32		SPARE	1	20
20	1	SPARE		33	B	34		SPARE	1	20
20	1	SPARE		35	C	36		SPARE	1	20
20	1	SPARE		37	A	38		SPARE	1	20
20	1	SPARE		39	B	40		SPARE	1	20
20	1	SPARE		41	C	42		SPARE	1	20

PHASE TOTALS	A	B	C
Connected VA	5220	4599	4928
Demand VA	5645	4959	5510
Connected Amps	43.5	38.3	41.1
Demand Amps	47.0	41.3	45.9

* 10kVA at 100%, remainder at 50%
** 100% plus 25% of the largest Motor

PANEL SCHEDULE

PANEL: MAIN EMERGENCY BOARD
VOLTS: 480/277
LOCATION: ELECTRICAL ROOM
MOUNTING: SURFACE
NOTES:

TYPE: AMPS: 150
PHASE: 3 WIRE: 4
MAIN: MLO

DATE: April 27, 2012
PROJECT:

LOAD CLASS	Conn. VA	Demand Factor	Demand Load VA
LIGHTING	0	125%	0
OUTLETS	0	*	0
MOTOR LOADS	0	**	0
RESISTANCE LOADS	0	100%	0
SUBFEED	83953	100%	83953
MISC. LOADS	0	100%	0
SUBFEED BREAKER	0		0

	Connected	Demand
TOTAL VOLT-AMPS	83,953	83,953
MAXIMUM PHASE AMPS	105.9	105.9

BREAKER A	BREAKER P	DESCRIPTION	WATTS	CIR. NO.	PHASE	CIR. NO.	WATTS	DESCRIPTION	BREAKER P	BREAKER A
135	3	PANEL CR-1	23954	1	A	2	5393	PANELS LS1	3	
			22903	3	B	4	4475			
			22424	5	C	6	4804			
				7	A	8				
				9	B	10				
				11	C	12				
				13	A	14				
				15	B	16				
				17	C	18				
				19	A	20				
				21	B	22				
				23	C	24				
				25	A	26				
				27	B	28				
				29	C	30				
				31	A	32				
				33	B	34				
				35	C	36				
				37	A	38				
				39	B	40				
				41	C	42				

PHASE TOTALS	A	B	C
Connected VA	29347	27378	27228
Demand VA	29347	27378	27228
Connected Amps	105.9	98.8	98.3
Demand Amps	105.9	98.8	98.3

* 10kVA at 100%, remainder at 50%
** 100% plus 25% of the largest Motor

PANEL SCHEDULE

PANEL: PANEL MDF
VOLTS: 120/208
LOCATION: MDF ROOM
MOUNTING: SURFACE
NOTES:

TYPE: NEMA 1 AMPS: 225
PHASE: 3 WIRE: 4
MAIN: MLO

DATE: April 27, 2012
PROJECT:

LOAD CLASS	Conn. VA	Demand Factor	Demand Load VA
LIGHTING	0	125%	0
OUTLETS	0	*	0
MOTOR LOADS	0	**	0
RESISTANCE LOADS	0	100%	0
SUBFEED	0	100%	0
MISC. LOADS	26460	100%	26460
SUBFEED BREAKER	0		0

	Connected	Demand
TOTAL VOLT-AMPS	26,460	26,460
MAXIMUM PHASE AMPS	80.0	80.0

BREAKER A	BREAKER P	DESCRIPTION	WATTS	CIR. NO.	PHASE	CIR. NO.	WATTS	DESCRIPTION	BREAKER P	BREAKER A
20	1	RACK MOUNTED OUTLET MDF	600	1	A	2	1500	MDF ROOM 30A OUTLET	2	30
20	1	RACK MOUNTED OUTLET MDF	600	3	B	4	1500			
20	1	RACK MOUNTED OUTLET MDF	600	5	C	6	1500	MDF ROOM 30A OUTLET	2	30
20	1	RACK MOUNTED OUTLET MDF	600	7	A	8	1500			
20	1	RACK MOUNTED OUTLET IDF	600	9	B	10	1500	MDF ROOM 30A OUTLET	2	30
20	1	RACK MOUNTED OUTLET IDF	600	11	C	12	1500			
20	1	RACK MOUNTED OUTLET IDF	600	13	A	14	1500	MDF ROOM 30A OUTLET	2	30
20	1	MDF ROOM WALL OUTLETS	360	15	B	16	1500			
20	1	MDF ROOM WALL OUTLETS	360	17	C	18	1500	IDF ROOM 30A OUTLET	2	30
20	1	SPARE		19	A	20	1500			
20	1	IDF ROOM OUTLET	540	21	B	22	1500	IDF ROOM 30A OUTLET	2	30
20	1	SPARE		23	C	24	1500			
20	1	SPARE		25	A	26	1500	IDF ROOM 30A OUTLET	2	30
20	1	SPARE		27	B	28	1500			
20	1	SPARE		29	C	30		SPACE		
20	1	SPARE		31	A	32		SPACE		
20	1	SPARE		33	B	34		SPACE		
20	1	SPARE		35	C	36		SPACE		
20	1	SPARE		37	A	38		SPACE		
20	1	SPARE		39	B	40		SPACE		
20	1	SPARE		41	C	42		SPACE		

PHASE TOTALS	A	B	C
Connected VA	9300	9600	7560
Demand VA	9300	9600	7560
Connected Amps	77.5	80.0	63.0
Demand Amps	77.5	80.0	63.0

* 10kVA at 100%, remainder at 50%
** 100% plus 25% of the largest Motor

MECHANICAL EQUIPMENT CONNECTION SCHEDULE

TAG	DESCRIPTION	VOLTAGE	PHASE	HP	KW	AMP	FEEDER DESCRIPTION	CIRCUIT BREAKER	STARTER	CIRCUIT	DISCONNECT	VFD	NOTES
CHWP-1	CHILLED WATER PUMP	208	3	7.5		24.2	4 #8 CU , 1 #10 GND. IN 1" C.	40/3	NA	N1-1,3,5	DIV 26	DIV 25	
CHWP-2	CHILLED WATER PUMP	208	3	7.5		24.2	4 #8 CU , 1 #10 GND. IN 1" C.	40/3	NA	N1-7,9,11	DIV 26	DIV 25	
HWP-1	HEATING WATER PUMP	208	3	3		10.6	4 #12 CU , 1 #12 GND. IN 3/4"C.	20/3	NA	CR1-1,3,5	DIV 26	DIV 25	
HWP-2	HEATING WATER PUMP	208	3	3		10.6	4 #12 CU , 1 #12 GND. IN 3/4"C.	20/3	NA	CR1-7,9,11	DIV 26	DIV 25	
BCP-1	CIRCULATING PUMP	208	3	0.75		3.5	4 #12 CU , 1 #12 GND. IN 3/4"C.	15/3	NA	CR1-2,4,6	DIV 26	NA	2
BCP-2	CIRCULATING PUMP	208	3	0.75		3.5	4 #12 CU , 1 #12 GND. IN 3/4"C.	15/3	NA	CR1-8,10,12	DIV 26	NA	2
B-1	BOILER CONNECTION	120	1		0.5	4.2	2 #12 CU , 1 #12 GND. IN 3/4" C.	15/1	NA	CR1-13	DIV 26	NA	4
B-2	BOILER CONNECTION	120	1		0.5	4.2	2 #12 CU , 1 #12 GND. IN 3/4" C.	15/1	NA	CR1-15	DIV 26	NA	4
CH-1	CHILLER	208	3		131	363.6	SEE ONE LINE DIAGRAM		NA	MDA	DIV 26	NA	
AHU -S	AIR HANDLER - SUPPLY	208	3		41	113.8	4 #1/O CU , 1 #6 GND. IN 2" C.	150/3	NA	CR1-14,16,18	DIV 26	DIV 25	6
AHU-R	AIR HANDLER - RETURN	208	3		11.1	30.8	4 #8 CU , 1 #10 GND. IN 1" C.	40/3	NA	CR1-20,22,24	DIV 26	DIV 25	6
EF-1	EXHAUST FAN	120	1	0.25		5.8	2 #12 CU , 1 #12 GND. IN 3/4" C.	15/1	DIV 26	CR1-17	DIV 25	NA	3
EF-2	EXHAUST FAN	120	1	0.25		5.8	2 #12 CU , 1 #12 GND. IN 3/4" C.	15/1	DIV 26	CR1,19	DIV 25	NA	3
EF-3	EXHAUST FAN	120	1	0.25		5.8	2 #12 CU , 1 #12 GND. IN 3/4" C.	15/1	DIV 26	CR1-21	DIV 25	NA	3
EF-4	EXHAUST FAN	120	1	0.25		5.8	2 #12 CU , 1 #12 GND. IN 3/4" C.	15/1	DIV 26	CR1-23	DIV 25	NA	3
ACU-1	AC UNIT INDOOR	208	1			0.4	NA	NA	NA	NA	DIV 26	NA	1
ACU-2	AC UNIT INDOOR	208	1			0.4	NA	NA	NA	NA	DIV 26	NA	1
ACU-3	AC UNIT INDOOR	208	1			0.4	NA	NA	NA	NA	DIV 26	NA	1
CU-1	AC UNIT OUTDOOR	208	1			18.0	2#10 CU, 1 #10 GND IN 3/4" C	30/2	NA	N1-2,4	DIV 26	NA	1,3
CU-2	AC UNIT OUTDOOR	208	1			18.0	2#10 CU, 1 #10 GND IN 3/4" C	30/2	NA	N1-6,8	DIV 26	NA	1,3
CU-3	AC UNIT OUTDOOR	208	1			18.0	2#10 CU, 1 #10 GND IN 3/4" C	30/2	NA	N1-10,12	DIV 26	NA	1,3
WH-1	WATER HEATER	120	1			1.0	2 #12 CU , 1 #12 GND. IN 1/2" C.	15/1	NA	N1-14	NA	N A	
WH2	WATER HEATER	120	1			1.0	2 #12 CU , 1 #12 GND. IN 1/2" C.	15/1	NA	N1-16	NA	N A	
DP-1	PUMP	120	1			0.8	2 #12 CU , 1 #12 GND. IN 1/2" C.	15/1	DIV 26	N1-18	DIV 26	N A	
FCU-1	FAN COIL UNIT	120	1			0.2	2 #12 CU , 1 #12 GND. IN 1/2" C.	20/1	NA	NA	DIV 25	N A	5
FCU-2	FAN COIL UNIT	120	1			0.1	2 #12 CU , 1 #12 GND. IN 1/2" C.	20/1	NA	NA	DIV 25	N A	5
FCU-3	FAN COIL UNIT	120	1			0.2	2 #12 CU , 1 #12 GND. IN 1/2" C.	20/1	NA	NA	DIV 25	N A	5
FMT-1	FUEL OIL MONITORING	120	1			1.0	2 #12 CU , 1 #12 GND. IN 1/2" C.	20/1	NA	CR1-27	NA	NA	

NOTES
1. SEE DETAIL 2/ES104 FOR WIRING DETAIL
2. FED FROM BOILER CONTROL PANEL
3. PROVIDE NEMA 3R DISCONNECT
4. PROVIDE EPO SWITCH. SEE DETAIL 5/ES-105.
5. CONNECT TO SAME BRANCH CIRCUIT AS LIGHT IN SAME ROOM(UNSWITCHED LEG).
6. SINGLE POINT CONNECTION. ELECTRICAL CONTRACTOR TO PROVIDE CONNECTION UP TO VFD. WIRING PROVIDED BY AHU VENDOR FROM VFD TO MOTORS.

Revisions: Date

CONSULTANTS:

BALZHISER & HUBBARD ENGINEERS
MECHANICAL • ELECTRICAL • CIVIL • SURVEYORS
100 WEST 13TH AVENUE
EUGENE, OR 97401
P: 541-686-8478
F: 541-345-5303

2100–031–10es–104.2.dwg

REGISTERED PROFESSIONAL ENGINEER 50476
DIGITAL SIGNATURE
OREGON
JULY 21, 1998
KEVIN M. WARE
EXPIRES 6/30/12

ARCHITECT/ENGINEERS:

Tina Ely architect
2915 Wingate Street / Eugene, OR 97408
541.521.2477 / Tina.Ely@comcast.net

Drawing Title: ELECTRICAL SCHEDULES
Approved: Project Director
Project Title: SEISMIC REPLACEMENT BLDG 2 PHASE 1 MINOR ACUTE PSYCHIATRIC WARD
Location: ROSEBURG, OREGON
Date: 30 APR 2012 | Checked: KMW | Drawn: JSG
VA Project Number: 653-322
Building Number: 086
Sheet Number: ES-104.2

Office of Construction and Facilities Management
Department of Veterans Affairs

VA FORM 08-6231

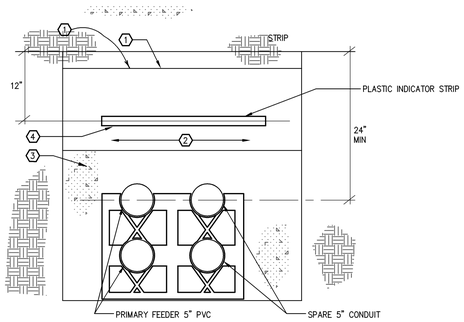

1 TRENCHING DETAIL - SECONDARY FEEDER PRIMARY FEEDERS - SIMILAR

NO SCALE

DETAIL 1 NOTES:

1. SEE SPECIFICATION FOR TRENCH AND BACKFILL REQUIREMENTS. RETURN SURFACE TO EXISTING CONDITION. WHERE RUN UNDER PAVING, REPAVE TO MATCH SURROUNDINGS.
2. BACKFILL WITH ORIGINAL NATIVE SOIL.
3. PROVIDE 3" CONCRETE TOP COVER AND 3" SIDE COVER FOR DUCTS, TYPICAL.
4. LAY IN PLASTIC INDICATOR STRIP, 12" BELOW GRADE. 3" RED, NON DETECTABLE, WORDING: "CAUTION BURIED ELECTRIC LINE" BLACK LETTERING. ACCEPTABLE MANUFACTURERS: BRADY, PANDUIT.
5. PROVIDE MINIMUM 12 INCHES SPACE BETWEEN POWER AND GAS LINE.

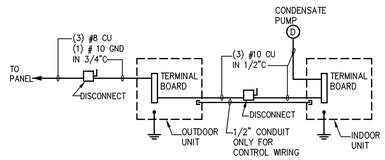

2 AC TYPICAL WIRING SCHEMATIC

NO SCALE

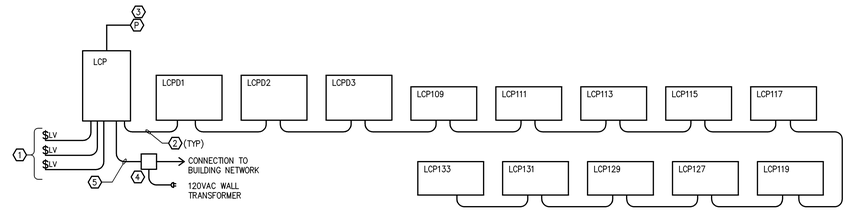

LIGHTING CONTROL PANEL SCHEMATIC NOTES

1. WHERE INDICATED ON DRAWINGS, PROVIDE LOW VOLTAGE CONTROL STATION SWITCHES. ROUTE WIRING TO LIGHTING CONTROL PANEL.
2. RS-485 NETWORK. DAISY CHAIN LIGHTING CONTROL PANELS USING TWISTED PAIR (BELDEN #9841) OR CATEGORY 5 CABLE.
3. PHOTOCELL: LOCATE ON ROOF WITH UNOBSTRUCTED VIEW OF NORTHERN SKY.
4. ETHERNET INTERFACE MODULE.
5. RS-232 CABLE PROVIDED WITH ETHERNET INTERFACE MODULE.

3 LIGHTING CONTROL PANEL SCHEMATIC

NO SCALE BASIS OF DESIGN: GREENGATE

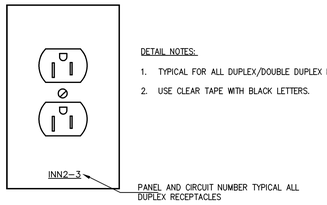

DETAIL NOTES:

1. TYPICAL FOR ALL DUPLEX/DOUBLE DUPLEX RECEPTACLES.
2. USE CLEAR TAPE WITH BLACK LETTERS.

4 DEVICE PLATE DETAIL

SCALE: NONE

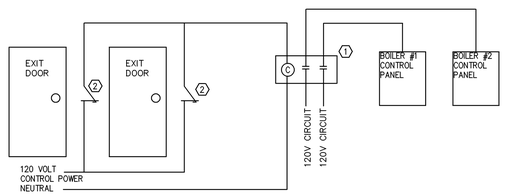

5 EMERGENCY BOILER SHUTDOWN CONTROL DIAGRAM

NO SCALE

EMERGENCY BOILER SHUTDOWN CONTROL DIAGRAM NOTES:

1. PROVIDE RELAY AT BOILER CONTROL PANEL TO REMOVE POWER TO BOILERS. RELAY SHALL BE ELECTRICALLY HELD. NUMBER OF POLES IN RELAY SHALL MATCH OR EXCEED NUMBER OF PHASE CONDUCTORS PROVIDING POWER TO THE BOILER CONTROL PANELS. SQUARE D CONTACTOR L SERIES OR APPROVED.
2. PROVIDE PUSH PULL STATION AT EACH BOILER ROOM DOOR FOR SHUTDOWN OF BOILERS. PULL STATION SHALL BE LOCATED JUST OUTSIDE THE BOILER ROOM DOOR(S). IF THE BOILER ROOM DOOR IS ON THE BUILDING EXTERIOR, THE SWITCH SHALL BE LOCATED JUST INSIDE THE DOOR. PUSH PULL STATION SHALL CONTAIN AT LEAST ONE NORMALLY CLOSED SET OF CONTACTS. SQUARE D ZB5AX4 SERIES OR APPROVED.

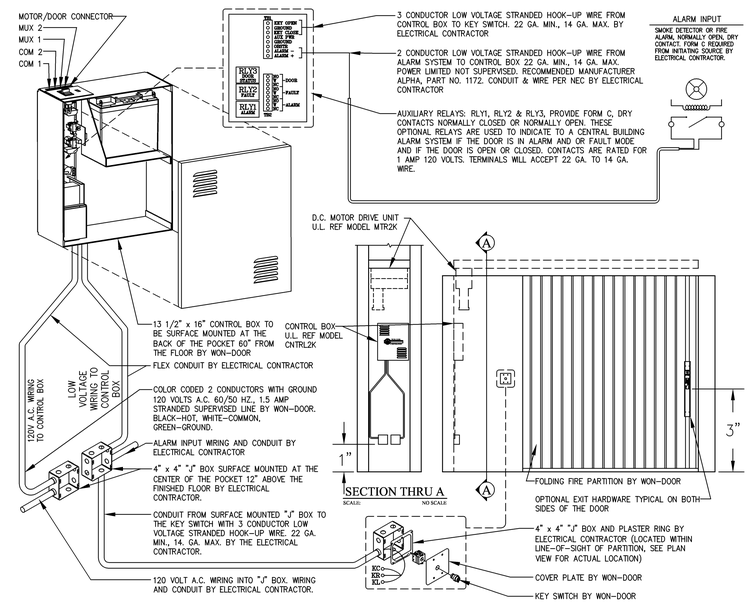

6 WON-DOOR DETAIL

NO SCALE

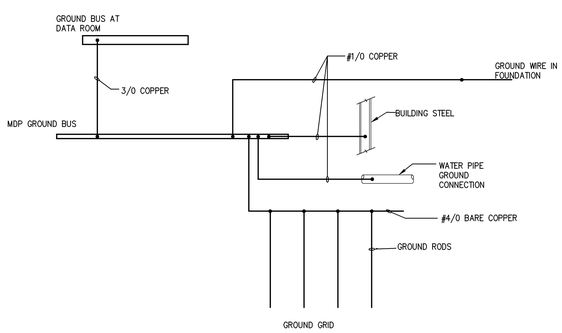

7 GROUNDING DETAIL

SCALE: NONE

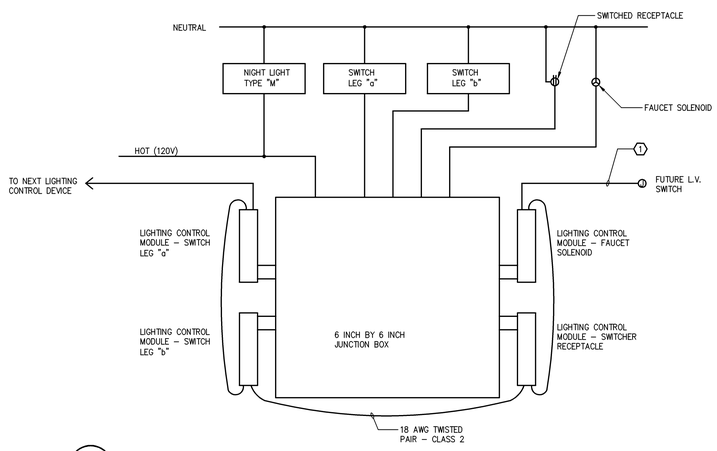

8 PATIENT ROOM RELAY PANEL - WIRING DIAGRAM

SCALE: NONE

DETAIL 2 NOTES:

1. PROVIDE 18 AWG TWISTED PAIR TO EMPTY JUNCTION FOR INSTALLATION OF FUTURE LOW VOLTAGE SWITCH.

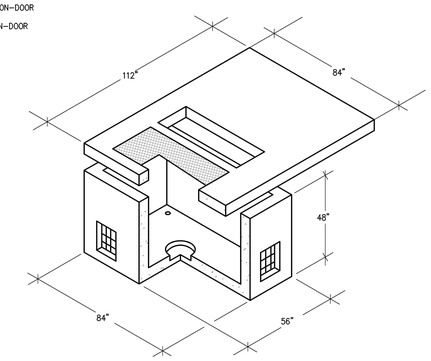

9 TRANSFORMER/SECTIONALIZING PAD VAULT WITH ACCESS

NO SCALE

Revisions:	Date

CONSULTANTS:

BALZHISER & HUBBARD ENGINEERS
MECHANICAL ELECTRICAL CIVIL SURVEYORS
100 WEST 13TH AVENUE EUGENE, OR 97401
P: 541-686-8678
F: 541-345-5301
2100-031-10es-105.dwg

REGISTERED PROFESSIONAL ENGINEER 50476 OREGON JULY 21, 1989 KEVIN M. WIRE
DIGITAL SIGNATURE
EXPIRES 6/30/12

ARCHITECT/ENGINEERS:

Tina Ely architect
2915 Wingate Street / Eugene, OR 97408
541.521.2477 / Tina.Ely@comcast.net

Drawing Title: ELECTRICAL DETAILS	Project Title: SEISMIC REPLACEMENT BLDG 2 PHASE 1 MINOR ACUTE PSYCHIATRIC WARD	VA Project Number: 653-322	Office of Construction and Facilities Management
Approved: Project Director	Location: ROSEBURG, OREGON	Building Number: 086	
	Date: 30 APR 2012 / Checked: KMW / Drawn: JSG	Sheet Number: ES-105	Department of Veterans Affairs

VA FORM 08-6231

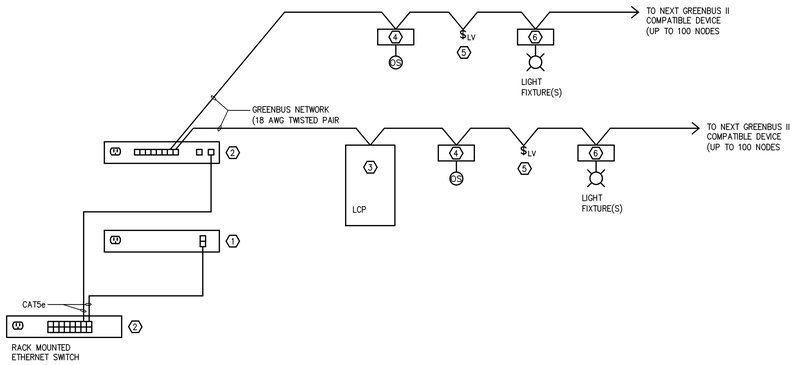

1 ENCELIUM GREENBUS II - RISER DIAGRAM

BASIS OF DESIGN: ENCELIUM

DETAIL 1 NOTES:

1. SYSTEM SUPPORT UNIT (SSU) WALL MOUNTED IN ELECTRICAL ROOM.
2. ENERGY CONTROL UNIT (ECU) WALL MOUNTED IN ELECTRICAL ROOM.
3. RELAY PANEL WITH 12 RELAYS. PANEL LOCATED IN ELECTRICAL ROOM.
4. SENSOR INTERFACE MODULE (SIM). PROVIDE ONE MODULE FOR EACH OCCUPANCY SENSOR AND PHOTOCELL WHERE INDICATED. TYPICAL.
5. LOW VOLTAGE WALL CONTROLLER WITH GREENBUS II COMMUNICATION CAPABILITIES. TYPICAL.
6. LUMINAIRE CONTROL MODULE (LCM). PROVIDE MODULES LOCATED AT FIXTURE(S) WHERE INDICATED. TYPICAL.

Revisions:	Date

CONSULTANTS:

BALZHISER & HUBBARD ENGINEERS
MECHANICAL • ELECTRICAL • CIVIL • SURVEYORS
100 WEST 13TH AVENUE EUGENE, OR 97401
P: 541-686-8678
F: 541-343-5303
2100-031-10es-105.1.dwg

REGISTERED PROFESSIONAL ENGINEER 50476 DIGITAL SIGNATURE OREGON JULY 21, 1995 KEVIN M. WARE
EXPIRES 6/30/12

ARCHITECT/ENGINEERS:

Tina Ely architect
2915 Wingate Street / Eugene, OR 97408
541.521.2477 / Tina.Ely@comcast.net

Drawing Title	ELECTRICAL DETAILS
Approved: Project Director	
Project Title	SEISMIC REPLACEMENT BLDG 2 PHASE 1 MINOR ACUTE PSYCHIATRIC WARD
Location	ROSEBURG, OREGON
Date	30 APR 2012
Checked	KMW
Drawn	JSG
VA Project Number	653-322
Building Number	086
Sheet Number	ES-105.1

Office of Construction and Facilities Management
Department of Veterans Affairs

VA FORM 08-6231

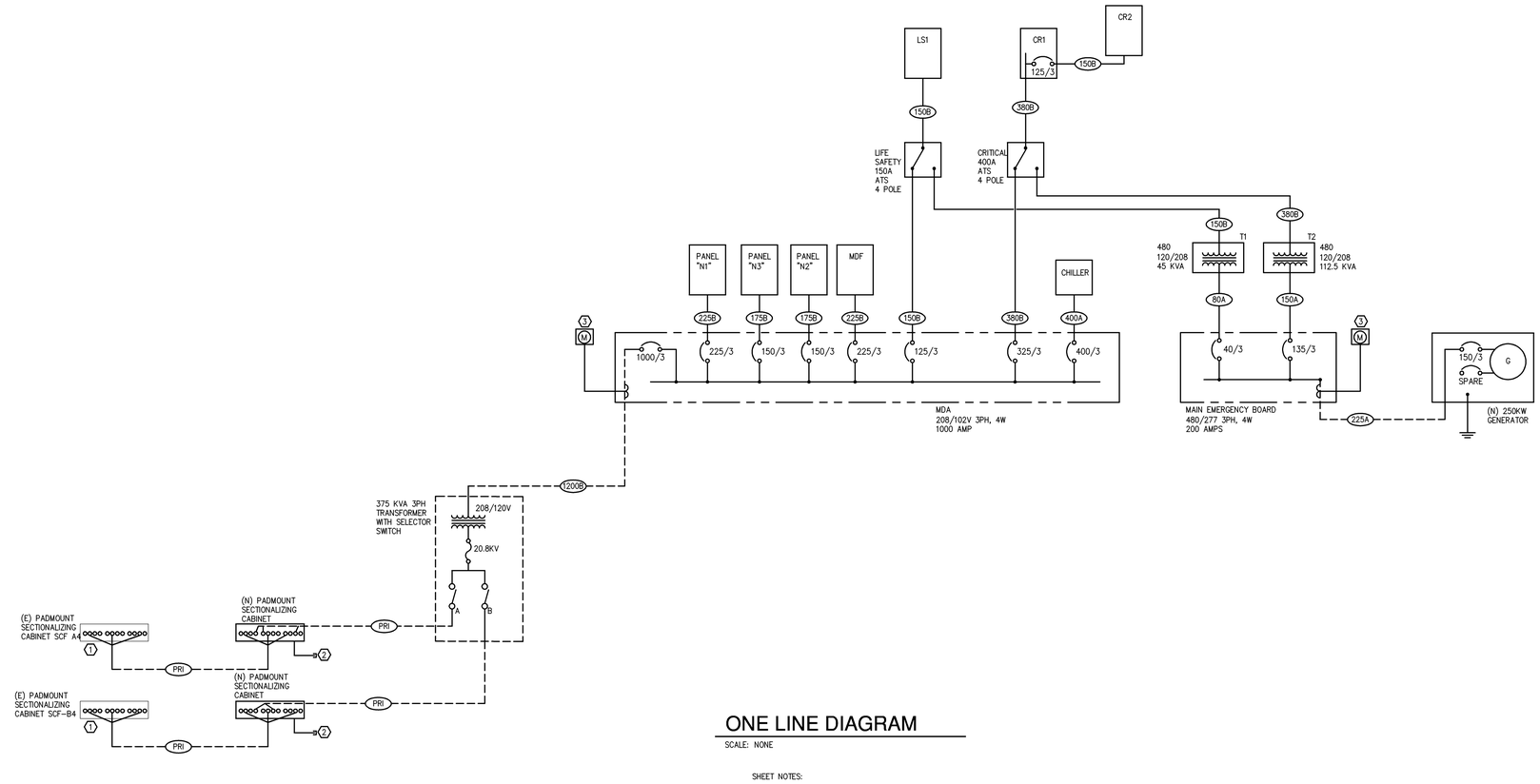

ONE LINE DIAGRAM

SCALE: NONE

SHEET NOTES:

1. CONNECT CABLE TO SPARE CONNECTOR.
2. STUB (3) 5 INCH CONDUITS. SEE SITE PLAN.
3. SEE SPECIFICATION SECTION 25 10 10 FOR METER INFORMATION.

Load Summary - Building Total

Load Type	Total load (KW)
Mechanical	243
Lighting	21
Devices	30
Misc	53
Total (KW)	347
Total Amperes @ 208V	964

Load Summary - Emergency

Load Type	Total load (KW)
LIFE SAFETY BRANCH	17
CRITICAL BRANCH	77
Total (KW)	94
Total Amperes @ 208V	261
Total Amperes @ 480V	113

FEEDER SCHEDULE

DESIG.	DESCRIPTION	COMMENTS
50A	3 #8 CU , 1 #10 GND. IN 1" C.	Verify 75 degree rating of an older brkr.
80A	3 #4 CU , 1 #8 GND. IN 1 1/4" C.	Verify 75 degree rating of an older brkr.
125B	4 #1 CU, 1 #6 GND. IN 1 1/2" C.	
150A	3 #1/O CU , 1 #6 GND. IN 2" C.	
150B	4 #1/O CU , 1 #6 GND. IN 2" C.	
175B	4 #2/O CU , 1 #6 GND. IN 2" C.	
200A	3 #3/O CU , 1 #6 GND. IN 2" C.	
200B	4 #3/O CU , 1 #6 GND. IN 2 1/2" C.	
225B	4 #4/0 CU , 1 #4 GND. IN 2 1/2" C.	
380B	4 #500 CU , 1 #2 GND. IN 3 1/2" C.	
400A	2 SETS OF (3 #3/O CU , 1 #2 GND. IN 2 1/2" C.)	
400B	2 SETS OF (4 #3/O CU , 1 #2 GND. IN 2 1/2" C.)	
1200B	4 SETS OF (4 #350 CU , 1 #4/O GND. IN 3 1/2" C.)	
PRI	#4/0 3 WIRE MEDIUM VOLTAGE CABLES IN 4"C	

KEY:

X = EMPTY CONDUITS	T = 2 WIRE
S = 4 WIRE SERVICE (NO GND.)	A = 3 WIRE
N = 4 WIRE W/ 200% RATED NEUTRAL	B = 4 WIRE
G = 4 WIRE W/ 200% RATED NEUTRAL & ISO. GND.	I = 4 WIRE W/ ISO. GND.

Revisions:	Date

CONSULTANTS:

BALZHISER & HUBBARD ENGINEERS
MECHANICAL • ELECTRICAL • CIVIL • SURVEYORS
100 WEST 13TH AVENUE EUGENE, OR 97401
P: 541-686-8678
F: 541-343-5303
2100-031-10es-106.dwg

REGISTERED PROFESSIONAL ENGINEER 50476 OREGON JULY 21, 1995 KEVIN M. WARE
DIGITAL SIGNATURE
EXPIRES 6/30/12

ARCHITECT/ENGINEERS:

Tina Ely architect
2915 Wingate Street / Eugene, OR 97408
541.521.2477 / TinaEly@comcast.net

Drawing Title: ONE LINE DIAGRAM

Approved: Project Director

Project Title: SEISMIC REPLACEMENT BLDG 2 PHASE 1 MINOR ACUTE PSYCHIATRIC WARD

Location: ROSEBURG, OREGON

Date: 30 APR 2012 | Checked: KMW | Drawn: JSG

VA Project Number: 653-322

Building Number: 086

Sheet Number: ES-106

Office of Construction and Facilities Management

Department of Veterans Affairs

VA FORM 08-6231