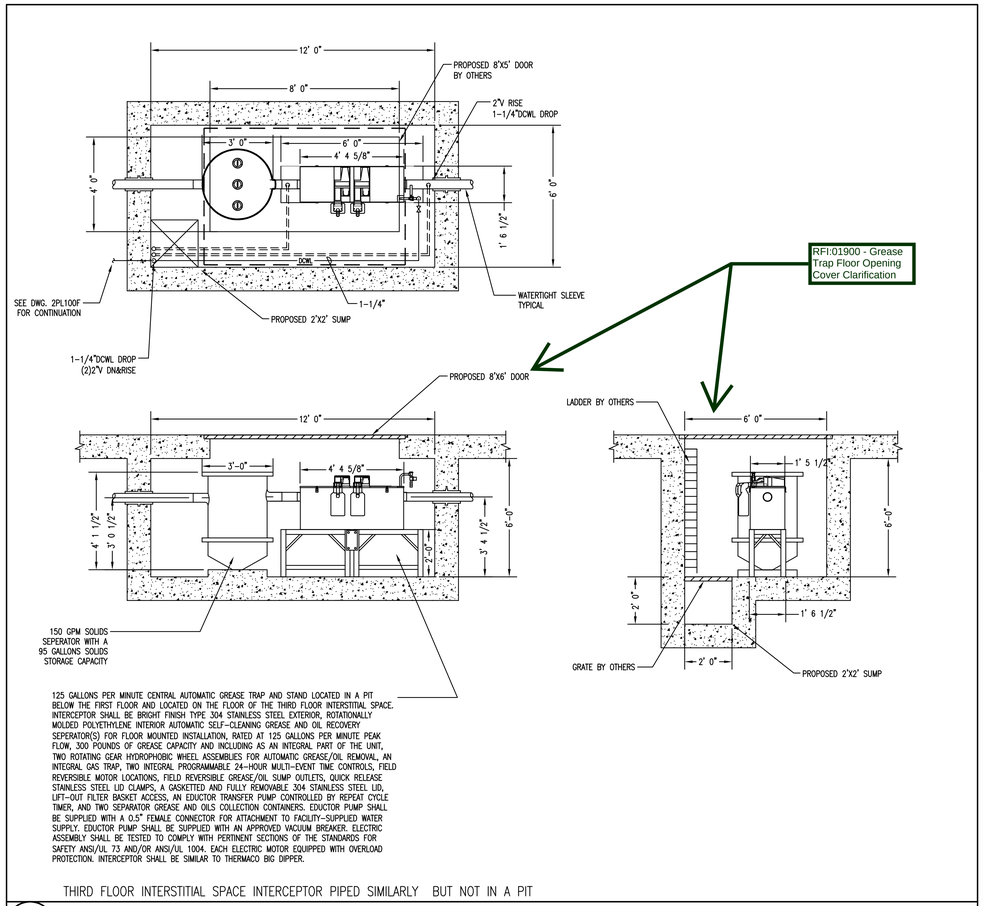

125 GALLONS PER MINUTE CENTRAL AUTOMATIC GREASE TRAP AND STAND LOCATED IN A PIT BELOW THE FIRST FLOOR AND LOCATED ON THE FLOOR OF THE THIRD FLOOR INTERSTITIAL SPACE. INTERCEPTOR SHALL BE BRIGHT FINISH TYPE 304 STAINLESS STEEL EXTERIOR, ROTATIONALLY MOLDED POLYETHYLENE INTERIOR AUTOMATIC SELF-CLEANING GREASE AND OIL RECOVERY SEPERATOR(S) FOR FLOOR MOUNTED INSTALLATION, RATED AT 125 GALLONS PER MINUTE PEAK FLOW, 300 POUNDS OF GREASE CAPACITY AND INCLUDING AS AN INTEGRAL PART OF THE UNIT, TWO ROTATING GEAR HYDROPHOBIC WHEEL ASSEMBLIES FOR AUTOMATIC GREASE/OIL REMOVAL, AN INTEGRAL GAS TRAP, TWO INTEGRAL PROGRAMMABLE 24-HOUR MULTI-EVENT TIME CONTROLS, FIELD REVERSIBLE MOTOR LOCATIONS, FIELD REVERSIBLE GREASE/OIL SUMP OUTLETS, QUICK RELEASE STAINLESS STEEL LID CLAMPS, A GASKETTED AND FULLY REMOVABLE 304 STAINLESS STEEL LID, LIFT-OUT FILTER BASKET ACCESS, AN EDUCTOR TRANSFER PUMP CONTROLLED BY REPEAT CYCLE TIMER, AND TWO SEPARATOR GREASE AND OILS COLLECTION CONTAINERS. EDUCTOR PUMP SHALL BE SUPPLIED WITH A 0.5" FEMALE CONNECTOR FOR ATTACHMENT TO FACILITY-SUPPLIED WATER SUPPLY. EDUCTOR PUMP SHALL BE SUPPLIED WITH AN APPROVED VACUUM BREAKER. ELECTRIC ASSEMBLY SHALL BE TESTED TO COMPLY WITH PERTINENT SECTIONS OF THE STANDARDS FOR SAFETY ANSI/UL 73 AND/OR ANSI/UL 1004. EACH ELECTRIC MOTOR EQUIPPED WITH OVERLOAD PROTECTION. INTERCEPTOR SHALL BE SIMILAR TO THERMACO BIG DIPPER.

THIRD FLOOR INTERSTITIAL SPACE INTERCEPTOR PIPED SIMILARLY BUT NOT IN A PIT

2 GREASE AND SOLIDS INTERCEPTOR NTS

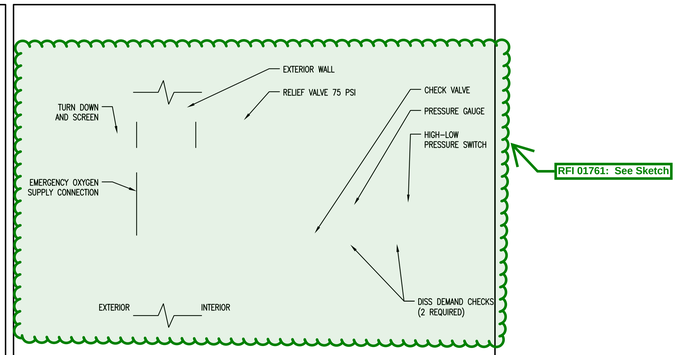

1 RECESSED MOUNT EMERGENCY OXYGEN SUPPLY CONNECTION NTS

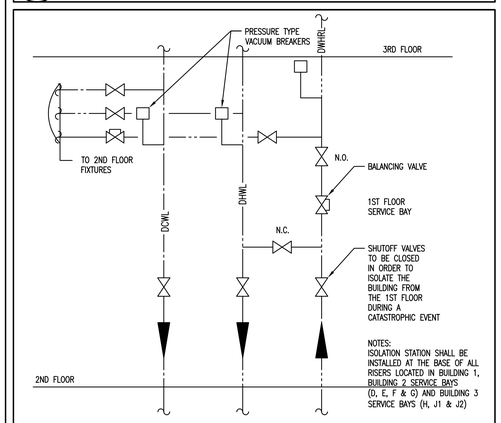

3 FIRST FLOOR EMERGENCY ISOLATION STATION NTS

RFI: 01836 - Building 02 Med Gas Piping Installation Clarification: Mains are to be in the interstitial space and the branches shall be above ceiling,

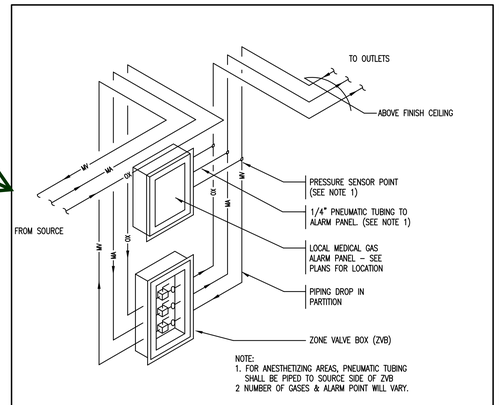

4 MEDICAL GAS ZONE VALVE BOX AND ALARM PANEL NTS

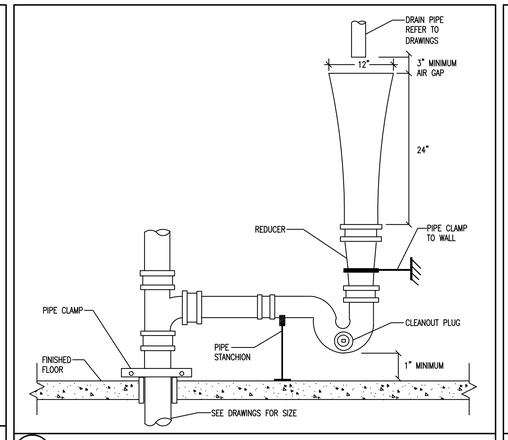

5 OPEN END DRAIN DETAIL (OED)

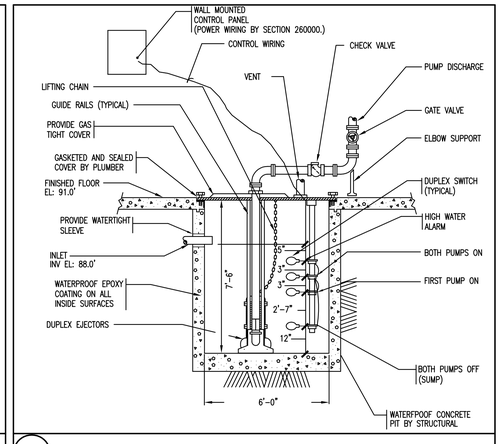

6 DUPLEX SEWAGE EJECTOR - WATER FEATURE MECHANICAL ROOM

CONSTRUCTION DOCUMENTS 1
FULLY SPRINKLERED

REVISIONS:	DATE

CONSULTANTS:

DESMAN ASSOCIATES / PARKING
CODE CONSULTANTS, INC. / CODE CONSULTANT
THE SEXTANT GROUP / AV & ACOUSTICAL
HAMMER DESIGN ASSOCIATES / FOOD SERVICE
PYBURN & ODOM / ABATEMENT
TATA & HOWARD / TANK CONSULTANT
I.S.C. GROUP, INC./ IRRIGATION
DAN EUSER WATER ARCHITECTURE, INC./ WATER FEATURE

STATE OF LOUISIANA
KURT J. SCHEREN
License No. 34079
PROFESSIONAL ENGINEER
FEB 29 2012

ARCHITECT/ENGINEERS:

studio NOVA
SCHRENK & PETERSON CONSULTING ENGINEERS / CIVIL
KORDA/NEMETH ENGINEERING / STRUCTURAL
BR+A CONSULTING ENGINEERS / MECH, ELECT, PLUMBING, LOW VOLTAGE
ARCHITECTURAL ENGINEERING / PLUMBING
SCALES ASSOCIATES / FIRE PROTECTION

DRAWING TITLE: PLUMBING DETAILS

APPROVED: PROJECT DIRECTOR

PROJECT TITLE: SLVHCS REPLACEMENT MEDICAL CENTER PROJECT

LOCATION: NEW ORLEANS, LOUISIANA

DATE: February 29, 2012 | CHECKED: RVD | DRAWN: CADD

PROJECT NUMBER: 629-HS2-401

BUILDING NUMBER:

DOCUMENT SET PACKAGE: WP_08

DRAWING NUMBER: 0P509

OFFICE OF CONSTRUCTION AND FACILITIES MANAGEMENT

Department of Veterans Affairs

VA FORM 08-6231