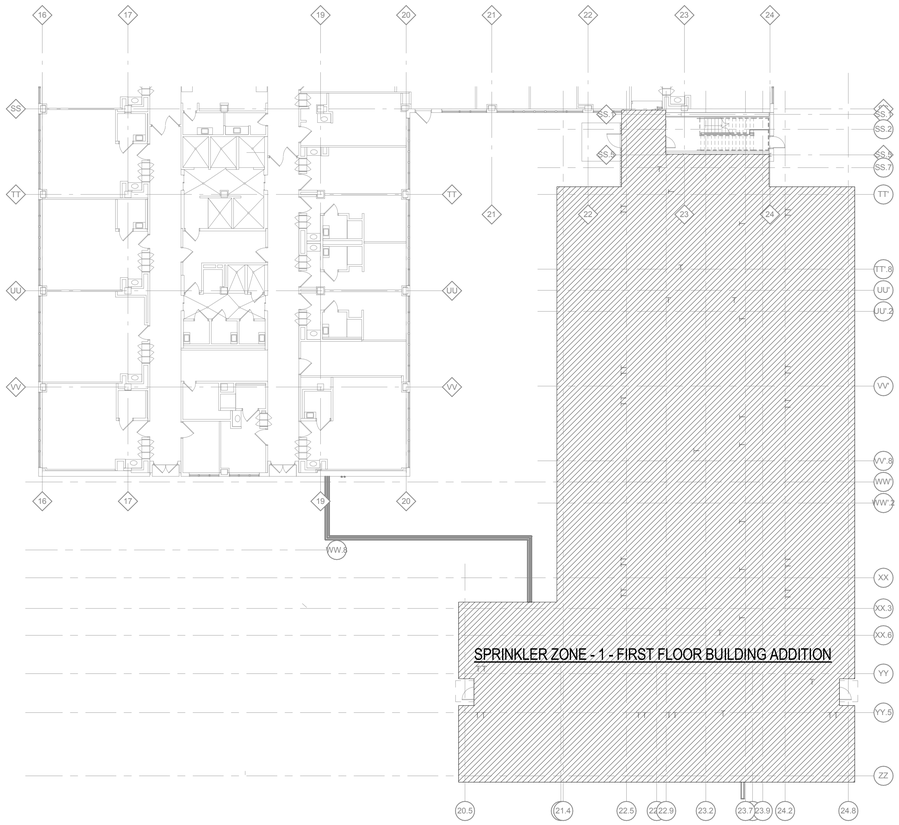

1 FIRE PROTECTION ZONE PLAN - FIRST FLOOR
1/16" = 1'-0"

SPRINKLER HEAD LEGEND

SYMBOL	MANUFACTURER OR APPROVED EQUAL	TYPE	MODEL	ORIFICE	TEMP. RATING (°F)
	VIKING	UPRIGHT W/ GUARD	MICROFAST MODEL M	1/2"	155 °
	VIKING	SEMI-RECESSED, QUICK RESPONSE	HORIZON	1/2"	155 °

FIRE PROTECTION SYMBOLS

- F — FIRE LINE
- D — DRAIN LINE
- SEMI-RECESSED SPRINKLER
- UPRIGHT SPRINKLER W/ GUARD
- ZONE CONTROL VALVE
- TAMPER SWITCH
- FDHV — FIRE DEPARTMENT HOSE VALVE
- XR — EXISTING TO REMAIN
- RISE
- DROP
- CAP
- (1) (2) — KEYED NOTE DESCRIBING WORK TO BE DONE
- CONNECT TO EXISTING PIPING THIS POINT

FIRE PROTECTION GENERAL NOTES

1. ALL WORK SHOWN IS NEW UNLESS INDICATED OTHERWISE.
2. COORDINATE ALL WORK WITH OTHER TRADES AND EXISTING CONDITIONS PRIOR TO THE FABRICATION OR INSTALLATION OF ANY PIPING.
3. THE DRAWINGS ARE DIAGRAMMATIC. THE CONTRACTOR MUST FIELD VERIFY ACTUAL CONDITIONS AT THE SITE PRIOR TO PROCEEDING WITH THE WORK. CONTRACTOR IS TO PROVIDE A COMPLETE SYSTEM INCLUDING ALL APPURTANCES, VALVES, AND AUXILIARY DRAINS.
4. ALL EXISTING SERVICES ARE SHOWN IN THEIR APPROXIMATE LOCATIONS.
5. ALL NEW PIPING SHALL BE INSTALLED IN SUCH A WAY THAT IT DOES NOT HAMPER ACCESS TO NEW OR EXISTING VALVES, ACCESS DOORS OR EQUIPMENT.
6. SPRINKLER PIPING SHALL BE HYDRAULICALLY DESIGNED BY THE SPRINKLER CONTRACTOR AND SHALL BE APPROVED BY ALL AUTHORITIES HAVING JURISDICTION. VELOCITIES OF WATER IN HYDRAULICALLY DESIGNED SPRINKLER PIPING SHALL NOT EXCEED TWENTY FEET PER SECOND.
7. ALL SPRINKLER HEADS INSTALLED IN LAY-IN CEILINGS SHALL HAVE THE HEADS LOCATED IN THE CENTER OF TILES. IF FOR ANY REASON HEADS CANNOT BE LOCATED IN THE CENTER OF TILES, THEN THE ARCHITECT/ENGINEER SHALL BE CONTACTED FOR NEW LOCATIONS BEFORE INSTALLING ANY HEAD OR PIPING.
8. CONTRACTOR SHALL INCLUDE IN HIS BID A WATER FLOW TEST/FIRE PUMP TEST. THE RESULTS OF WHICH SHALL BE USED TO PERFORM HYDRAULIC CALCULATIONS.
9. ENTIRE SYSTEM SHALL BE INSTALLED IN ACCORDANCE WITH NFPA 13 2013 EDITION.
10. ALL WORK SHALL BE STRICTLY COORDINATED AMONG ALL INDIVIDUAL CONTRACTORS BEFORE ANY WORK IS PERFORMED.
11. DO NOT ROUTE PIPING THROUGH ELEVATOR SHAFT(S), ELEVATOR EQUIPMENT ROOM(S) & ELECTRICAL ROOMS, PIPING TO TERMINATE AT SPRINKLER HEAD.
12. PIPES 2-1/2" & LARGER TO BE SCHEDULE 10 STEEL PIPE WITH GROOVED END PREP.
13. PIPES 2" & SMALLER TO SCHEDULE 40 STEEL PIPE WITH THREADED END PREP OR AS NEEDED.
14. PIPES TO BE SIZED PER HYDRAULIC CALCULATIONS.
15. VERIFY ALL CEILING HEIGHTS AT SITE PRIOR TO INSTALLATION. REFER TO ARCHITECTURAL DRAWINGS FOR LOCATIONS OF CEILINGS AND CEILING TYPES.
16. IN ROOMS WHICH ARE INDICATED AS BEING MECHANICAL AND ELECTRICAL ROOMS, THE SPRINKLER CONTRACTOR SHALL COORDINATE THE LOCATION OF HIS PIPING AND SPRINKLER HEADS TO AVOID INSTALLATION OVER ELECTRICAL PANELS OR EQUIPMENT. PROVIDE ADDITIONAL SPRINKLER HEADS AS NECESSARY, AT NO ADDITIONAL COST TO THE OWNER. REFER TO HVAC AND ELECTRICAL DRAWINGS.
17. DESIGN DENSITIES: A. LIGHT HAZARD . 10/1500 ALL AREAS.
    B. ORDINARY HAZARD . 15/1500 - STORAGE / MECHANICAL ROOMS
18. FIRE PROTECTION HYDRAULIC CALCULATIONS FOR AUTOMATIC SPRINKLER SYSTEMS SHALL INCORPORATE A MINIMUM 10% SAFETY FACTOR.
19. PRESSURE TEST OF THE AUTOMATIC SPRINKLER SYSTEM SHALL BE WITNESSED BY THE FIRE DEPARTMENT UNLESS SPECIFICALLY WAIVED. TWO (2) WEEKS WRITTEN ADVANCE NOTICE OF TEST SHALL BE GIVEN.
20. FIRE PROTECTION CONTRACTOR SHALL COORDINATE HIS WORK WITH MECHANICAL, ELECTRICAL AND ALL OTHER DISCIPLINES TO AVOID INTERFERENCES PRIOR TO FABRICATION OF ANY PIPE. INTERFERENCES SHALL INCLUDE ROOF OPENINGS, BUS DUCTS, GANGED CONDUIT, DUCT, RUNS, ETC.
21. ALL PIPE PENETRATIONS THROUGH FLOORS OR WALLS SHALL BE SLEEVED AND SEALED TO MAKE WATERTIGHT AND MAINTAIN FIRE RATING. CONTRACTOR TO PROPERLY CLEAN AND SEAL FULL THICKNESS OF THE PENETRATION WITH AN APPROVED FIRE STOP SYSTEM OF EQUAL OR GREATER FIRE RESISTANCE.
22. ALL VALVE SUPERVISORY SWITCHES AND WATER FLOW SWITCHES SHALL BE PROVIDED AND INSTALLED BY THE FIRE PROTECTION CONTRACTOR AND WIRED BY THE ELECTRICAL CONTRACTOR.
23. FIRE PROTECTION CONTRACTOR SHALL BE CERTIFIED BY STATE OF VIRGINIA FOR SPRINKLER SYSTEM INSTALLATION.
24. ENTIRE SYSTEM SHALL BE INSTALLED IN ACCORDANCE WITH VA FIRE PROTECTION DESIGN MANUAL - SEVENTH EDITION - SEPTEMBER 2015
25. SPRINKLER SYSTEM TO BE INSTALLED TO ACCOMODATE SYSTEM DRAINAGE. CONTRACTOR TO PROVIDE ALL AUXILIARY DRAINS AS NECCESSARY.
26. CONTRACTOR TO PROVIDE 14-DAT NOTICE TO VA FOR ALL SHUTDOWNS.

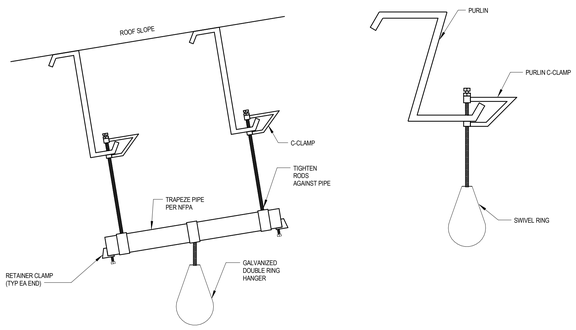

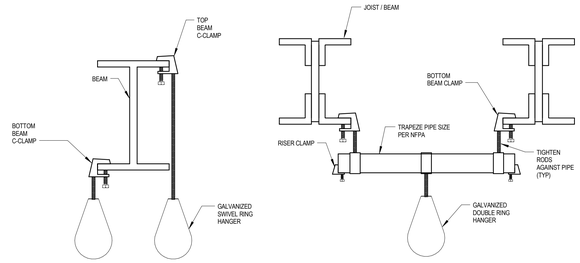

TYPICAL PIPE HANGER DETAIL

NOTE
FIRE PROTECTION CONTRACTOR SHALL INDICATE HANGER TYPE AND LOCATION OF ALL SWAY BRACING AND FLEXIBLE PIPE CONNECTIONS ON SPRINKLER SHOP DRAWINGS. INSTALLATION SHALL BE IN ACCORDANCE WITH NFPA 13

5 SWAY BRACING DETAIL
NTS

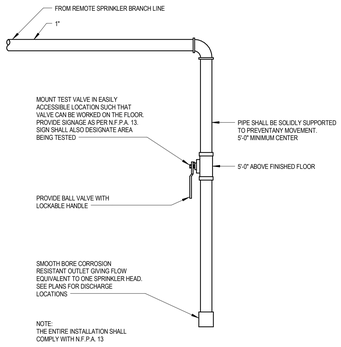

2 SPRINKLER INSPECTOR'S TEST DRAIN DETAIL
NTS

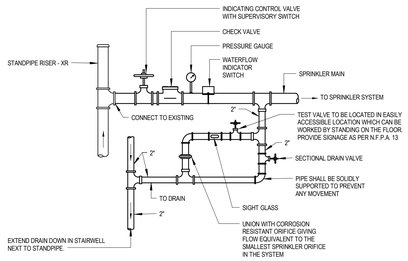

3 STANDPIPE CONNECTION DETAIL
NTS

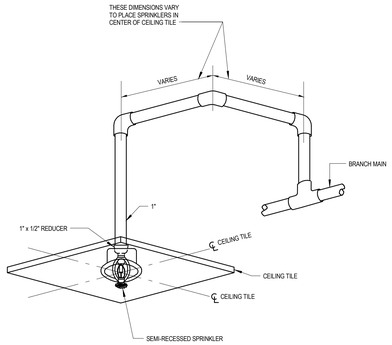

4 TYPICAL SEMI-RECESSED SPRINKLER DETAIL
NTS

PROJECT NORTH

FULLY SPRINKLERED BID DOCUMENTS

Revisions:	Date

CONSULTANTS:

SEAL

COMMONWEALTH OF PENNSYLVANIA — REGISTERED PROFESSIONAL — CHRISTOPHER J. CHAMPAGNE — ENGINEER — PE059201 — 8/28/19

ARCHITECTS/ENGINEERS:

AE WORKS

6587 Hamilton Avenue
Pittsburgh, Pennsylvania 15206
Ph: 412.287.7333 Fax: 412.287.7334
www.ae-works.com

AE Works Project Number: 13030

Drawing Title	FIRE PROTECTION - SYMBOLS, NOTES & DETAILS
Approved: Project Director	
Project Title:	H.H. MCGUIRE VAMC - CONSTRUCT SPINAL CORD ENHANCEMENT CENTER
Location:	1201 Broad Rock Boulevard, Richmond, VA 23249
Date:	09/11/2017
Checked:	MEW
Drawn:	MEW
Project Number	652 - 314
Building Number	500
Drawing Number	F001

Office of Construction and Facilities Management
Department of Veterans Affairs

VA FORM 08-6231

1 FIRE PROTECTION FLOORPLAN- LEVEL ONE
1/8" = 1'-0"

FIRE RATED PARTITION LEGEND

PARTITION TO LIMIT THE TRANSFER OF SMOKE (NO FIRE RATING)

NOTE:

REFER TO ARCHITECTURAL DRAWING A401 DETAIL 2, FOR TYPICAL PATIENT ROOM REFLECTED CEILING LAYOUT. HEAD LAYOUT TO BE TYPICAL PER THIS DETAIL.

2-HOUR FIRE RATED PARTITION

PROJECT NORTH

FULLY SPRINKLERED BID DOCUMENTS

Revisions:	Date

CONSULTANTS:

SEAL

COMMONWEALTH OF PENNSYLVANIA
REGISTERED PROFESSIONAL
CHRISTOPHER J CHAMPAGNE
ENGINEER
PE059280-E
8/19

ARCHITECTS/ENGINEERS:

AE WORKS

6587 Hamilton Avenue
Pittsburgh, Pennsylvania 15206
Ph: 412.287.7333 Fax: 412.287.7334
www.ae-works.com

AE Works Project Number: 13030

Drawing Title
FIRE PROTECTION FLOORPLAN- LEVEL ONE

Approved: Project Director

Project Title:
H.H. MCGUIRE VAMC - CONSTRUCT SPINAL CORD ENHANCEMENT CENTER

Location:
1201 Broad Rock Boulevard, Richmond, VA 23249

Date:	Checked:	Drawn:
09/11/2017	MEW	MEW

Project Number 652 - 314

Building Number 500

Drawing Number F101

Office of Construction and Facilities Management

Department of Veterans Affairs

VA FORM 08-6231