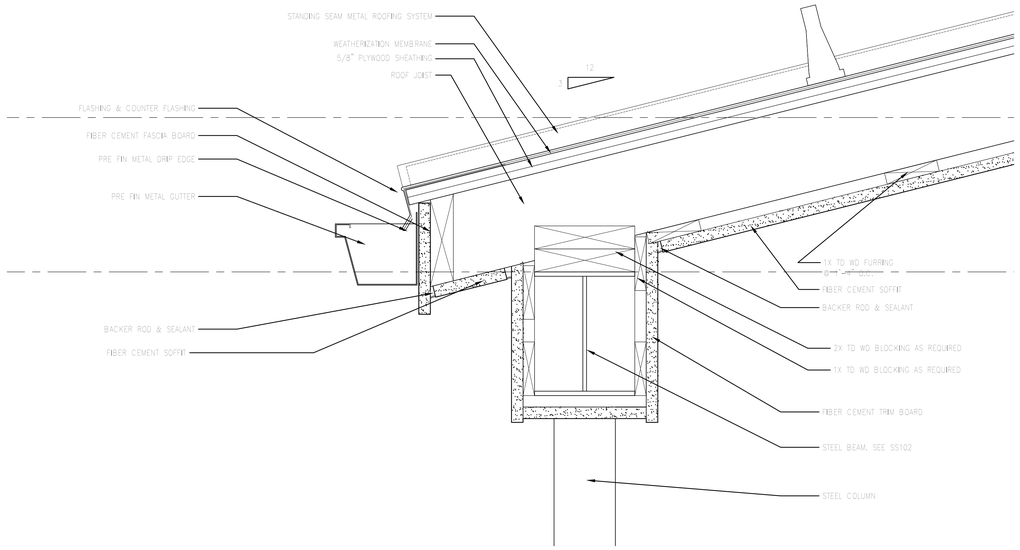

C3 BEAM DETAIL
3/4" = 1'-0"

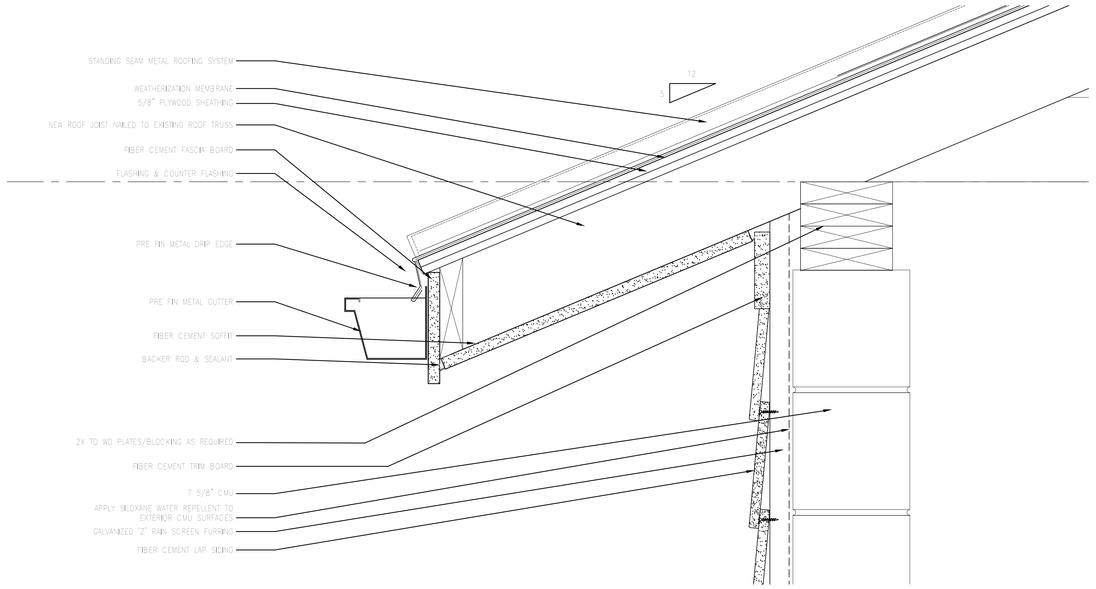

C8 SOFFIT DETAIL
3/4" = 1'-0"

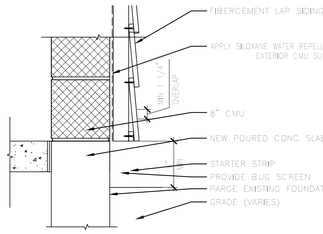

D1 GRADE CLEARANCE
1 1/2" = 1'-0"

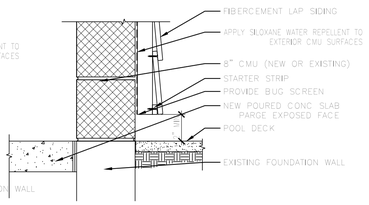

D2 HARDSCAPE
1 1/2" = 1'-0"

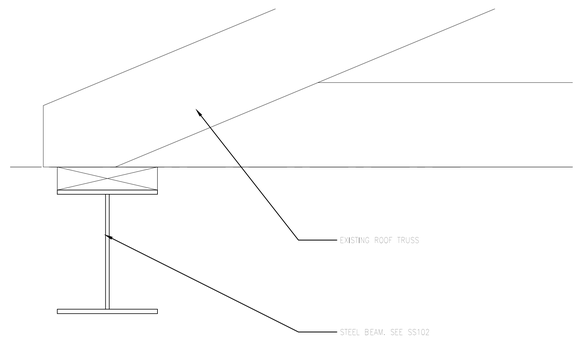

D4 BEAM DETAIL
3/4" = 1'-0"

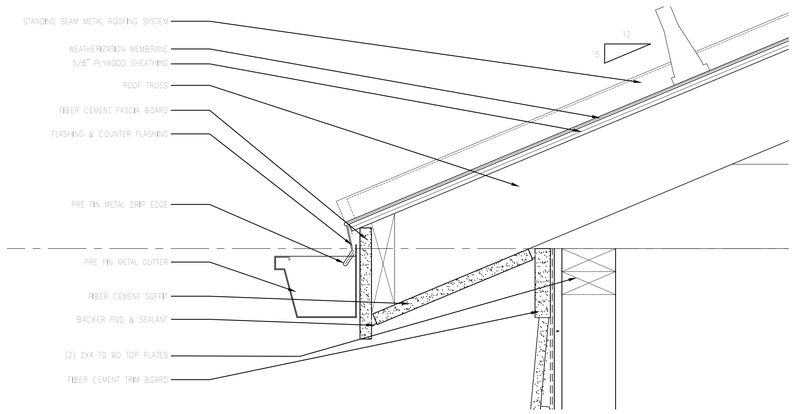

D8 SOFFIT DETAIL
3/4" = 1'-0"

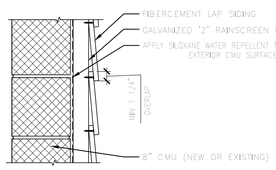

E1 HORIZONTAL LAP VIEW
1 1/2" = 1'-0"

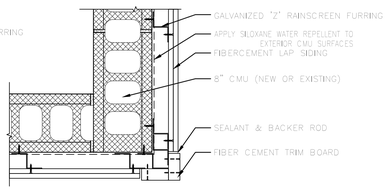

E2 OUTSIDE CORNER
1 1/2" = 1'-0"

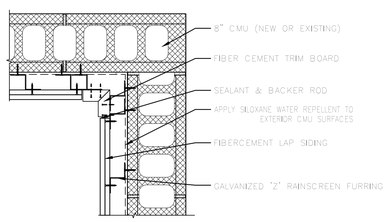

F2 INSIDE CORNER
1 1/2" = 1'-0"

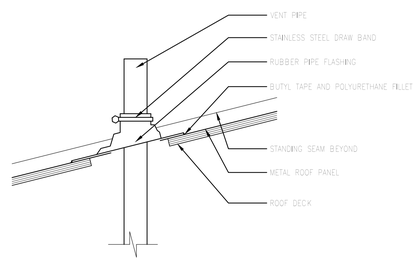

F5 PIPE PENETRATION DETAIL
NOT TO SCALE

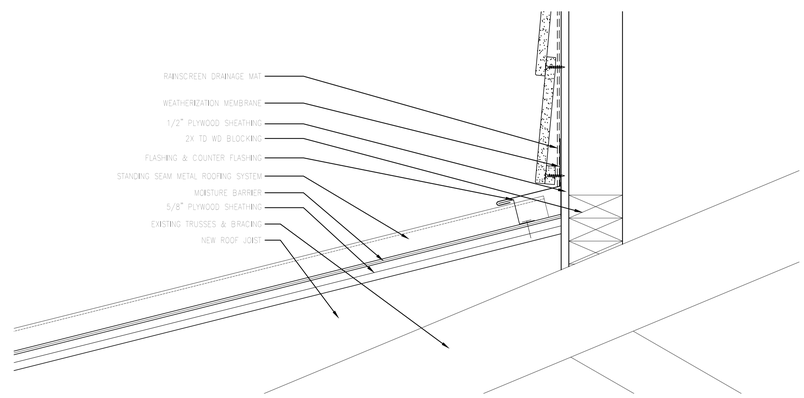

F8 ROOF DETAIL
3/4" = 1'-0"

100% CONSTRUCTION DOCUMENTS

Revisions:	Date

CONSULTANTS:

STATE OF WEST VIRGINIA — MARK D SCHWIN — REGISTERED ARCHITECT

ARCHITECT/ENGINEERS:

SAAarchitects
600 North Hartley Street, Suite 150 York, PA 17404
T 717.843.3200 F 717.699.0205
www.saaarchitects.com

Drawing Title: DETAILS

Approved: Project Director

Project Title: RECREATIONAL POOL FACILITY RENOVATIONS BATH HOUSE

Location: VAMC, MARTINSBURG, WV

Date: 05-14-12 | Checked: DRSD | Drawn: CAP

Project Number: 613-11-140

Building Number: 417

Drawing Number: 417-AS-503

Dwg. 20 of 24

Office of Construction and Facilities Management

Department of Veterans Affairs

VA FORM 08-6231