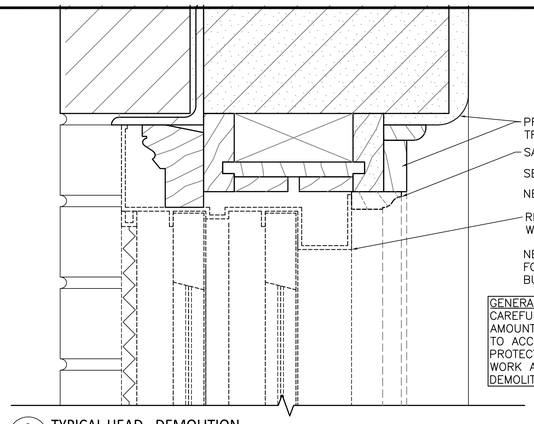

GENERAL DEMOLITION NOTE:
CAREFULLY REMOVE & SALVAGE MINIMUM AMOUNT OF EXISTING HISTORIC CONSTRUCTION TO ACCESS WINDOWS FOR REMOVAL. PROTECT EXISTING ADJACENT PLASTER, TILE–WORK AND WOODWORK FROM DAMAGE DURING DEMOLITION AND LEAD PAINT ABATEMENT.

3 / A-501 — TYPICAL HEAD - DEMOLITION
6" = 1'-0"

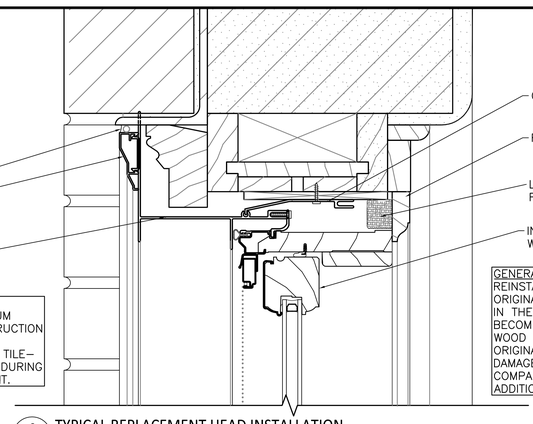

GENERAL INTERIOR TRIM NOTE:
REINSTALL SALVAGED HISTORIC TRIM TO ORIGINAL LOCATION.
IN THE EVENT THAT THE ORIGINAL TRIM BECOMES DAMAGED, SUBMIT NEW PAINTED WOOD TRIM FOR REPLACEMENT. MATCH ORIGINAL PROFILE. SUBMIT SAMPLE OF DAMAGED TRIM FROM EACH LOCATION FOR COMPARISION. PROVIDE NEW TRIM AT NO ADDITIONAL COST TO THE GOVERNMENT.

6 / A-501 — TYPICAL REPLACEMENT HEAD INSTALLATION
1/8" = 1'-0"

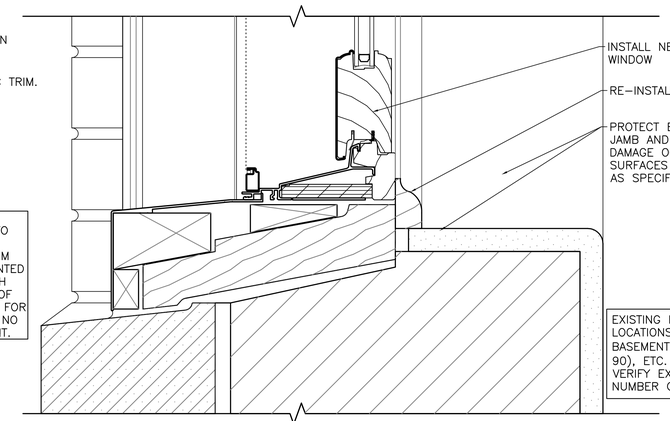

EXISTING PLASTERED SILL AND JAMB LOCATIONS INCLUDE MISCELLANEOUS BASEMENT AREAS, REAR ADDITIONS, (DESK 90), ETC. CONTRACTOR IS RESPONSIBLE TO VERIFY EXTENT, EXISTING PROFILES AND NUMBER OF INSTANCES

9 / A-501 — ALTERNATE PLASTERED / GWB INTERIOR SILL DETAIL: PER LOCATION
6" = 1'-0"

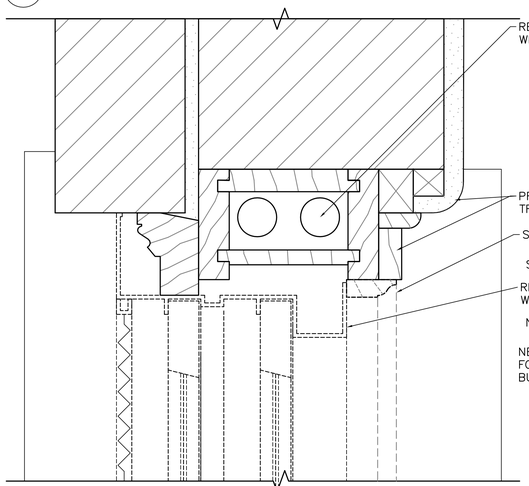

2 / A-501 — TYPICAL JAMB - DEMOLITION
6" = 1'-0"

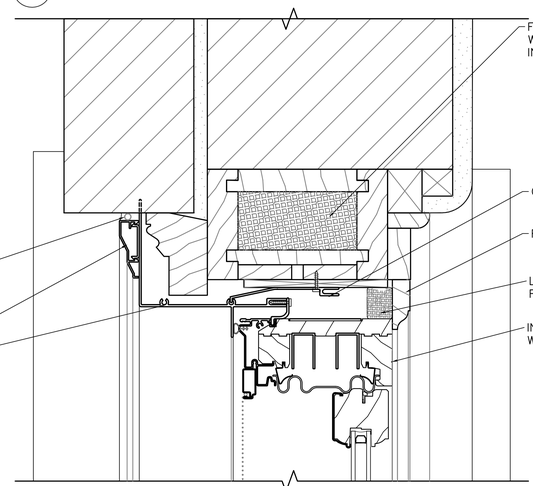

5 / A-501 — TYPICAL REPLACEMENT JAMB INSTALLATION
6" = 1'-0"

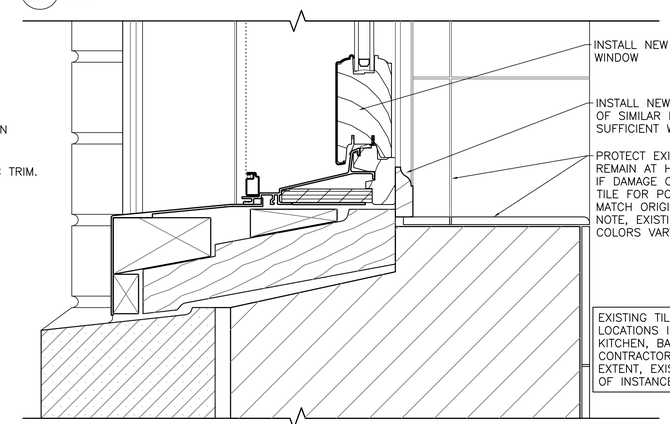

EXISTING TILED SILL AND JAMB DETAIL LOCATIONS INCLUDE TOILET ROOMS, MORGUE, KITCHEN, BASEMENT THERAPY SUITE, ETC. CONTRACTOR IS RESPONSIBLE TO VERIFY EXTENT, EXISTING PROFILES AND NUMBER OF INSTANCES

8 / A-501 — ALTERNATE CERAMIC TILE INTERIOR SILL DETAIL: PER LOCATION
6" = 1'-0"

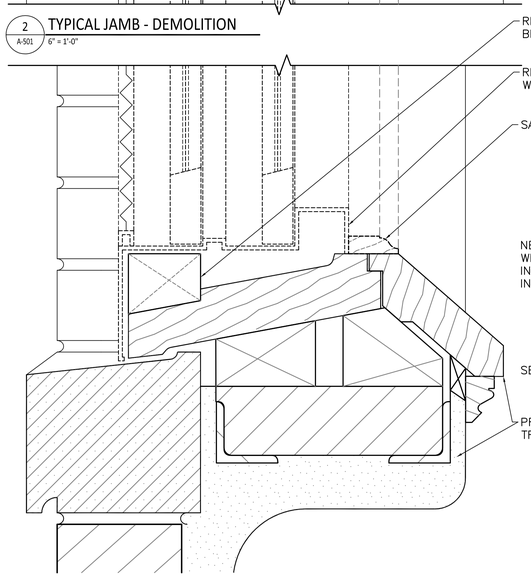

1 / A-501 — TYPICAL SILL - DEMOLITION
6" = 1'-0"

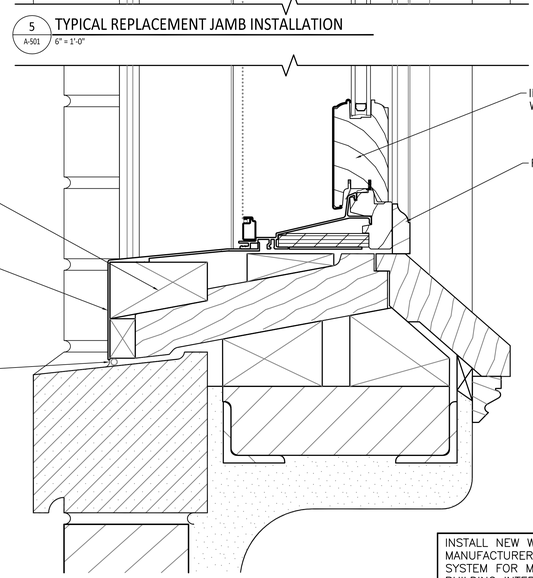

4 / A-501 — TYPICAL REPLACEMENT SILL INSTALLATION
6" = 1'-0"

INSTALL NEW WINDOWS USING MANUFACTURERS STANDARD SUB–FRAME SYSTEM FOR MOUNTING WINDOWS FROM BUILDING INTERIOR. INCLUDE ALL STAINLESS–STEEL CLIPS, ANCHORS AND FASTENERS AND ALL SEALANTS FOR A COMPLETE INSTALLATION AS SPECIFIED.

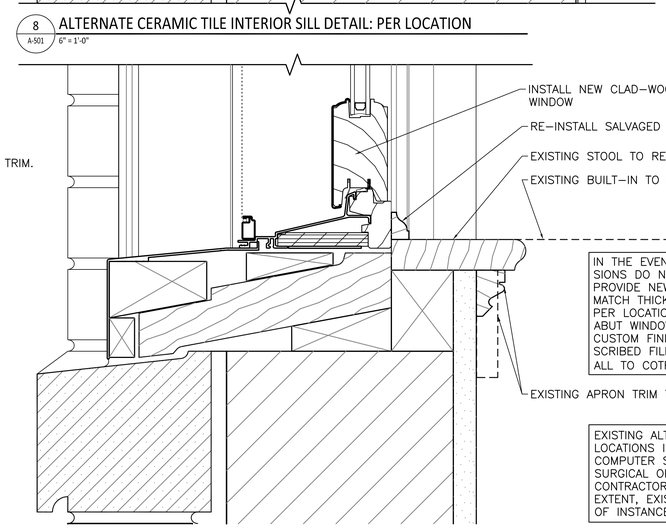

IN THE EVENT THAT EXISTING STOOL DIMEN–SIONS DO NOT FIT NEW WINDOW, ALLOW TO PROVIDE NEW STOOL AND APRON TRIM TO MATCH THICKNESS & PROFILES OF EXISTING PER LOCATION. WHERE BUILT–IN FIXTURES ABUT WINDOW SILL, ALLOW TO PROVIDE CUSTOM FINISHED TRIM OR DUTCHMAN–TYPE SCRIBED FILLER PIECE TO MATCH FIXTURE, ALL TO COTR'S SATISFACTION.

EXISTING ALTERNATE WOOD SILL DETAIL LOCATIONS INCLUDE THIRD–FLOOR COMPUTER SUITE, NORTH ELEVATION SURGICAL OFFICES, ETC. CONTRACTOR RESPONSIBLE TO VERIFY EXTENT, EXISTING PROFILES AND NUMBER OF INSTANCES

7 / A-501 — ALTERNATE INTERIOR WOOD STOOL DETAIL: PER LOCATION
6" = 1'-0"

FINAL FOR CONSTRUCTION

Revisions	Date

ARCHITECT:
BMA ARCHITECTS ■ PLANNERS
103 Wales Street, Rutland VT 05701
Ph: 802.773.8245 Fx: 802.773.8235
210 South Street, Bennington VT 05201
Ph: 802.445.7170 Fx: 802.445.7175
Toll Free: 800.754.9056
www.bma-architects.com

REGISTERED ARCHITECT MARK T. MORRIS No. 2854 STATE OF VERMONT
Professional Seal

Drawing Title	Project Title	Date
WINDOW DETAILS	WRJ VAMC BLDG. 1 WINDOW REPLACEMENT	MAY 02, 2011
Approved: Project Manager	Building Number 1 / Checked / Drawn	Project No. 405–09–114
Approved: Service Chief	Location VAMC, WHITE RIVER JUNCTION V.T.	Drawing No. A-601

VAMC, WHITE RIVER JUNCTION
VA Department of Veterans Affairs

VA FORM 08–6231, OCT 1978

H:\BMA Projects\VA Medical Center Bldg 01 - White River JCT\Sheets\CDs\A-601.dwg, 7/27/2012 1:09:52 PM, 30X42, 1:1