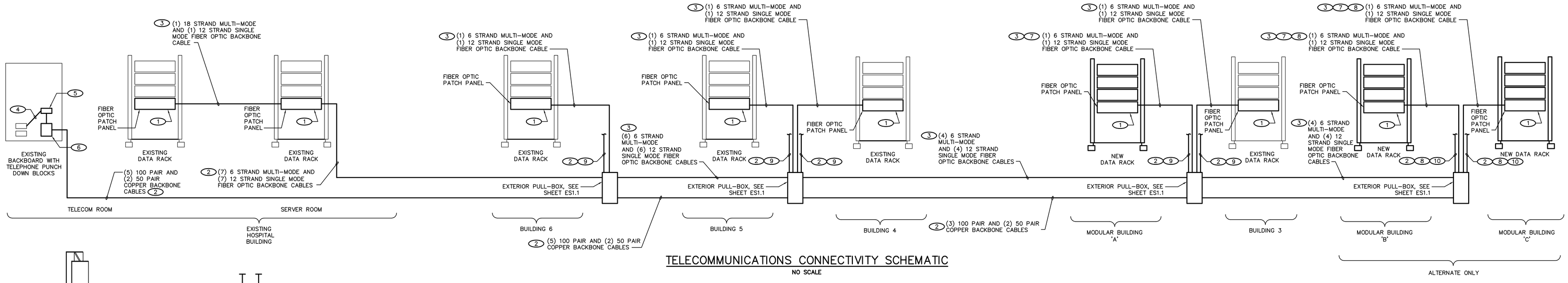

TELECOMMUNICATIONS CONNECTIVITY SCHEMATIC

NO SCALE

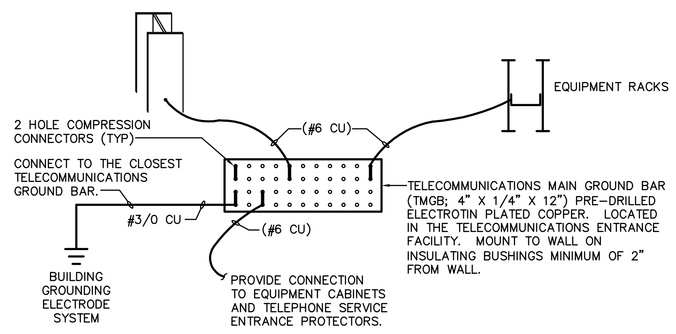

TELECOMMUNICATIONS GROUNDING DETAIL

NO SCALE

THIS DETAIL IS PROVIDED AS SUPPLEMENTARY INFORMATION AND DOES NOT EXCLUDE ANY REQUIREMENTS OF EIA/TIA OR APPLICABLE CODES.

TELECOMMUNICATIONS CONNECTIVITY SCHEMATIC KEYNOTES (⬭)

1. PROVIDE NEW FIBER OPTIC PATCH PANELS AT EXISTING AND/OR NEW DATA RACK FOR TERMINATION OF NEW FIBER OPTIC CABLE.
2. COPPER BACKBONE CABLES SHALL BE INSTALLED WITHIN NEW CONDUITS. SEE SHEET ES1.1 FOR ADDITIONAL INFORMATION.
3. FIBER BACKBONE CABLES SHALL BE INSTALLED WITHIN INNERDUCT LOCATED IN NEW CONDUIT. SEE SHEET ES1.1 FOR ADDITIONAL INFORMATION.
4. PROVIDE CROSS CONNECTS FOR CONNECTING TO EXISTING TELEPHONE LINES AND NEW BACKBONE CABLES.
5. PROVIDE NEW 110 STYLE BLOCKS AT THE EXISTING TELEPHONE SERVICE BACKBOARD FOR TERMINATION OF NEW CABLES.
6. SERVICE ENTRANCE PROTECTOR TERMINALS SHALL BE SYSTIMAX OR EQUAL 195 TYPE FOR 100 PAIR CABLES WITH 26 GAUGE STUB THAT SERVES AS FUSIBLE LINK. PROVIDE QUANTITY AS REQUIRED FOR ALL INCOMING PAIRS. PROVIDE SOLID STATE PLUG-IN PROTECTOR UNITS FOR EACH PAIR TERMINATED. PROVIDE ALL SPLICES AND CONNECTOR FOR CONNECTION TO THE SERVICE CABLES AND THE CROSS CONNECTING BLOCKS.
7. MODULAR BUILDINGS INSTALLED UNDER PHASE 3. COORDINATE INSTALLATION OF CABLING FOR MODULAR BUILDINGS WITH PHASE 3 PROJECT.
8. INSTALL UNDER ALTERNATE ONLY. UNDER BASE BID PROVIDE COIL OF SUFFICIENT LENGTH IN PULL BOX FOR FUTURE CONNECTION.
9. (1) 100 PAIR CABLE TO TELEPHONE TERMINATION BOARD. PROVIDE NEW 110 STYLE BLOCKS AT THE EXISTING AND/OR NEW TELEPHONE SERVICE BACKBOARD FOR TERMINATION OF NEW CABLES.
10. (1) 50 PAIR CABLE TO TELEPHONE TERMINATION BOARD. PROVIDE 110 STYLE BLOCKS AT THE TELEPHONE SERVICE BACKBOARD FOR TERMINATION OF NEW CABLES.

TELECOMMUNICATIONS CONNECTIVITY SCHEMATIC GENERAL NOTES

A. ALL CABLES AND EQUIPMENT SHOWN SHALL BE CONTRACTOR FURNISHED AND INSTALLED UNLESS NOTED OTHERWISE.

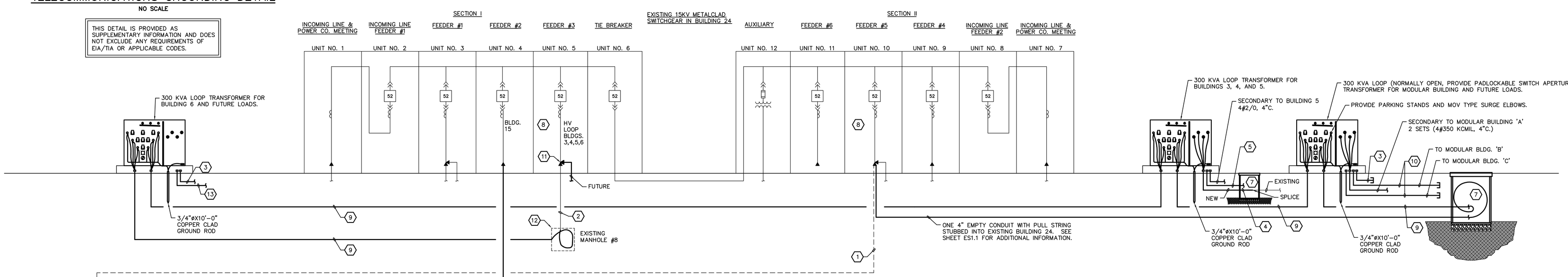

HIGH VOLTAGE RISER DIAGRAM

NO SCALE

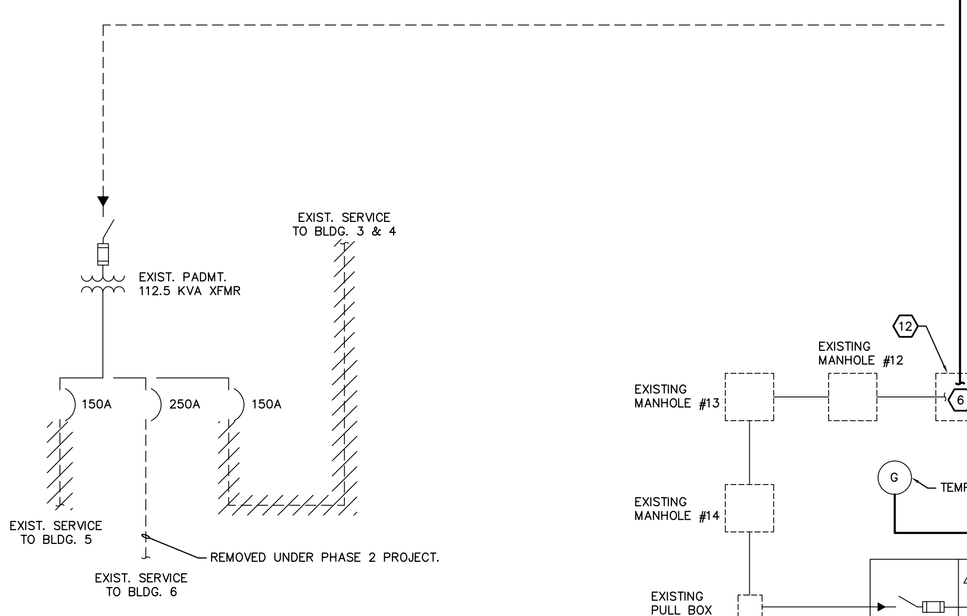

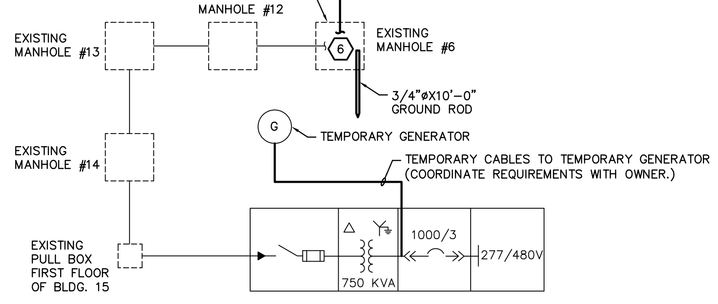

EXISTING UNIT SUBSTATION IN BLDG. 15 LOCATED ON SECOND FLOOR

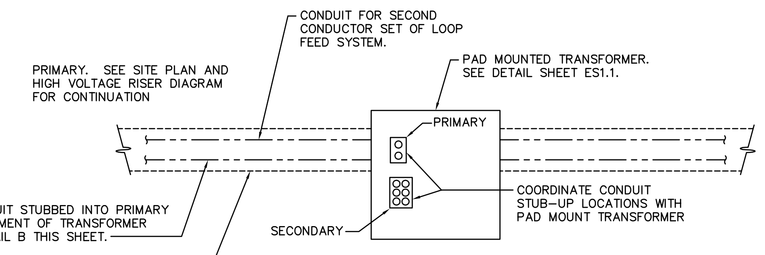

DETAIL A (PLAN VIEW)

NO SCALE

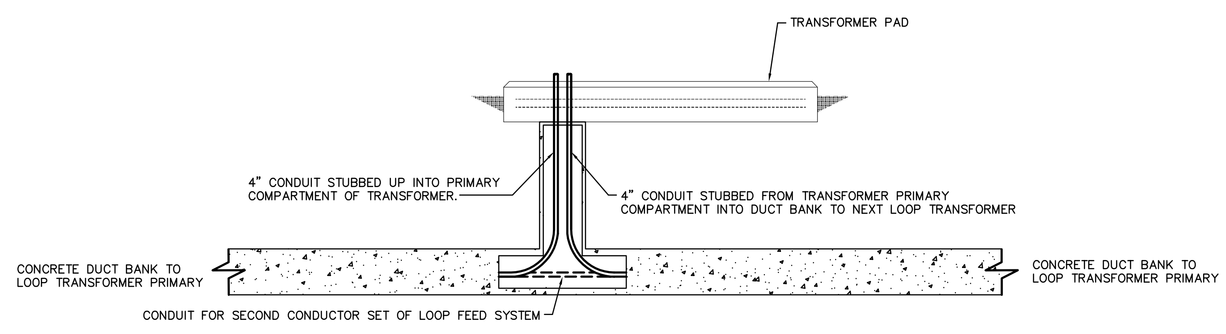

DETAIL B (ELEVATION)

NO SCALE

ELECTRICAL KEYNOTES: (⬡)

1. UNDER PHASE 2 PROJECT THE HIGH VOLTAGE FEEDER TO BUILDING 6 WILL BE REMOVED.
2. PROVIDE 3-1/C #4/0, 15KV, SHIELDED CU, 133% EPR INSULATION AND 1#2 600V GRD., IN EXISTING 4" CONDUIT TO EXISTING MANHOLE #8.
3. STUB OUT ONE 4" EMPTY CONDUIT WITH PULL STRING FROM TRANSFORMER PAD AND CAP FOR FUTURE. SEE SHEET ES1.1 FOR ADDITIONAL INFORMATION.
4. PROVIDE NEW 4#250KCMIL, 4"C TO NEW PULL BOX. INTERCEPT EXISTING FEEDER UNDERGROUND VIA PULL BOX AND SPICE CABLES AS REQUIRED TO RE-FEED BUILDINGS 4 AND 3. FIELD VERIFY SIZE OF EXISTING CONDUCTORS. NEW CONDUCTORS TO MATCH EXISTING. SEE SHEET 'ES1.1' FOR ADDITIONAL INFORMATION.
5. PROVIDE ONE 4" EMPTY CONDUIT WITH PULL STRING FROM TRANSFORMER PAD INTO NEW PULL BOX FOR FUTURE. SEE SHEET ES1.1 FOR ADDITIONAL INFORMATION.
6. PROVIDE NEW FEEDER (3-1/C #2/0, 15KV, SHIELDED CU, 133%EPR INSULATION, 1#2 600V GRD., IN EXISTING 4" C.) FROM BAY 4 TO EXISTING MANHOLE #6. SPLICE NEW CONDUCTORS TO EXISTING CONDUCTORS IN EXISTING MANHOLE #6. EXISTING CONDUCTORS BELIEVED TO BE 3#2/0, 15KV XLPE. CONTRACTOR TO FIELD VERIFY. SEE SHEET 'ES1.1' FOR ADDITIONAL INFORMATION.
7. NEW PULL BOX. SEE SHEET 'ES1.1' FOR ADDITIONAL INFORMATION.
8. PROVIDE NEW LOAD IDENTIFICATION PLAQUES AS REQUIRED.
9. PROVIDE 3-1/C #4/0, 15KV, SHIELDED CU, 133% EPR INSULATION AND 1#2 600V GRD. IN 4" CONDUIT.
10. UNDER BASE BID STUB TWO 4" EMPTY CONDUITS WITH PULL STRING AND CAP FOR FUTURE MODULAR BUILDINGS. UNDER ALTERNATE FOR MODULAR BUILDING 'B' PROVIDE 2 SETS (4#350KCMIL, 4"C.) TO SERVICE POINT. VERIFY LOCATION WITH MODULAR BUILDING SUPPLIER. UNDER ALTERNATE FOR MODULAR BUILDING 'C' PROVIDE 2 SETS (4#350KCMIL, 4"C.) TO SERVICE POINT. VERIFY LOCATION WITH MODULAR BUILDING SUPPLIER.
11. PROVIDE DUAL TERMINATION FOR UTILITY CORRIDOR LOOP AND FUTURE LOAD. FIELD VERIFY TERMINATION REQUIREMENTS.
12. CORE DRILL NEW OPENINGS INTO MANHOLE AS REQUIRED AND PROVIDE 'LINK-SEAL' OR EQUAL AT ALL MANHOLE PENETRATIONS. PROVIDE CABLE SUPPORTS AS REQUIRED.
13. PROVIDE ONE 4" EMPTY CONDUIT WITH PULL STRING FROM TRANSFORMER SECONDARY COMPARTMENT STUBBED INTO BASEMENT OF BUILDING 6 FOR SECONDARY PROVIDED UNDER PHASE 2 PROJECT.

Revisions	Date

FARRIS ENGINEERING CONSULTING ENGINEERS
•OMAHA, NE. •COLORADO SPRINGS, CO. •LINCOLN, NE. •DES MOINES, IA.

COPYRIGHT 092001
This document and the information contained may not be reproduced or excerpted from without the express written permission of Farris Engineering, Inc. Unauthorized copying, disclosure or construction use are prohibited by the copyright law.

CLH Calvin L. Hinz Architects, PC

Calvin L. Hinz Architects, P.C. CLH 2007-37
3705 North 200th Street
Elkhorn, Nebraska 68022
Phone:402.291.6941 Fax: 402.291.9193

Farris Engineering
11239 Chicago Circle
Omaha, Nebraska 68154
402.330.5900 402.330.5902

United Engineering
20507 Nicholas Circle, Suite 108
Elkhorn, Nebraska 68022
402.763.9475 402.763.9527

Kenneth D. Lathrum & Associates, P.C.
1901 N. 61st Street
Omaha, Nebraska 68114
402.391.5861

HIGH VOLTAGE RISER DIAGRAM

UTILITY CORRIDOR UPGRADE

VAMC Omaha, NE

Date	Checked by	Drawn by
FEBRUARY 24, 2009	KMA	KMA

Project Number: 636-07-134 Phase One
Building Number: West Utility Corridor
Drawing Number: E1.1
Dwg. 5 of 5

CLH 2008-18

Office of Construction and Facilities Management
Department of Veterans Affairs

VA FORM 08-6231