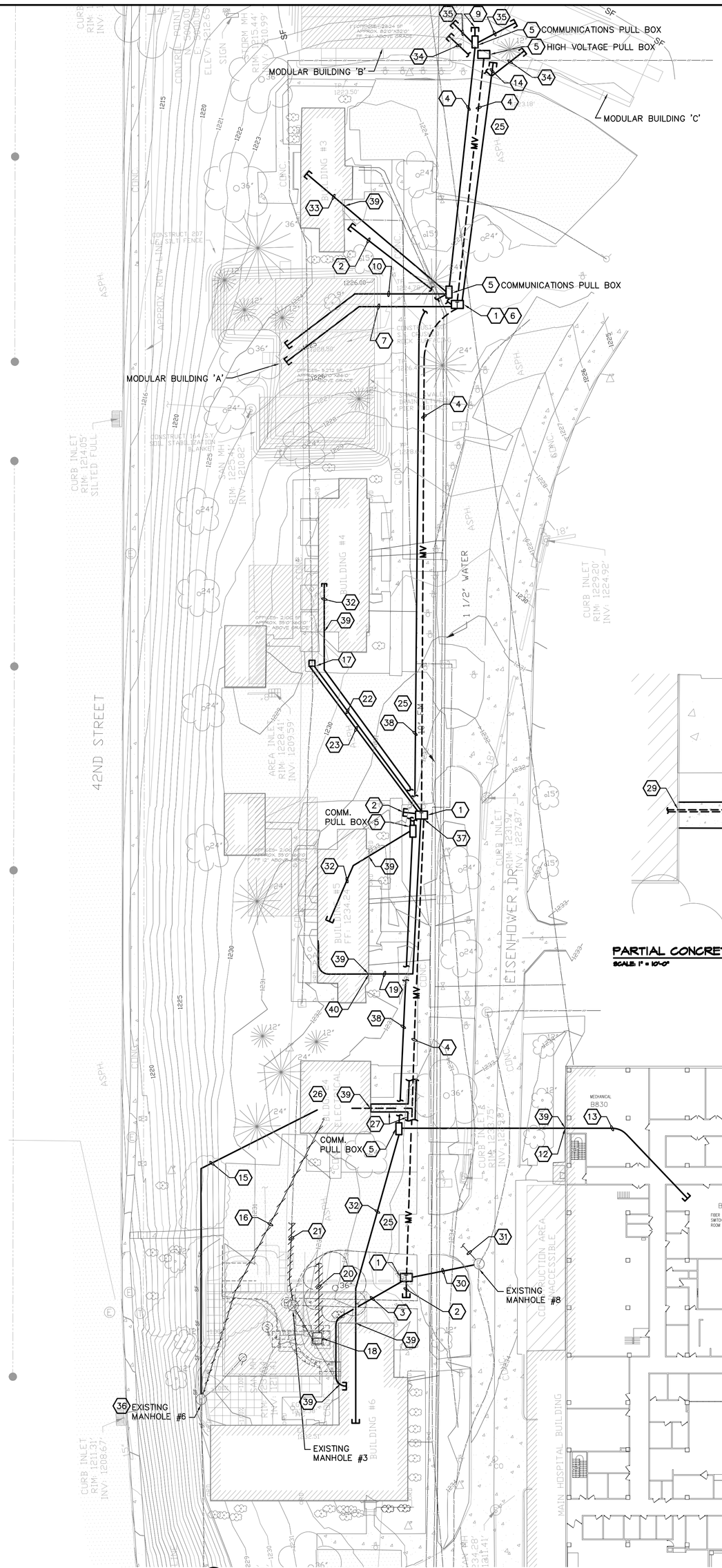

1 ELECTRICAL SITE UTILITIES PLAN

SCALE 1" = 80'-0"

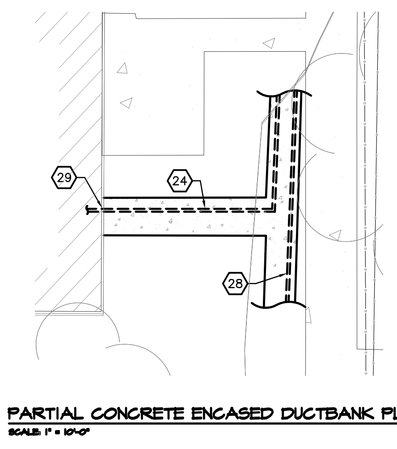

PARTIAL CONCRETE ENCASED DUCTBANK PLAN

SCALE 1" = 10'-0"

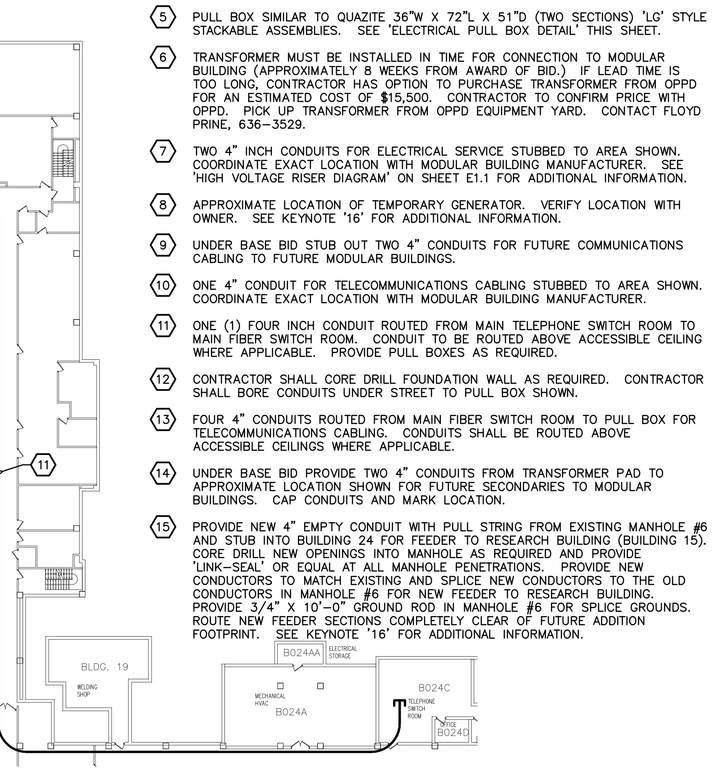

BASEMENT LEVEL OF MAIN HOSPITAL

SCALE 1" = 20'-0"

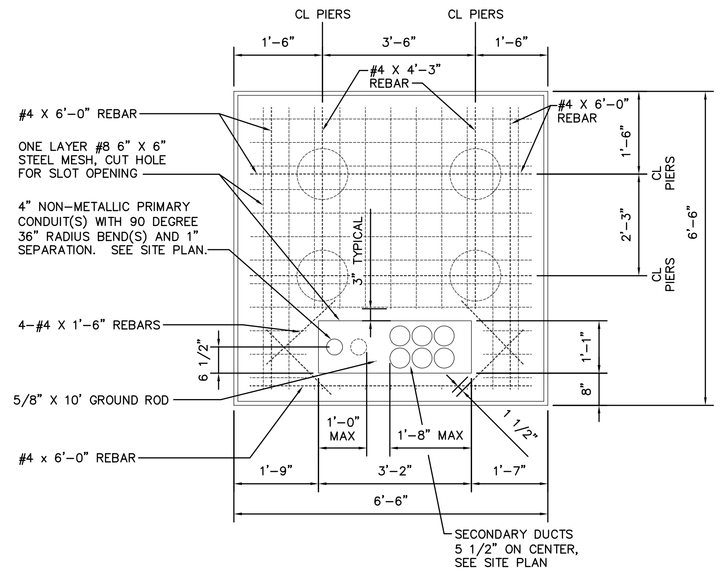

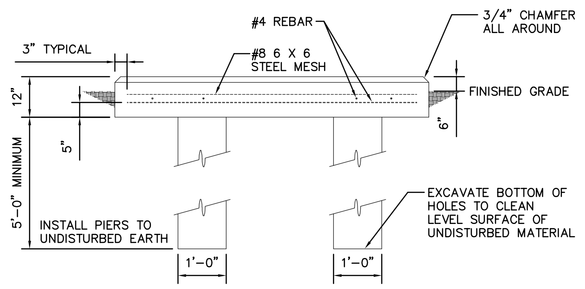

NOTES:

1. THOROUGHLY COMPACT THE TOP ONE (1) FOOT OF SUBGRADE BENEATH THE SLAB TO 90% OF MAXIMUM DENSITY PER ASTM D698.
2. IF THE TOP THREE (3) FEET OF SUBGRADE BENEATH THE SLAB IS SUSCEPTIBLE TO A HIGH WATER TABLE OR PERIODIC SATURATION, EXCAVATE THE EXISTING SOIL AND BACKFILL WITH CLEAN SAND OR GRAVEL. THOROUGHLY COMPACT BACKFILL TO 90% OF MAXIMUM DENSITY PER ASTM D2049 AND D1556.
3. CONCRETE SHALL BE SG-6 WITH MINIMUM 28 DAY STRENGTH OF 3,000 PSI.
4. MAKE TOP OF SLAB SMOOTH, FLAT, AND LEVEL.
5. VERIFY CLEARANCES TO WALLS, STRUCTURES, AND CANOPIES WITH UTILITY PRIOR TO FORMING.
6. ROD AND PROVE CLEAR PRIMARY CONDUIT(S), INSTALL A PULL STRING IN EACH PRIMARY CONDUIT(S).
7. INSTALL CONDUITS ENTERING SLAB VERTICAL AND AT 90 DEGREE ANGLE WITH TOP OF SLAB.
8. CONDUITS SHALL NOT BE INSTALLED IN CONCRETE WITHIN SLOT.
9. CALL FOR UTILITY INSPECTION OF TRANSFORMER SLAB.

3Ø PADMOUNT TRANSFORMER SLAB DETAIL

NO SCALE

ELECTRICAL KEYNOTES: (⟨⟩)

(1) PROVIDE 300 KVA LIVE-FRONT LOOP-FEED OIL-FILLED TRANSFORMER:
PRIMARY: 13,800V, 3ø, DELTA
SECONDARY: 208/120V, 3ø, GROUNDED WYE
SEE TRANSFORMER SPECIFICATIONS. PROVIDE TRANSFORMER PAD PER TRANSFORMER SLAB DETAIL ON THIS SHEET.

(2) STUB OUT ONE 4" CONDUIT FROM TRANSFORMER PAD FOR FUTURE RENOVATION AND/OR FUTURE BUILDING.

(3) PROVIDE TWO 4" CONDUITS FROM TRANSFORMER SECONDARY COMPARTMENT STUBBED INTO BASEMENT OF BUILDING 6 FOR NEW SECONDARY PROVIDED UNDER PHASE 2 PROJECT..

(4) PROVIDE TWO 4" PVC SCHEDULE 40 CONDUITS INSTALLED PER DUCT BANK DETAIL ON SHEET E1.1.

(5) PULL BOX SIMILAR TO QUAZITE 36"W X 72"L X 51"D (TWO SECTIONS) 'LG' STYLE STACKABLE ASSEMBLIES. SEE 'ELECTRICAL PULL BOX DETAIL' THIS SHEET.

(6) TRANSFORMER MUST BE INSTALLED IN TIME FOR CONNECTION TO MODULAR BUILDING (APPROXIMATELY 8 WEEKS FROM AWARD OF BID.) IF LEAD TIME IS TOO LONG, CONTRACTOR HAS OPTION TO PURCHASE TRANSFORMER FROM OPPD FOR AN ESTIMATED COST OF $15,500. CONTRACTOR TO CONFIRM PRICE WITH OPPD. PICK UP TRANSFORMER FROM OPPD EQUIPMENT YARD. CONTACT FLOYD PRINE, 636-3529.

(7) TWO 4" INCH CONDUITS FOR ELECTRICAL SERVICE STUBBED TO AREA SHOWN. COORDINATE EXACT LOCATION WITH MODULAR BUILDING MANUFACTURER. SEE 'HIGH VOLTAGE RISER DIAGRAM' ON SHEET E1.1 FOR ADDITIONAL INFORMATION.

(8) APPROXIMATE LOCATION OF TEMPORARY GENERATOR. VERIFY LOCATION WITH OWNER. SEE KEYNOTE '16' FOR ADDITIONAL INFORMATION.

(9) UNDER BASE BID STUB OUT TWO 4" CONDUITS FOR FUTURE COMMUNICATIONS CABLING TO FUTURE MODULAR BUILDINGS.

(10) ONE 4" CONDUIT FOR TELECOMMUNICATIONS CABLING STUBBED TO AREA SHOWN. COORDINATE EXACT LOCATION WITH MODULAR BUILDING MANUFACTURER.

(11) ONE (1) FOUR INCH CONDUIT ROUTED FROM MAIN TELEPHONE SWITCH ROOM TO MAIN FIBER SWITCH ROOM. CONDUIT TO BE ROUTED ABOVE ACCESSIBLE CEILING WHERE APPLICABLE. PROVIDE PULL BOXES AS REQUIRED.

(12) CONTRACTOR SHALL CORE DRILL FOUNDATION WALL AS REQUIRED. CONTRACTOR SHALL BORE CONDUITS UNDER STREET TO PULL BOX SHOWN.

(13) FOUR 4" CONDUITS ROUTED FROM MAIN FIBER SWITCH ROOM TO PULL BOX FOR TELECOMMUNICATIONS CABLING. CONDUITS SHALL BE ROUTED ABOVE ACCESSIBLE CEILINGS WHERE APPLICABLE.

(14) UNDER BASE BID PROVIDE TWO 4" CONDUITS FROM TRANSFORMER PAD TO APPROXIMATE LOCATION SHOWN FOR FUTURE SECONDARIES TO MODULAR BUILDINGS. CAP CONDUITS AND MARK LOCATION.

(15) PROVIDE NEW 4" EMPTY CONDUIT WITH PULL STRING FROM EXISTING MANHOLE #6 AND STUB INTO BUILDING 24 FOR FEEDER TO RESEARCH BUILDING (BUILDING 15). CORE DRILL NEW OPENINGS INTO MANHOLE AS REQUIRED AND PROVIDE 'LINK-SEAL' OR EQUAL AT ALL MANHOLE PENETRATIONS. PROVIDE NEW CONDUCTORS TO MATCH EXISTING AND SPLICE NEW CONDUCTORS TO THE OLD CONDUCTORS IN MANHOLE #6 FOR NEW FEEDER TO RESEARCH BUILDING. PROVIDE 3/4" X 10'-0" GROUND ROD IN MANHOLE #6 FOR SPLICE GROUNDS. ROUTE NEW FEEDER SECTIONS COMPLETELY CLEAR OF FUTURE ADDITION FOOTPRINT. SEE KEYNOTE '16' FOR ADDITIONAL INFORMATION.

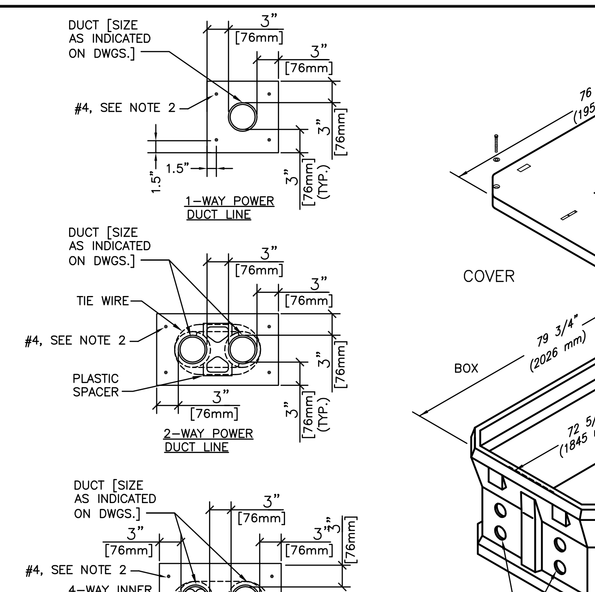

DUCT BANK NOTES:

1. CONCRETE SHALL BE 3000 P.S.I. @ 28 DAYS, OR AS SPECIFIED.
2. PROVIDE REINFORCING RODS ON TOP OF DUCTS WHEN CROSSING OR PLACED IN ROADWAYS.
3. MINIMUM COVER TO TOP OF ENVELOPE SHALL BE 24" [610mm].
4. NON-FERROUS TIE WIRES TO BE IMBEDDED IN DUCT BED CONCRETE.
5. INNERDUCT QUANTITY AND SIZE AS INDICATED ON PLANS.

DUCT BANK DETAILS

NO SCALE

(16) EXISTING FEEDER TO RESEARCH BUILDING (BUILDING 15) TO BE PARTIALLY REMOVED FROM BUILDING 25 TO MANHOLE #6 DUE TO FUTURE ADDITION OF BUILDING 6. COORDINATE PARTIAL REMOVAL OF EXISTING FEEDER AND INSTALLATION OF NEW FEEDER (SEE KEYNOTE '15') AS REQUIRED TO MINIMIZE POWER OUTAGES. ALL INTERRUPTIONS OF POWER SHALL BE SCHEDULED WITH AND APPROVED BY THE OWNER PRIOR TO STARTING WORK. PROVIDE TEMPORARY 500KW GENERATOR TO MAINTAIN POWER TO RESEARCH BUILDING (BUILDING #15) UNTIL CUT OVER FROM EXISTING FEEDER TO NEW FEEDER HAS BEEN COMPLETED IN MANHOLE #6. COORDINATE REQUIREMENTS WITH OWNER. SEE 'BUILDING 15 LOCATION' THIS SHEET.

(17) INTERCEPT EXISTING FEEDER AND INSTALL 36"W X 36"L X 30"D PULL BOX WITH OPEN BOTTOM AND 6" GRAVEL SUB BASE. PULL BOX SHALL BE QUAZITE OR EQUAL PG3636BA24 WITH PG3636HA00 TWO BOLT COVER AND "HIGH VOLTAGE" LOGO. SPLICE EXISTING CABLES TO NEW UNDERGROUND CABLES. SEE KEYNOTE '22'.

(18) EXISTING TRANSFORMER SERVING BUILDINGS 6, 5, 4, AND 3 BEING REMOVED UNDER PHASE 2 PROJECT. COORDINATE EXISTING FEEDER REMOVALS WITH WORK OF PHASE 2 PROJECT TO MINIMIZE POWER OUTAGES.

(19) NEW UNDERGROUND SECONDARY TO RE-FEED BUILDING 5. CORE DRILL EXISTING FOUNDATION WALL AS NECESSARY TO RE-FEED EXISTING MAIN DISTRIBUTION PANEL. SEE KEYNOTE '20' FOR ADDITIONAL INFORMATION.

(20) CONTRACTOR SHALL FIELD VERIFY EXACT LOCATION OF EXISTING UNDERGROUND SECONDARY FEEDING BUILDING 5. REMOVE EXISTING CABLES AND ABANDON UNDERGROUND CONDUIT IN PLACE. COORDINATE REMOVAL OF EXISTING FEEDER AND INSTALLATION OF NEW FEEDER (SEE KEYNOTE '19') AS REQUIRED TO MINIMIZE POWER OUTAGES. ALL INTERRUPTIONS OF POWER SHALL BE SCHEDULED WITH AND APPROVED BY THE OWNER PRIOR TO STARTING WORK.

(21) CONTRACTOR SHALL FIELD VERIFY EXACT LOCATION OF EXISTING UNDERGROUND SECONDARY FEEDING BUILDINGS 3 AND 4. REMOVE EXISTING CABLES AND ABANDON UNDERGROUND CONDUIT IN PLACE. COORDINATE REMOVAL OF EXISTING FEEDER AND INSTALLATION OF NEW FEEDER (SEE KEYNOTE '22') AS REQUIRED TO MINIMIZE POWER OUTAGES. ALL INTERRUPTIONS OF POWER SHALL BE SCHEDULED WITH AND APPROVED BY THE OWNER PRIOR TO STARTING WORK.

(22) NEW UNDERGROUND SECONDARY TO RE-FEED BUILDINGS 3 AND 4. SEE KEYNOTES '17', '21', AND 'MEDIUM VOLTAGE RISER DIAGRAM' ON SHEET E1.1 FOR ADDITIONAL REQUIREMENTS.

(23) PROVIDE ONE 4" EMPTY PVC CONDUIT WITH PULL STRING FROM TRANSFORMER TO PULL BOX FOR FUTURE BUILDING FEEDER.

(24) EMPTY 4" CONDUIT STUBBED FROM BAY 5 OF EXISTING 15KV SWITCHGEAR IN BUILDING 24 TO NORTH 'MEDIUM VOLTAGE' PULL BOX. SEE 'MEDIUM VOLTAGE RISER DIAGRAM' ON SHEET E1.1 FOR ADDITIONAL INFORMATION. CONDUIT INSTALLED PER POWER DUCT BANK DETAIL ON SHEET E1.1. REFER TO KEYNOTE '29' FOR ADDITIONAL INFORMATION.

(25) SAWCUT AND REMOVE EXISTING ASPHALT PAVEMENT AND CURB ONLY AS WIDE AS NECESSARY FOR THE INSTALLATION OF NEW DUCT BANKS. PROVIDE ASPHALT PATCH AS REQUIRED. COORDINATE EXACT REQUIREMENTS WITH OWNER.

(26) SEE 'MEDIUM VOLTAGE RISER DIAGRAM' SHEET E1.1 FOR ADDITIONAL INFORMATION.

(27) SEE 'PARTIAL CONCRETE ENCASED DUCT BANK PLAN' THIS SHEET FOR CLARIFICATION OF CONDUIT LOCATIONS. DUCT BANK NOT SHOWN TO SCALE. SEE DUCT BANK DETAIL ON SHEET E1.1.

(28) PRIMARY MEDIUM VOLTAGE CABLE IN 4" CONDUITS TO TRANSFORMERS.

(29) CONCRETE ENCASED DUCTBANK TO EXTEND TO BUILDING FOUNDATION WALL ONLY. CORE DRILL FOUNDATION WALL AND FLOOR SLAB AS REQUIRED TO STUB EMPTY 4" CONDUIT ABOVE FLOOR. CAP CONDUIT FOR FUTURE.

(30) PROVIDE ONE 4" EMPTY CONDUIT FROM EXISTING MANHOLE #8 TO TRANSFORMER.

(31) EXISTING EMPTY 4" CONDUIT TO SPARE BAY 5 OF EXISTING 15KV SWITCHGEAR IN BUILDING 24. SEE 'MEDIUM VOLTAGE RISER DIAGRAM' ON SHEET E1.1 FOR ADDITIONAL REQUIREMENTS.

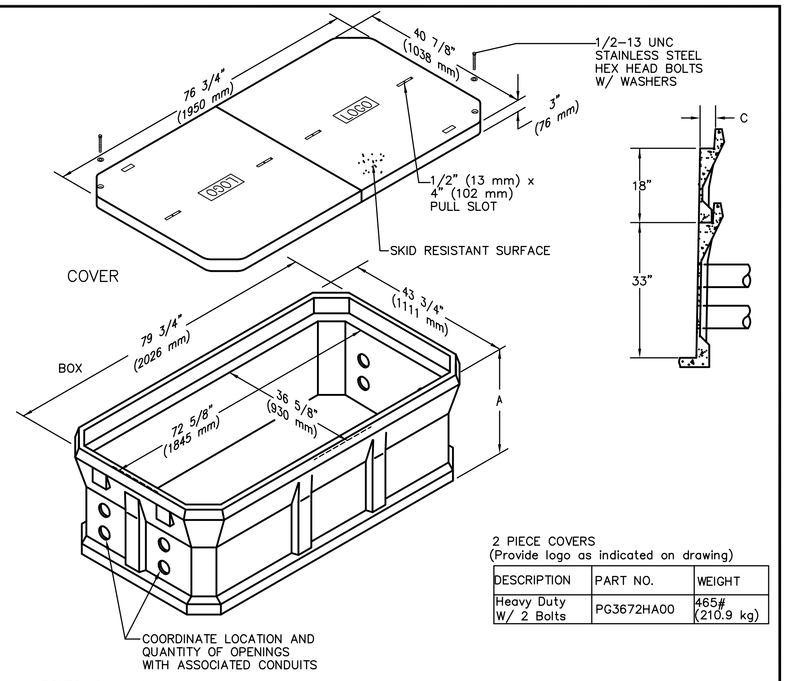

2 PIECE COVERS
(Provide logo as indicated on drawing)

DESCRIPTION	PART NO.	WEIGHT
Heavy Duty W/ 2 Bolts	PG3672HA00	465# (210.9 kg)

BOXES (Stackable)

DESCRIPTION	PART NO.	WEIGHT	DIMENSIONS A	B	C
W/ No Base, (Top Section)	LG3672BA21	256# (116.1 kg)	21" (533 mm)	18" (457 mm)	2 1/4" (57 mm)
W/ No Base, (Bottom Section)	LG3672DA36	483# (219.1 kg)	36 1/2" (927 mm)	33" (838 mm)	N/A

Dimensions in parenthesis are metric equivalent.

36" X 72" "LG" Style (Stackable) Assembly

ELECTRICAL PULL BOX DETAIL

NO SCALE

GENERAL ELECTRICAL NOTES

A. UTILITY LOCATIONS, STREETS, SIDEWALKS, LANDSCAPING, ETC. WERE OBTAINED FROM AVAILABLE FIELD SURVEY INFORMATION. THE DRAWINGS ARE NO GUARANTEE THAT THE UNDERGROUND UTILITIES SHOWN COMPRISE ALL SUCH UTILITIES IN THE AREA EITHER IN SERVICE OR ABANDONED. UNDERGROUND UTILITIES HAVE NOT BEEN PHYSICALLY LOCATED. MINOR DEVIATIONS SHOULD BE ALLOWED FOR AND ALL UTILITIES SHALL BE VERIFIED BY THE CONTRACTOR PRIOR TO ACTUAL TRENCH EXCAVATION.

B. ALL EXISTING UTILITIES SHALL REMAIN IN SERVICE, UNLESS NOTED OTHERWISE, DURING WORK OF THIS CONTRACT.

C. DAMAGE TO CONCRETE SIDEWALKS DUE TO CONSTRUCTION SHALL BE REPAIRED AT COMPLETION OF PROJECT.

D. REMOVE AND REPLACE EXISTING SIGNS AS REQUIRED FOR INSTALLATION OF NEW CONDUITS/DUCTBANKS.

(32) PROVIDE TWO 4" CONDUITS FROM PULL BOX TO EXISTING TELECOMMUNICATIONS ROOM. CORE DRILL FOUNDATION WALL AS REQUIRED, ROUTE CONDUITS IN CRAWL SPACE, THEN CORE DRILL FLOOR OF TELECOMMUNICATIONS ROOM AND STUB CONDUITS UP INTO ROOM. COORDINATE REQUIREMENTS WITH OWNER.

(33) PROVIDE TWO 4" CONDUITS FROM PULL BOX TO EXISTING TELECOMMUNICATIONS ROOM. CORE DRILL FOUNDATION WALL AS REQUIRED AND ROUTE CONDUITS IN CRAWL SPACE TO TELECOMMUNICATIONS ROOM. STUB CONDUITS INTO ROOM. COORDINATE REQUIREMENTS WITH OWNER.

(34) UNDER ALTERNATE PROVIDE TWO 4" CONDUITS FOR ELECTRICAL SERVICE STUBBED TO AREA SHOWN. COORDINATE EXACT LOCATION WITH MODULAR BUILDING MANUFACTURER. SEE 'MEDIUM VOLTAGE RISER DIAGRAM' ON SHEET E1.1 FOR ADDITIONAL INFORMATION.

(35) UNDER ALTERNATE PROVIDE ONE 4" CONDUIT FOR TELECOMMUNICATIONS CABLING STUBBED TO AREA SHOWN. COORDINATE EXACT LOCATION WITH MODULAR BUILDING MANUFACTURER.

(36) RAISE EXISTING MANHOLE #6 AS REQUIRED TO ACCOMMODATE NEW GRADING.

(37) SEE 'DETAIL A (PLAN VIEW)' AND 'DETAIL B (ELEVATION)' ON SHEET E1.1 FOR ADDITIONAL INFORMATION.

(38) PROVIDE FOUR 4" PVC SCHEDULE 40 CONDUITS INSTALLED PER DUCTBANK DETAIL ON SHEET E1.1.

(39) ALL CONDUIT PENETRATIONS INTO BUILDINGS SHALL BE CORE DRILLED AND LINK-SEALED. (TYP.)

(40) PROVIDE 150/3 ENCLOSED CIRCUIT BREAKER AT WALL PENETRATION FOR SERVICE DISCONNECT.

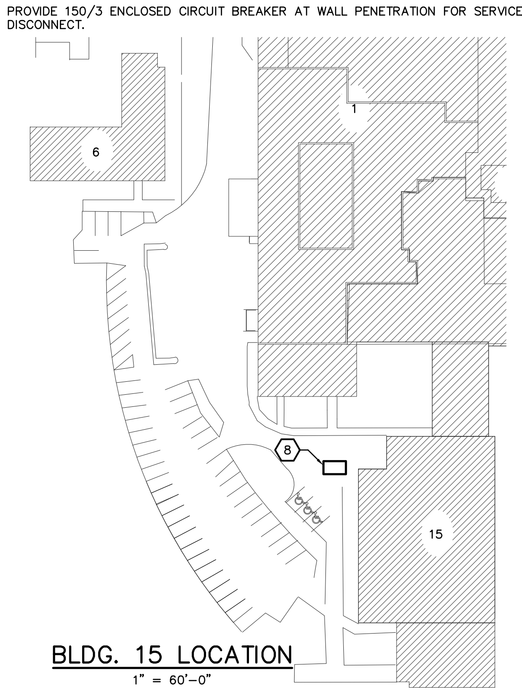

BLDG. 15 LOCATION

1" = 60'-0"

CLH 2008-18

Revisions	Date

FARRIS ENGINEERING CONSULTING ENGINEERS
*OMAHA, NE. *COLORADO SPRINGS, CO.
*LINCOLN, NE. *DES MOINES, IA.
COPYRIGHT 092001
This document and the information contained may not be reproduced or excerpted from without the express written permission of Farris Engineering, Inc. Unauthorized copying, disclosure or construction use are prohibited by the copyright law.

CLH Calvin L. Hinz ARCHITECTS INC

Calvin L. Hinz Architects, P.C. CLH 2007-37
3705 North 200th Street
Elkhorn, Nebraska 68022
Phone:402.291.6941 Fax: 402.291.9193

Farris Engineering
11239 Chicago Circle
Omaha, Nebraska 68154
402.330.5900 402.330.5902

Kenneth D. Lathrum & Associates, P.C.
1901 N. 81st Street
Omaha, Nebraska 68114
402.391.5861

United Engineering
20507 Nicholas Circle, Suite 108
Elkhorn, Nebraska 68022
402.763.9475 402.763.9527

ELECTRICAL SITE UTILITIES PLAN

UTILITY CORRIDOR UPGRADE

VAMC Omaha, NE

Date	Checked by	Drawn by
FEBRUARY 24, 2009	KMA	KMA

Project Number:636-07-134 Phase One

Building Number: West Utility Corridor

Drawing Number: ES1.1

Dwg. 4 of 5

Office of Construction and Facilities Management
Department of Veterans Affairs

VA FORM 08-6231