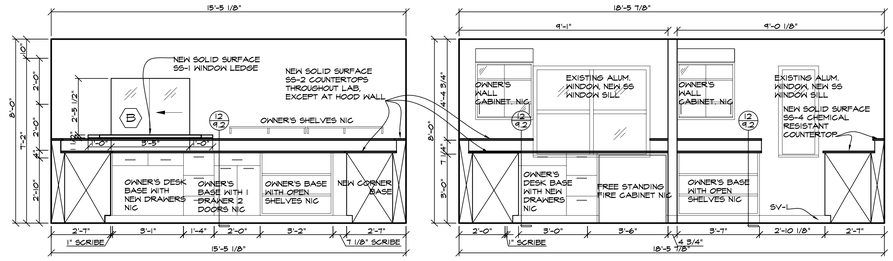

1A 9.2 LAB 117
SCALE: 3/8" = 1'-0"

1B 9.2 LAB 117
SCALE: 3/8" = 1'-0"

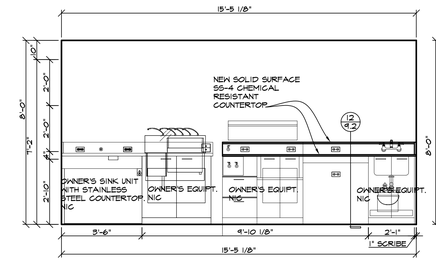

1C 9.2 LAB 117
SCALE: 3/8" = 1'-0"

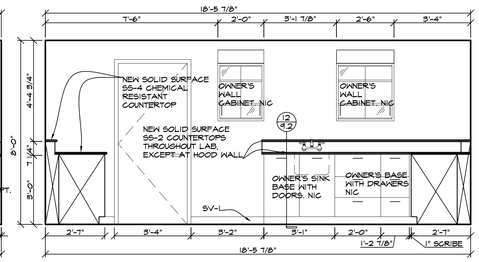

1D 9.2 LAB 117
SCALE: 3/8" = 1'-0"

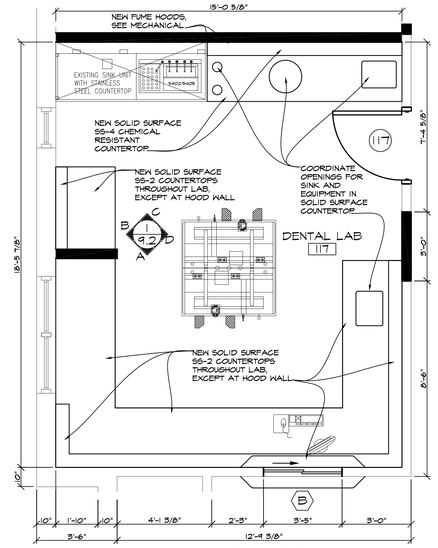

2A 9.2 LAB 117 PLAN
SCALE: 3/8" = 1'-0"

IMPORTANT NOTES FOR LAB 117:
-CONTRACTOR TO COORDINATE WITH OWNER FOR OWNER PROVIDED DENTAL EQUIPMENT AND FURNITURE, 'A' THROUGH 'G'.
-CONTRACTOR TO PROVIDE NEW SOLID SURFACE COUNTERTOPS THROUGHOUT LAB, BOTH WORKING SURFACE AND UPPER SURFACE AS INDICATED IN ELEVATIONS.

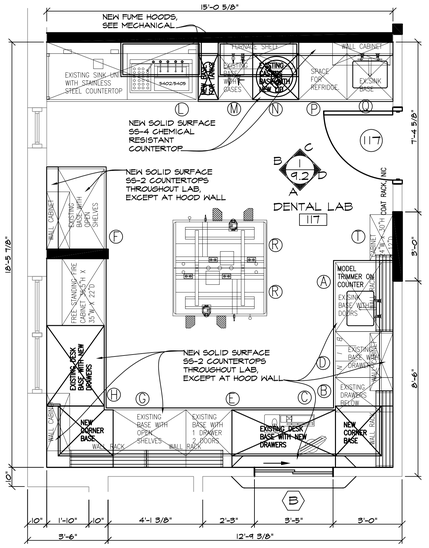

2B 9.2 LAB 117 PLAN WITH OWNER'S EQUIPMENT
SCALE: 3/8" = 1'-0"

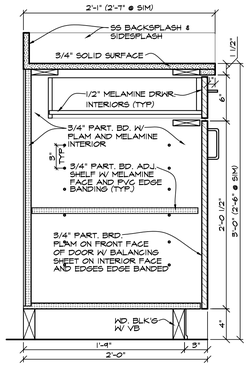

3 9.2 BASE CABINET
SCALE: 1 1/2" = 1'-0"

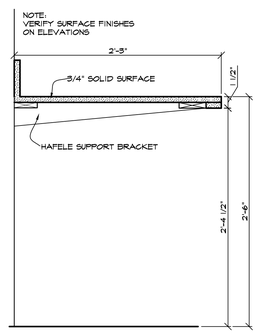

4 9.2 KNEE SPACE COUNTER
SCALE: 1 1/2" = 1'-0"

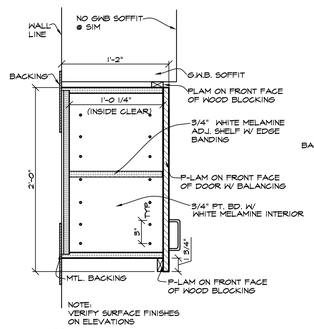

5 9.2 WALL CABINET
SCALE: 1 1/2" = 1'-0"

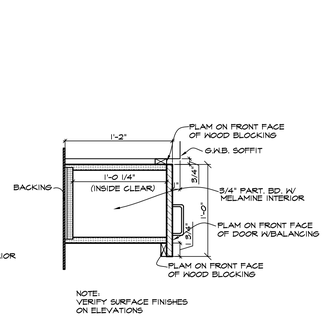

6 9.2 WALL CABINET
SCALE: 1 1/2" = 1'-0"

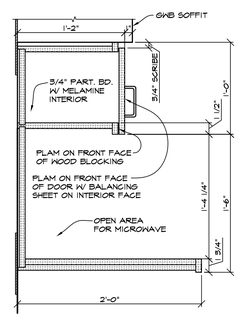

7 9.2 MICROWAVE CABINET
SCALE: 1 1/2" = 1'-0"

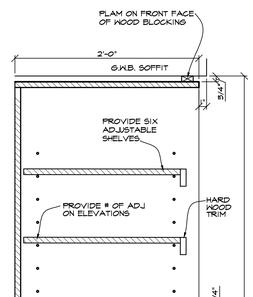

13 9.2 SHELF CABINET
SCALE: 1 1/2"= 1'-0"

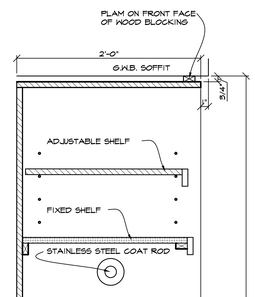

14 9.2 SHELF CABINET
SCALE: 1 1/2"= 1'-0"

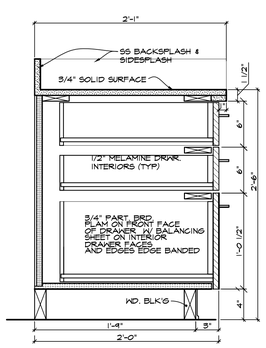

8 9.2 DRAWER BASE CABINET
SCALE: 1 1/2" = 1'-0"

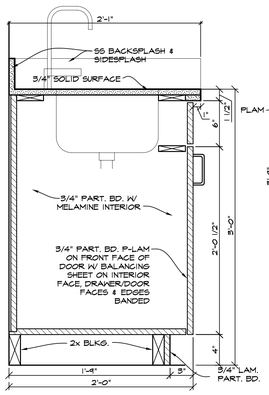

9 9.2 SINK BASE CABINET
SCALE: 1 1/2" = 1'-0"

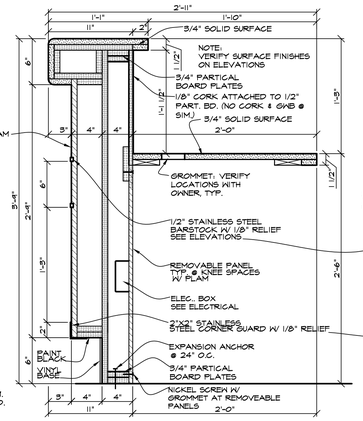

10 9.2 TYP. RECEPTION
SCALE: 1 1/2" = 1'-0"

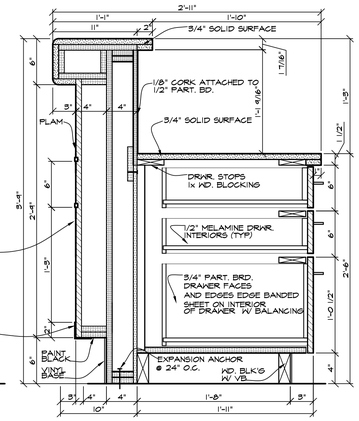

11 9.2 TYP. RECEPTION
SCALE: 1 1/2" = 1'-0"

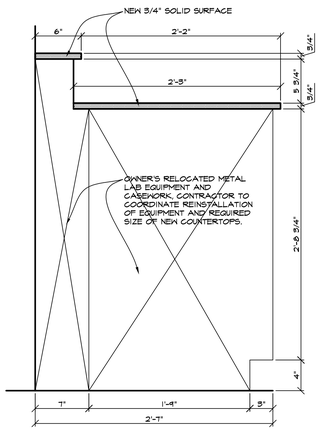

12 9.2 TYP. LAB CABINET
SCALE: 1 1/2" = 1'-0"

Revisions:	Date

© 2000 Calvin L. Hinz Architects P.C.
These plans are specifically designed for construction by Calvin L. Hinz Architects and are intended for no other purposes. Permission for use of this document in part or whole without written consent of Calvin L. Hinz Architects is prohibited.

IMPORTANT CONTRACTOR'S NOTE

1. ALL CONTRACTORS ARE RESPONSIBLE FOR REVIEWING ENTIRE SET OF DOCUMENTS TO DETERMINE THEIR FULL SCOPE OF WORK. CONTRACTOR SHALL NOT BE ALLOWED EXTRA COSTS DUE TO FAILURE TO REVIEW ENTIRE SET OF DOCUMENTS.
2. ANY USE OF THESE ELECTRONIC DRAWINGS OR SCALING OF THE PRINTED DOCUMENTS ARE DONE SO AT THE CONTRACTORS RISK.

CLH Calvin L. Hinz Associates

REGISTERED PROFESSIONAL ARCHITECT CALVIN L. HINZ A-1793 STATE OF NEBRASKA

Calvin L. Hinz Architects, P.C. CLH 2007-37
3705 North 200th Street
Elkhorn, Nebraska 68022
Phone:402.291.6941 Fax: 402.291.9193

Farris Engineering
11239 Chicago Circle
Omaha, Nebraska 68154
402.330.5900 402.330.5902

Kenneth D. Lathrum & Associates, P.C.
1901 N. 81st Street
Omaha, Nebraska 68114
402.391.5861

United Engineering
20507 Nicholas Circle, Suite 108
Elkhorn, Nebraska 68022
402.763.9470 402.763.9527

INTERIOR ELEVATIONS AND CASEWORK SECTIONS

BUILDING SIX
RENOVATION PHASE FOUR / ADDITION PHASE TWO

VAMC Omaha, NE

Date	Checked by	Drawn by
FEBRUARY 20, 2009	CLH	RB/LC

Project Number: Phase 2 and 4 of 636-07-134
Building Number: SIX
Drawing Number: A9.2
Dwg. 16 of 37

CLH 2007-37

Office of Construction and Facilities Management
Department of Veterans Affairs

VA FORM 08-6231