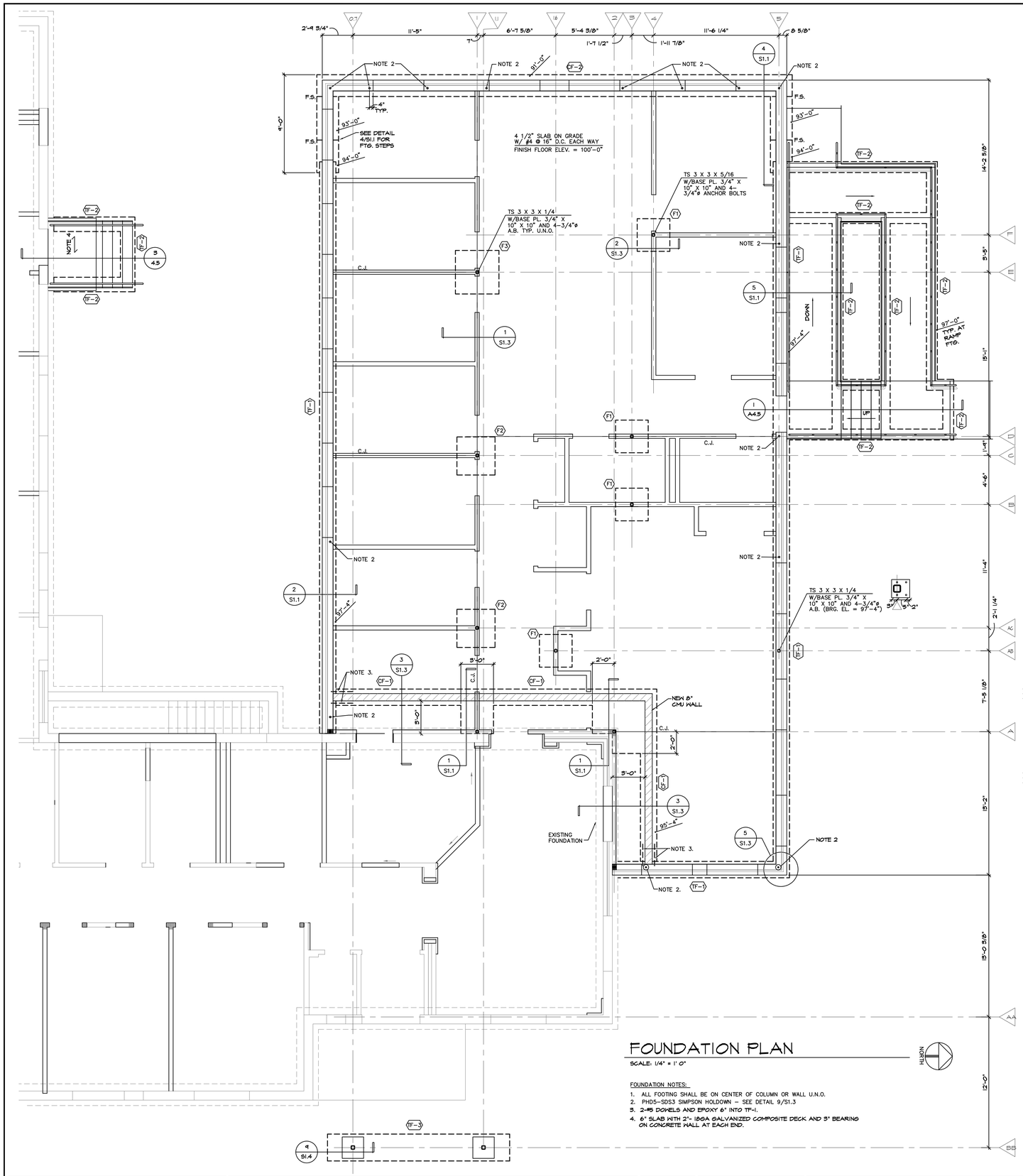

FOUNDATION PLAN

SCALE: 1/4" = 1' 0"

FOUNDATION NOTES:

1. ALL FOOTING SHALL BE ON CENTER OF COLUMN OR WALL U.N.O.
2. PHD5-SDS3 SIMPSON HOLDOWN - SEE DETAIL 9/S1.3
3. 2-#5 DOWELS AND EPOXY 6" INTO TF-1.
4. 6" SLAB WITH 2"- 18GA GALVANIZED COMPOSITE DECK AND 3" BEARING ON CONCRETE WALL AT EACH END.

SPREAD FOOTING SCHEDULE

MARK	SIZE	REINF.	REMARKS
F1	3'-0" X 3'-0" X 1'-0"	3-#4 E:W	BOT.
F2	3'-6" X 3'-6" X 1'-0"	4-#4 E:W	BOT.
F3	4'-0" X 4'-0" X 1'-0"	4-#5 E:W	BOT.

TRENCH FOOTING SCHEDULE

MARK	SIZE	REINF.	REMARKS
TF-1	1'-6" X 3'-4"	3-#5 TOP & BOT.	#4 STIRRUP @ 48" O.C.
TF-2	1'-0" X 3'-4"	2-#5 TOP & BOT.	#3 STIRRUP @ 48" O.C.
TF-3	2'-6" X 3'-6"	2-#6 TOP & BOT.	3-#4 STIRRUP UNDER EA. COL.

CONTINUOUS FOOTING SCHEDULE

MARK	SIZE	REINF.	REMARKS
CF-1	1'-4" X 1'-0"	2-#5	BOT.
CF-2	2'-0" X 1'-0"	3-#5	BOT.

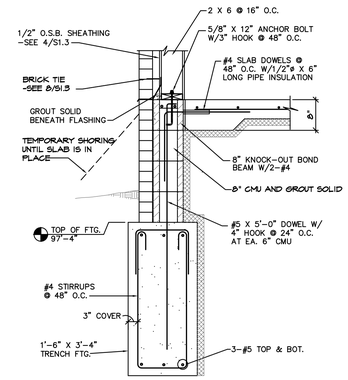

TYPICAL TRENCH FOOTING DETAIL

NO SCALE

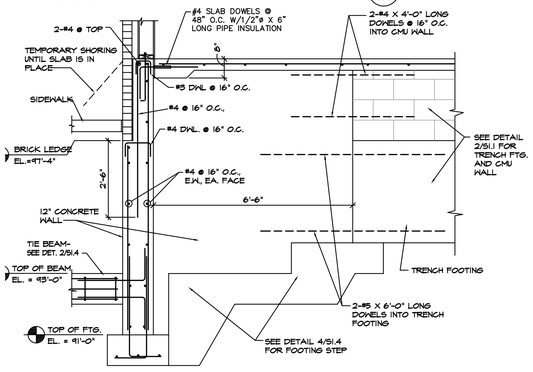

FOUNDATION DETAIL

SCALE: 1/2" = 1'-0"

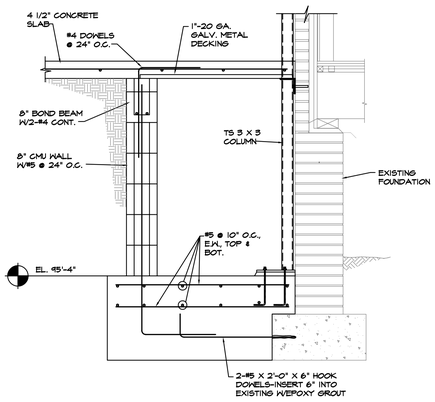

FOUNDATION DETAIL

SCALE: 3/4" = 1'-0"

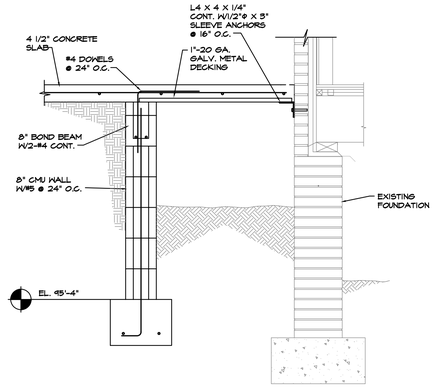

FOUNDATION DETAIL

SCALE: 3/4" = 1'-0"

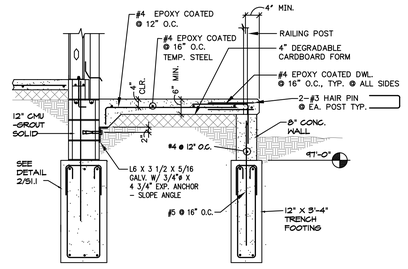

TYP. CROSS SECTION AT RAMP

NO SCALE

© KENNETH D. LATHRUM & ASSOCIATES, P.C. 2009

This document and the information contained herein shall not be reproduced or excerpted from without the express written permission from the author.

NOTE: REPRODUCTION OF THESE DRAWINGS SHALL NOT BE USED IN THE SUBMITTAL OF SHOP DRAWINGS.

NOTE:

DETAILS AND NOTES ON THIS DRAWING APPLY TO ALL OTHER DRAWINGS WHERE SIMILAR CONDITIONS EXIST WHETHER OR NOT NOTED OR DETAILED.

KENNETH D. LATHRUM & ASSOCIATES, P.C.
STRUCTURAL ENGINEERING CONSULTANT
1901 N. 81st St. OMAHA, NE 68114
(402) 391 - 5861 JOB#: 08033

CLH 2007-37

Revisions	Date

© 2000 Calvin L. Hinz Architects P.C.

These plans are specifically designed for construction by Calvin L. Hinz Architects and are intended for no other purposes. Permission for use of this document in part or whole without written consent of Calvin L. Hinz Architects is prohibited.

IMPORTANT CONTRACTOR'S NOTE

1. ALL CONTRACTORS ARE RESPONSIBLE FOR REVIEWING ENTIRE SET OF DOCUMENTS TO DETERMINE THEIR FULL SCOPE OF WORK. CONTRACTOR SHALL NOT BE ALLOWED EXTRA COSTS DUE TO FAILURE TO REVIEW ENTIRE SET OF DOCUMENTS.
2.) ANY USE OF THESE ELECTRONIC DRAWINGS OR SCALING OF THE PRINTED DOCUMENTS ARE DONE SO AT THE CONTRACTORS RISK.

CLH Calvin L. Hinz ARCHITECTS

Calvin L. Hinz Architects, P.C. CLH 2007-37
3705 North 200th Street
Elkhorn, Nebraska 68022
Phone:402.291.6941 Fax: 402.291.9193

Farris Engineering
11239 Chicago Circle
Omaha, Nebraska 68154
402.330.5900 402.330.5902

Kenneth D. Lathrum & Associates, P.C.
1901 N. 81st Street
Omaha, Nebraska 68114
402.391.5861

United Engineering
20507 Nicholas Circle, Suite 108
Elkhorn, Nebraska 68022
402.763.9475 402.763.9527

FOUNDATION PLAN AND DETAILS

Construction Documents (100%) Submittal

Approved: _____ Date: _____
Approved: _____ Date: _____
Approved: _____ Date: _____

BUILDING SIX
RENOVATION PHASE FOUR / ADDITION PHASE TWO

VAMC Omaha, NE

Date	Checked by	Drawn by
FEBRUARY 20, 2009	IWL	TMS

Project Number: Phase 2 and 4 of 636-07-134
Building Number: 9IX
Drawing Number: S10.1
Dwg. 17 of 37

Office of Construction and Facilities Management
Department of Veterans Affairs

VA FORM 08-6231