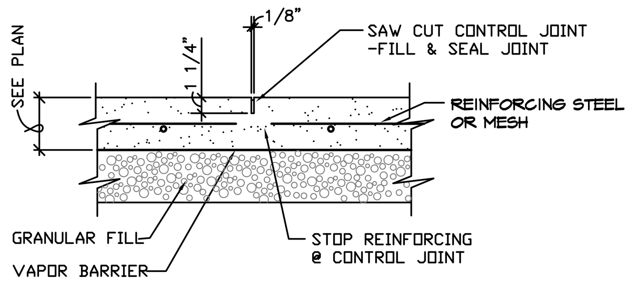

TYP. SLAB-ON-GRADE (C.J.) DETAIL
NO SCALE
1 / S1.3

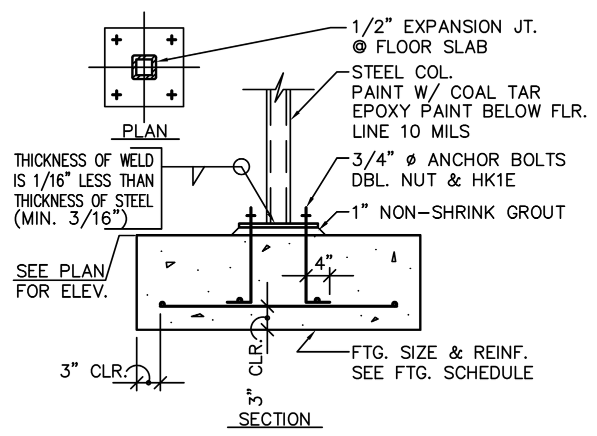

TYP. SPREAD FTG. DETAIL
NO SCALE
2 / S1.3

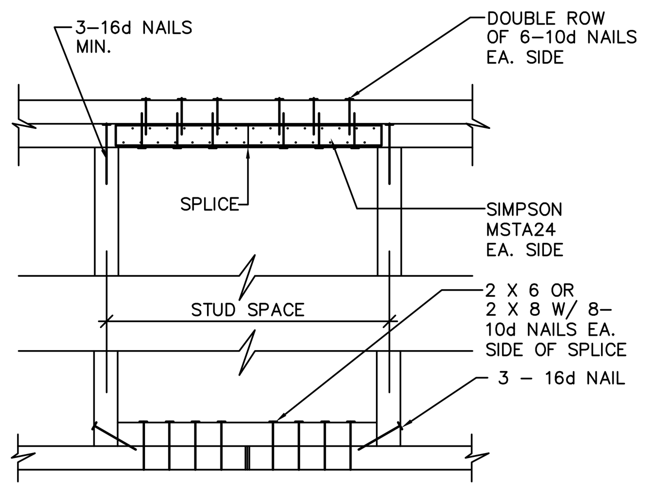

TYP. TOP AND BOT. WALL PL. SPLICE
NO SCALE
3 / S1.3

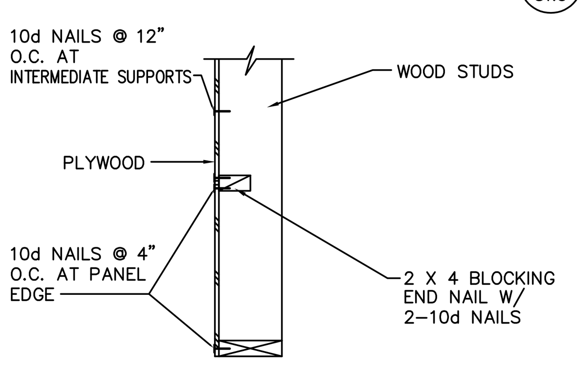

TYPICAL WALL BLOCKING DETAIL
NO SCALE
4 / S1.3

NOTE:
CORNER BARS ARE TO BE THE SAME SIZE & SPACING AS HORIZONTAL BARS. CORNER BARS SHALL BE PROVIDED AT "T"-INTERSECTIONS.

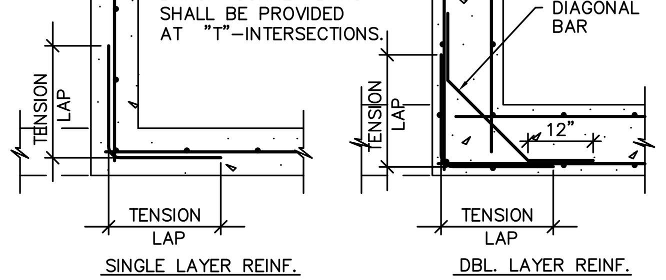

CORNER REINFORCING DET.
NO SCALE
5 / S1.3

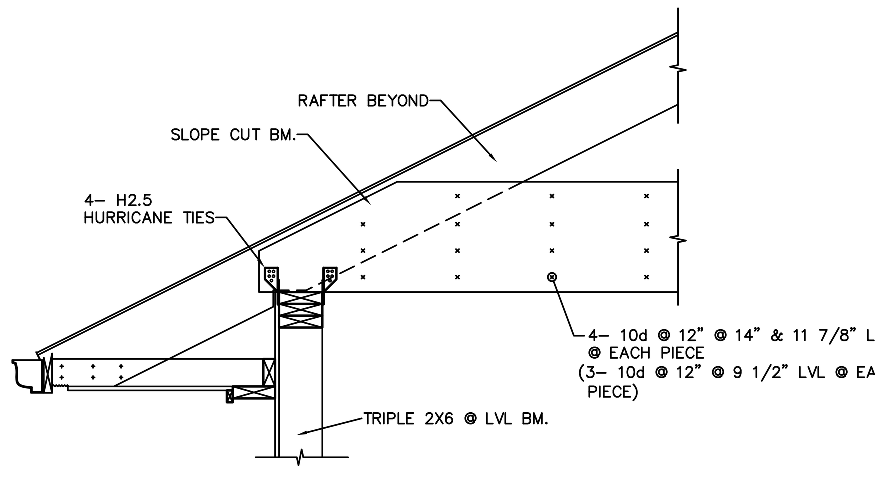

TYP. MICROLLAM (LVL) BRG. DET.
SCALE: 3/4" = 1'-0"
6 / S1.3

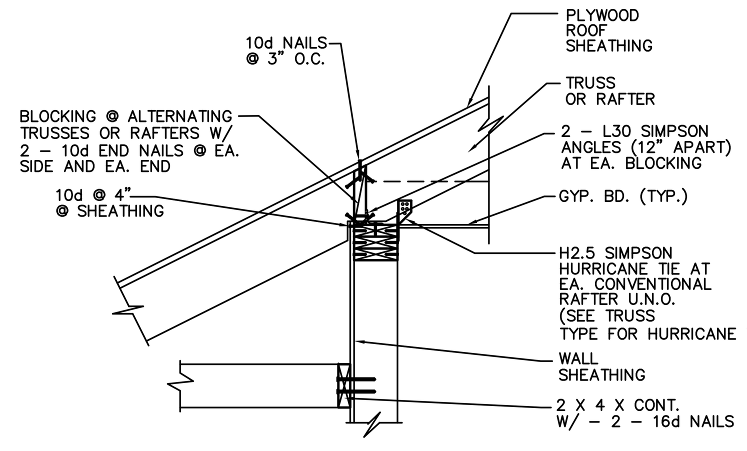

TYP. ROOF EAVE DETAIL
NO SCALE
7 / S1.3

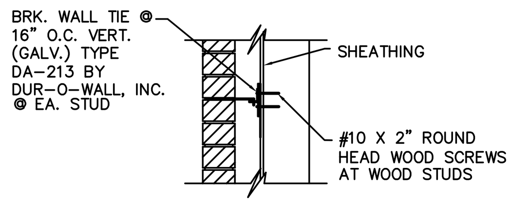

TYP. BRICK TIE DET.
NO SCALE
8 / S1.3

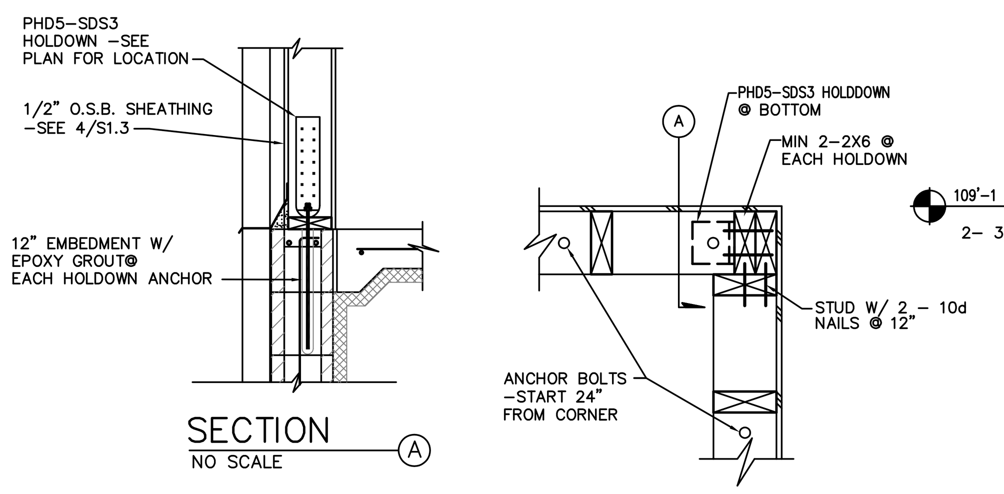

TYP. HOLDOWN DETAIL
SCALE : 1" = 1'-0"
9 / S1.3

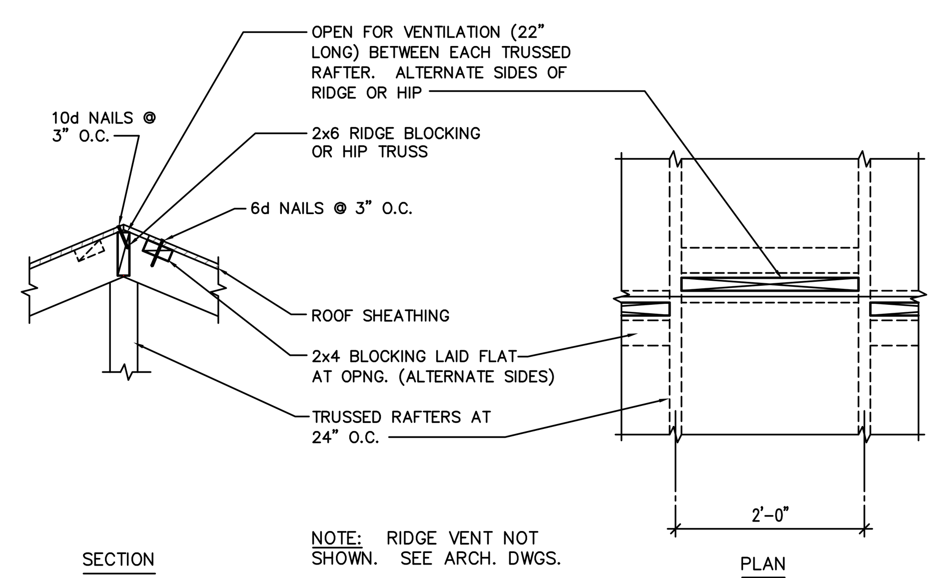

TYPICAL BLOCKING AT VENT
NO SCALE
10 / S1.3

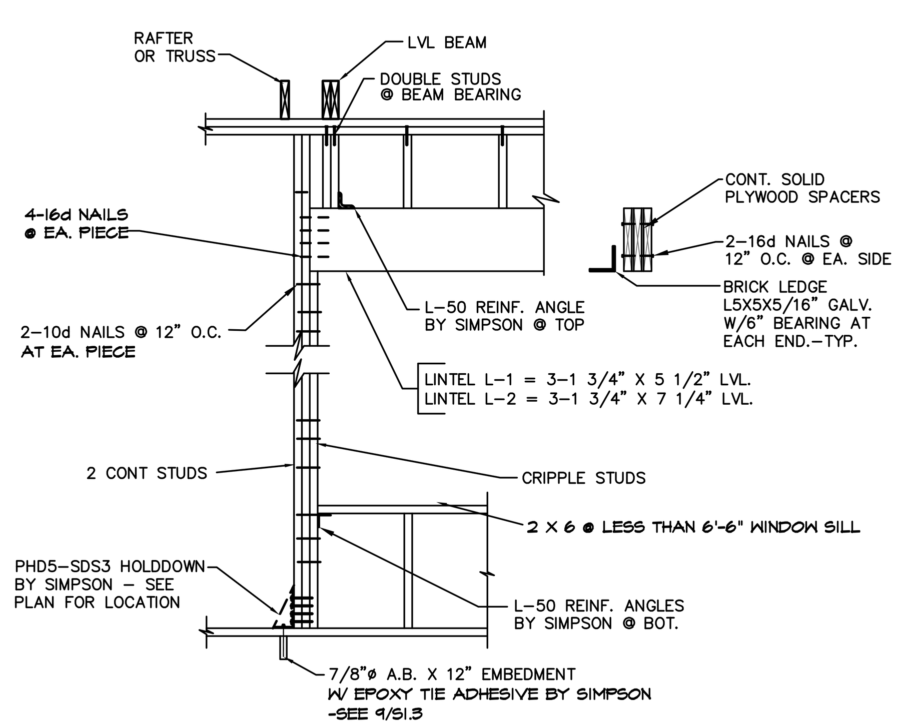

TYPICAL EXTERIOR WALL OPNG. LINTEL DETAIL (U.N.O.)
NO SCALE
11 / S1.3

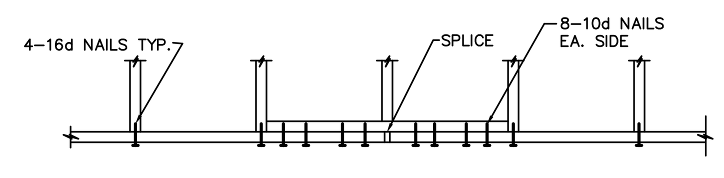

TYP. FASCIA SPLICE
NO SCALE
12 / S1.3

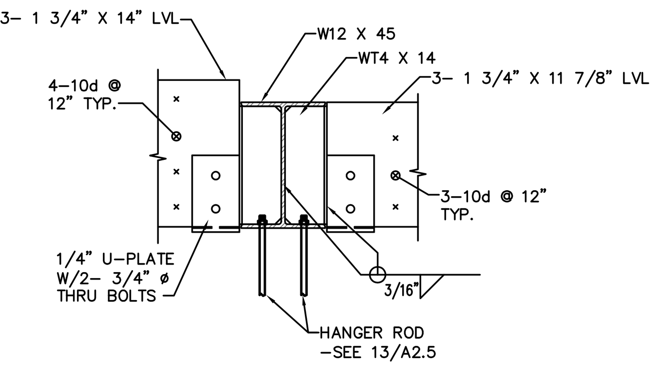

BM. CONN. DETAIL
SCALE: 1" = 1'-0"
13 / S1.3

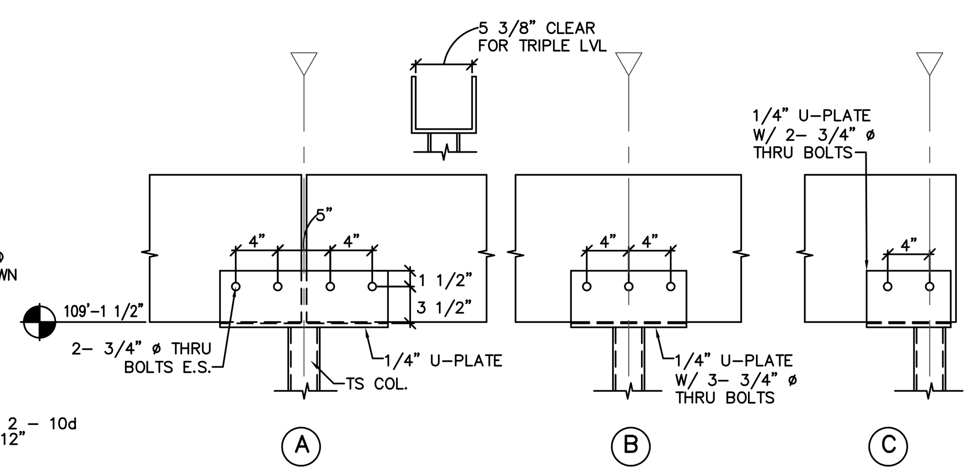

TYP. MICROLLAM (LVL) BEARING DET.
SCALE: 1" = 1'-0"
14 / S1.3

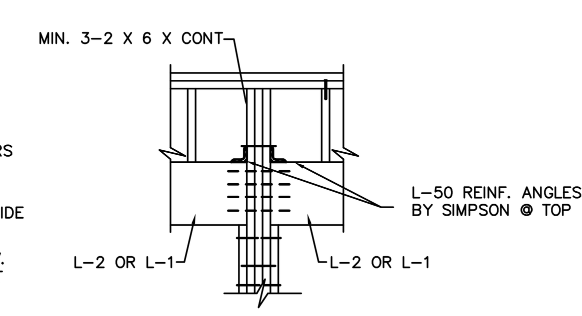

TWO ADJACENT OPENING CONDITION (A)

STRUCTURAL ABBREVIATIONS

A.B.	ANCHOR BOLT	JST.	JOIST
ADD'L	ADDITIONAL	K.	KIPS
&	AND	LAM.	LAMINATED
ARCH.	ARCHITECTURAL	LG.	LONG
ALT.	ALTERNATE	L.L.V.	LONG LEG VERTICAL
@	AT	L.L.H.	LONG LEG HORIZONTAL
BSMT.	BASEMENT	L.L.B/B	LONG LEGS BACK TO BACK
BM.	BEAM	LONGIT.	LONGITUDINAL
BRG.	BEARING	MAS.	MASONRY
BLK.	BLOCK	MAX.	MAXIMUM
BRK.	BRICK	MBR.	MEMBER
BOT.	BOTTOM	MEZZ.	MEZZANINE
B.O.W.	BOTTOM OF WALL	MFR.	MANUFACTURER
BRDG.	BRIDGING	MIN.	MINIMUM
BLDG.	BUILDING	MTL.	METAL
CEM.	CEMENT	N.I.C.	NOT IN CONTRACT
C.F.	CONTINUOUS FOOTING	NO.	NUMBER
C	CENTER LINE	N.T.S.	NOT TO SCALE
CLR.	CLEAR	OPNG.	OPENING
C.M.U.	CONCRETE MASONRY UNIT	O.C.	ON CENTER
COND.	CONDITION	O.F.	OUTSIDE FACE
COL.	COLUMN	PNL.	PANEL
COMP.	COMPRESSIBLE	PCS.	PIECES
CONC.	CONCRETE	P	PLATE
CONN.	CONNECTION	PSF.	POUNDS PER SQUARE FOOT
C.J.	CONSTRUCTION JOINT	PSI.	POUNDS PER SQUARE INCH
CONT.	CONTINUOUS	R./RAD.	RADIUS
CT.J.	CONTROL JOINT	REF.	REFERENCE
CU.YD.	CUBIC YARD	REINF.	REINFORCEMENT/REINFORCING
DBL.	DOUBLE	R.D.	ROOF DRAIN
DIA.	DIAMETER	SECT.	SECTION
DIM.	DIMENSION	SHT.	SHEET
DP.	DEEP/DEPTH	S.L.B/B	SHORT LEGS BACK TO BACK
DWG.	DRAWING	S.B.	SIDE BAR
DWL.	DOWEL	SIM.	SIMILAR
EA.	EACH	S.M.S.	SHEET METAL SCREW
E.F.	EACH FACE	SQ.	SQUARE
E.S.	EACH SIDE	STD.	STANDARD
E.W.	EACH WAY	STAG.	STAGGERED
EL.	ELEVATION	STL.	STEEL
EXIST.	EXISTING	STIFF.	STIFFENER
EXP.	EXPANSION	STIR.	STIRRUP
EXT.	EXTERIOR	STRUCT.	STRUCTURAL
FIN.FLR.	FINISH FLOOR	TEMP. STL.	TEMPERATURE STEEL
FLR.	FLOOR	T & B	TOP AND BOTTOM
FRMG.	FRAMING	T & G	TONGUE AND GROOVE
F.S.	FOOTING STEP	T.B.	TOP BAR
FT.	FOOT/FEET	T.O.D.	TOP OF DECK
FTG.	FOOTING	T.O.F.	TOP OF FOOTING
FNDN.	FOUNDATION	T.O.M.	TOP OF MASONRY
GALV.	GALVANIZED	T.O.P.	TOP OF PILE CAP
GA.	GAUGE	T.O.S.	TOP OF STRUCTURAL STEEL
GR.BM.	GRADE BEAM	T.O.W.	TOP OF WALL
HT.	HEIGHT	TRANS.	TRANSVERSELY
HK.	HOOK	T.S.	TUBE STEEL
HK1E	HOOK ONE END	TYP.	TYPICAL
HK2E	HOOK TWO ENDS	U.N.O.	UNLESS NOTED OTHERWISE
HORIZ.	HORIZONTAL	VERT.	VERTICAL
IN.	INCHES/INCH	W.P.	WORK POINT
I.F.	INSIDE FACE	WT.	WEIGHT
INSUL.	INSULATION	W.W.F.	WELDED WIRE FABRIC
INT.	INTERIOR	W/	WITH
JT.	JOINT	W/O	WITHOUT
		WD	WOOD

NAILING SCHEDULE
MINIMUM REQUIREMENTS

CONNECTION		NAILING
1. JOIST TO SILL OR GIRDER, TOENAIL		4-10d
2. BRIDGING TO JOIST, TOENAIL EA. END		2-8d
3. 1" X 6" SUBFLOOR OR LESS TO EA. JOIST, FACE NAIL		3-8d BOX NAILS
4. WIDER THAN 1" X 6" SUBFLOOR TO EA. JOIST, FACE NAIL		4-8d BOX NAILS
5. SOLE PLATE TO JOIST OR BLOCKING, FACE NAIL	2x4 2x6 2x8	16d AT 16" O.C. 2-16d AT 16" O.C. 3-16d AT 24" O.C.
6. TOP PLATE TO STUD, END NAIL	2x4 2x6 2x8	2-16d 3-16d 4-16d
7. STUD TO SOLE PLATE-SAME AS TOP PLATE UNLESS TOENAILED	2x4 2x6 2x8	4-10d 1/2 EA. SIDE 6-10d 1/2 EA. SIDE 8-10d 1/2 EA. SIDE
8. DOUBLE STUDS, FACE NAIL	2x4 2x6 2x8	10d AT 24" O.C. 2-10d AT 24" O.C. 3-10d AT 24" O.C.
9. DOUBLED TOP PLATES, FACE NAIL	2x4 2x6 2x8	10d AT 16" O.C. 2-16d AT 16" O.C. 3-16d AT 24" O.C.
10. CONTINUOUS HEADER, TWO PIECES		10d AT 16" O.C. ALONG EA. EDGE
11. CEILING JOISTS TO PLATE, TOENAIL		3-10d
12. CONTINUOUS HEADER TO STUD, TOENAIL		4-10d
13. CEILING JOISTS, LAPS OVER PARTITIONS, FACE NAIL		4-10d
14. CEILING JOISTS TO PARALLEL RAFTERS, FACE NAIL		6-10d
15. RAFTER OR TRUSS TO PLATE, TOENAIL		6-10d
16. BUILT-UP CORNER STUDS		16d AT 24" O.C.
* PREDRILL AT END NAILINGS		

LEADHOLE DIAMETER FOR LAG BOLTS

DIA. OF BOLT	SHANK	THREADED PORTION
3/8	3/8	15/64
1/2	1/2	5/16
5/8	5/8	13/32
3/4	3/4	1/2
7/8	7/8	39/64
1	1	23/32

PREBORED HOLE DIA. FOR COMMON NAILS

PENNYWEIGHT	HOLE DIAMETER
20d	9/64
30d	9/64
40d	5/32
50d	11/64
60d	3/16

GENERAL STRUCTURAL NOTES

FOUNDATIONS AND FOOTINGS

1. FOUNDATIONS ARE DESIGNED FOR AN ASSUMED BEARING PRESSURE OF 1500 PSF FOR CONTINUOUS FOOTINGS AND FOR ISOLATED SPREAD FOOTINGS.
2. ALL FOOTINGS SHALL BE PLACED ON UNDISTURBED VIRGIN SOILS.
3. IF CONTACTOR DISCOVERS POOR SOILS CONDITIONS UPON EXCAVATION, HE SHALL NOTIFY THE ARCHITECT IN WRITING. FOOTINGS WILL BE REDESIGNED IF NECESSARY, AND CONTRACTOR SHALL BE COMPENSATED FOR EXTRA COSTS.
4. ALL OVER EXCAVATION SHALL BE FILLED WITH CONCRETE.
5. ELEVATIONS MARKED ARE TOP OF FOOTINGS. (T.O.F.)
6. CONTRACTOR SHALL NOT PLACE BACKFILL AGAINST LOWER LEVEL WALLS PRIOR TO COMPLETION OF GRADE SLAB AND THE SETTING AND GROUTING OF FIRST FLOOR SLABS OR ROOF STRUCTURE.
7. CONTRACTOR SHALL BRING THE BACKFILL UP EQUALLY ON BOTH SIDES OF THE FOUNDATION WALLS, THAT ARE BELOW GRADE ON BOTH SIDES, SO AS NOT TO CREATE AN UNBALANCED LOADING.

DESIGN LOADS

ROOF SNOW LOAD –
1. GROUND SNOW LOAD = 30 PSF
2. SNOW EXPOSURE FACTOR, C_e= 1.0
3. SNOW LOAD IMPORTANCE FACTOR, I= 1.1
4. THERMAL FACTOR, C_t= 1.1

WIND LOAD –
1. BASIC WIND SPEED (3 SECOND GUST), MILES PER HOUR= 90 MPH
2. WIND IMPORTANCE FACTOR, I, AND BUILDING CATEGORY= 1.15
3. WIND EXPOSURE, IF MORE THAN ONE WIND EXPOSURE IS UTILIZED, THE WIND EXPOSURE AND APPLICABLE WIND DIRECTION SHALL BE INDICATED = B
4. COMPONENTS AND CLADDING. THE DESIGN WIND PRESSURES IN TERMS OF POUNDS PER SQUARE FOOT TO BE USED FOR THE DESIGN OF EXTERIOR COMPONENT AND CLADDING MATERIALS NOT SPECIFICALLY DESIGNED BY THE REGISTERED DESIGN PROFESSIONAL = 30 PSF

EARTHQUAKE DESIGN DATA –
1. S_S = 0.15
2. SITE CLASS = D
3. IMPORTANCE FACTOR, I = 1.25

SPECIAL INSPECTION

1. THE OWNER SHALL EMPLOY THE SPECIAL INSPECTOR FOR THE SPECIAL INSPECTION IN ACCORDANCE WITH THE INTERNATIONAL BUILDING CODE 2000 AS REQUIRED FOR CONCRETE, REINFORCING STEEL, WELDING, AND HIGH STRENGTH BOLTING. PROVIDE PERIODIC SPECIAL INSPECTIONS PER IBC 00 FOR WELDING OF METAL ROOF DECK.
2. THE CONTRACTOR SHALL PROVIDE THE SPECIAL INSPECTOR SUFFICIENT NOTIFICATION TO ALLOW THE REQUIRED INSPECTIONS BE MADE WITHOUT DELAYING THE CONSTRUCTION SCHEDULE.

CONCRETE AND REINFORCING STEEL

1. ALL CONCRETE WORK SHALL CONFORM TO ALL REQUIREMENTS OF ACI 301 "SPECIFICATIONS FOR STRUCTURAL CONCRETE FOR BUILDINGS" EXCEPT AS OTHERWISE NOTED OR SPECIFIED.
2. ALL REINFORCING STEEL SHALL BE ASTM A-615 GRADE 60 FOR ALL REINFORCING.
3. CONCRETE CLASSES AND USAGE:

   A. L 5.5 – 3000 PSI 30% LIMESTONE AGGREGATE FOR ALL FOOTINGS AND FOUNDATION WALLS
   MIX REQUIREMENTS
   -- MINIMUM 3000 PSI STRENGTH AT 28 DAYS
   -- MINIMUM 5.5 SACKS OF CEMENT PER CUBIC YARD
   -- SLUMP RANGE BETWEEN 2" AND 4"
   -- AIR ENTRAINMENT RANGE BETWEEN 4% AND 6%
   -- MAXIMUM 6.0 GALLONS OF WATER PER SACK OF CEMENT

   B. L40-6P NO AIR –4000 PSI 40% LIMESTONE AGGREGATE FOR INTERIOR SLAB-ON-GRADE
   MIX REQUIREMENTS
   -- CEMENT 564 LBS.
   -- WATER 0.44 LB./LB.
   -- SAND-GRAVEL 1935 LBS.
   -- LIMESTONE 1290 LBS.
   -- AIR CONTENT 2.0%
   -- WATER REDUCER 3 OZ./100 LB.
   -- SLUMP RANGE 3"-5"

   C. L6.5 – 4000 PSI 30% LIMESTONE AGGREGATE FOR ALL OTHER CONCRETE, UNLESS NOTED OR SPECIFIED OTHERWISE
   MIX REQUIREMENTS
   -- MINIMUM 4000 PSI STRENGTH AT 28 DAYS
   -- MINIMUM 6.5 SACKS OF CEMENT PER CUBIC YARD
   -- SLUMP RANGE BETWEEN 2" AND 4"
   -- AIR ENTRAINMENT RANGE BETWEEN 4% AND 6%
   -- MAXIMUM 5.0 GALLONS OF WATER PER SACK OF CEMENT

4. ALL REBARS SHALL BE CONTINUOUS OR SHALL LAP 56 BAR DIAMETERS UNLESS NOTED OR SPECIFIED OTHERWISE.
5. CONTRACTOR SHALL VERIFY AND COORDINATE ALL MECHANICAL AND ELECTRICAL SLEEVES AND ALL UTILITY LOCATIONS PRIOR TO PLACEMENT OF CONCRETE.
6. PROVIDE CORNER BARS FOR MAIN REINFORCEMENT.
7. ALL CONDUITS EMBEDDED IN STRUCTURAL CONCRETE SHALL BE RIGID STEEL TYPE AND SHALL NOT DISPLACE THE REBAR OR MORE THAN 2% OF THE CONCRETE IN ANY MEMBER. MINIMUM SPACING BETWEEN CONDUITS SHALL BE THREE DIAMETERS OF THE CONDUIT.
8. SLEEVES THROUGH FOOTINGS AND WALLS SHALL BE OF SCHEDULE 40 STEEL PIPE AND SHALL BE INSTALLED BY THE CONTRACTOR WHO REQUIRES THEM.
9. START FIRST REBAR 3" FROM EDGE AT SLABS WITH REBAR NOTED PER INCH SPACING.
10. ALL REINFORCING STEEL SHALL BE DOWELED OR CONTINUOUS AT CONSTRUCTION JOINTS. DOWELS SHALL BE THE SAME SIZE AND SPACING AS SCHEDULED STEEL AND SHALL LAP 56 BAR DIAMETERS.
11. EPOXY COAT ALL REINFORCING BARS IN COMPLIANCE WITH ASTM A-775-81 IN STOOP SLABS AND WHERE NOTED.
12. CONCRETE PROTECTION FOR REINFORCEMENT SHALL BE AS FOLLOWS UNLESS NOTED OR SPECIFIED OTHERWISE:

	CLEAR COVER * (inches)
CAST AGAINST AND PERMANENTLY EXPOSED TO EARTH	3
EXPOSED TO EARTH OR WEATHER: #6 THROUGH # 18 BARS	2
EXPOSED TO EARTH OR WEATHER: #5 BARS AND SMALLER	1 1/2
NOT EXPOSED TO WEATHER OR IN CONTACT WITH THE GROUND: SLABS, WALLS, JOISTS	3/4
BEAMS, GIRDERS, COLUMNS PRINCIPAL REINFORCEMENT TIES, STIRRUPS, OR SPIRALS	1 1/2

* SEE LATEST INTERNATIONAL BUILDING CODE FOR ALLOWABLE TOLERANCES

STRUCTURAL LUMBER AND CARPENTRY

1. PROVIDE ONE HEAVY GALVANIZED IRON WASHER UNDER ALL BOLTS WHERE PLATES ARE NOT SHOWN.
2. ALL PLYWOOD ROOF AND FLOOR DECKING SHALL BE GLUED AND NAILED TO JOISTS. ALL FLOOR DECKING SHALL BE TONGUE AND GROOVE WITH GLUED JOINTS.
3. ALL METAL HANGERS AND CONNECTORS SHALL BE MANUFACTURED BY SIMPSON OR KANT-SAG AND SHALL BE THE SIZE AND TYPE INDICATED ON THE DRAWINGS. NUMBER AND SIZE OF FASTENERS SHALL BE AS REQUIRED TO DEVELOP THE MAXIMUM CAPACITY OF HANGER OR CONNECTOR.
4. ALL METAL THAT COMES IN CONTACT WITH TREATED LUMBER SHALL BE STAINLESS STEEL OR HOT DIPPED GALVANIZED CONFORMING TO ASTM G185.

© KENNETH D. LATHRUM & ASSOCIATES, P.C. 2009

This document and the information contained herein shall not be reproduced or excerpted from without the express written permission from the author.

NOTE: REPRODUCTION OF THESE DRAWINGS SHALL NOT BE USED IN THE SUBMITTAL OF SHOP DRAWINGS.

DEMOLITION

1. PRIOR TO REMOVAL OF THE EXISTING SUPPORTING STRUCTURE, ADEQUATELY SHORE THE EXISTING PORTIONS SO THAT NO MOVEMENT OCCURS. MAINTAIN THE EXISTING LINES AND ELEVATIONS AFTER PERMANENT SUPPORTS ARE IN PLACE.
2. SHORING FOR THE EXISTING STRUCTURE MUST BE POSITIONED TO ALLOW THE BUILDING TO OPERATE AND REMAIN OPEN DURING ITS NORMAL OPERATING HOURS.
3. ANY DEMOLITION OR CONSTRUCTION THAT RESULTS IN DUST OR NOISE MUST BE SEPARATED FROM THE EXISTING BUILDING BY ADEQUATE DUST PARTITIONS (2 X 4 STUDS AT 24" O.C. WITH 3/8" PLYWOOD ONE AND A 4 MIL POLYETHYLENE LINER.)

CONCRETE MASONRY WALLS

1. WALLS SHALL BE STANDARD WEIGHT CONCRETE BLOCK OR BRICK OF SIZE INDICATED ON THE DRAWINGS.
2. ALL MASONRY WALL SHALL HAVE GALVANIZED MASONRY REINFORCEMENT AT 16" O.C. LADDER TYPE DUR-O-WAL, OR EQUAL, AND SHALL BE LAPPED CONTINUOUS AT ALL SPLICE LOCATIONS UNLESS NOTED OR SPECIFIED OTHERWISE.
3. GROUT FOR FILLING BLOCK CELLS SHALL BE COARSE GROUT, SHALL HAVE A MINIMUM STRENGTH OF 3000 PSI AT 28 DAYS, AND SHALL HAVE A SLUMP RANGE BETWEEN 9" AND 11"
4. ALL EXTERIOR MASONRY AND ALL INTERIOR LOAD BEARING MASONRY SHALL BE LAID-UP ASTM TYPE "S" MORTAR.
5. HOLLOW UNITS SHALL BE LAID WITH FULL MORTAR COVERAGE ON HORIZONTAL AND VERTICAL FACE SHELLS.
6. GROUT OR MORTAR ADMIXTURES ARE NOT ALLOWED WITHOUT APPROVAL OF THE ENGINEER.
7. ALL REINFORCING STEEL SHALL BE ASTM A-615 GRADE 60 FOR ALL REINFORCING EXCEPT STIRRUPS AND TIES SHALL BE GRADE 40 UNLESS NOTED OR SPECIFIED OTHERWISE.
8. REINFORCEMENT SHALL BE LAPPED 56 TIMES THE BAR DIAMETER.
9. DOWEL REINFORCEMENT INTO FOOTINGS. USE THE SAME SIZE BAR AS THE WALL REINFORCING.
10. VERTICAL REINFORCING BARS SHALL BE HELD RIGIDLY IN POSITION WHILE THE GROUT FILL IS BEING PLACED. WHERE ACCESS FROM THE TOP IS POSSIBLE, THE CELLS SHALL BE CLEANED OUT AT THE END OF EACH DAY'S WORK. THE REINFORCING SHALL BE INSERTED FROM THE TOP AND POSITIONED FROM THE TOP AND BOTTOM ACCESS HOLES.
11. WALLS SHALL STAND 24 HOURS BEFORE GROUTING. GROUTING SHALL BE DONE IN 4 FEET LIFTS. GROUT SHALL BE VIBRATED WHEN PLACED AND AGAIN VIBRATED IN A FEW MINUTES LATER TO REMOVE AIR POCKETS CAUSED BY THE WATER IN THE GROUT BEING SUCKED INTO THE DRY AND POROUS BLOCK. THE FIRST POUR SHALL BE ALLOWED TO SET BEFORE MAKING THE SECOND POUR.
12. ALL MASONRY WALLS ARE DESIGNED TO BE BRACED BY THE COMPLETED STRUCTURE. THE CONTRACTOR SHALL PROVIDE BRACING AS NECESSARY TO BRACE WALLS DURING THE CONSTRUCTION PERIOD.

STRUCTURAL STEEL

1. FABRICATOR: COMPANY SPECIALIZING IN PERFORMING THE WORK OF THIS SECTION WITH MINIMUM 10 YEARS DOCUMENTED EXPERIENCE AND HAVE AN AISC STD CERTIFICATION. FABRICATORS THAT DO NOT HAVE AN AISC STD CERTIFICATION SHALL EMPLOY AN APPROVED TESTING AGENCY TO INSPECT WORK REQUIRING SPECIAL INSPECTION WHEN THE ASSEMBLY OR FABRICATION IS PERFORMED OFF-SITE. THE TESTING AGENCY SHALL FURNISH WEEKLY INSPECTION REPORTS AND A FINAL REPORT TO THE BUILDING OFFICIAL AND THE ARCHITECT/ENGINEER CERTIFYING THE WORK WAS PERFORMED ADEQUATELY IN ACCORDANCE WITH THE APPROVED PLANS AND SPECIFICATIONS.
2. CONFORM TO THE REQUIREMENTS OF THE FOLLOWING CODES AND REFERENCES. AISC "CODE OF STANDARD PRACTICE FOR STEEL BUILDINGS AND BRIDGES" (EXCEPT DELETE THE FIRST TWO SENTENCES UNDER PARAGRAPH 4.2.1.); AISC "SPECIFICATIONS FOR THE DESIGN, FABRICATION, AND ERECTION OF STRUCTURAL STEEL FOR BUILDINGS" INCLUDING "COMMENTARY"; AWS "STRUCTURAL WELDING CODE – STEEL"; COMPLY WITH APPLICABLE PROVISIONS EXCEPT AS OTHERWISE INDICATED.
3. ALL STRUCTURAL STEEL BOLTS SHALL BE 3/4" DIAMETER ASTM A-325 SNUG TIGHT UNLESS NOTED OR SPECIFIED OTHERWISE. ANCHOR BOLTS SHALL BE 3/4" DIAMETER A-307 WITH 4" HOOK X 18" LONG, UNLESS NOTED OR SPECIFIED OTHERWISE.
4. ALL WELDS SHALL BE E 70 ELECTRODES AND SHALL BE SIZED TO RESIST THE MEMBER FORCES OR TO DEVELOP THE CONNECTION OR MEMBER CAPACITY.
5. STANDARD AISC CONNECTIONS SHALL BE USED EXCEPT AS DETAILED. CONNECTIONS SHALL BE CAPABLE OF SUPPORTING THE MINIMUM SHEAR REACTION NOTED AT THE END OF EACH BEAM.
6. ALLOW FOR ERECTION LOADS, AND FOR SUFFICENT TEMPORARY BRACING TO MAINTAIN STRUCTURE SAFE, PLUMB, AND IN TRUE ALIGNMENT UNTIL COMPLETION OF ERECTION AND INSTALLATION OF PERMANENT BRACING.

MECHANICAL ANCHORS

1. EXPANSION ANCHORS SHALL BE SIZE AND EMBEDMENT AS NOTED ON THE DRAWINGS. IF EMBEDMENT IS NOT NOTED, EMBEDMENT SHALL BE A MINIMUM OF 6-HOLE DIAMETERS.

   ANCHOR SPACING SHALL BE A MINIMUM OF 12-HOLE DIAMETERS AND THE MINIMUM EDGE DISTANCE SHALL BE 12-HOLE DIAMETERS, BUT NEVER LESS THAN 4".

   ACCEPTABLE ANCHOR PRODUCTS:

   KWIK-BOLT II MANUFACTURED BY HILTI

   TRUBOLT WEDGE ANCHORS BY ITW RAMSET/REDHEAD

2. SLEEVE ANCHORS SHALL BE SIZE AND EMBEDMENT AS NOTED ON THE DRAWINGS. IF EMBEDMENT IS NOT NOTED, EMBEDMENT SHALL BE A MINIMUM OF 4-HOLE DIAMETERS.

   ANCHOR SPACING SHALL BE A MINIMUM OF 9-HOLE DIAMETERS AND THE MINIMUM EDGE DISTANCE SHALL BE 5-HOLE DIAMETERS BUT NEVER LESS THAN 3".

   ACCEPTABLE SLEEVE ANCHOR PRODUCTS:

   DYNABOLT MANUFACTURED BY ITW RAMSET/REDHEAD

   SLEEVE ANCHOR MANUFACTURED BY HILTI

3. CONCRETE SCREW ANCHOR FOR FASTENING TO MASONRY AND CONCRETE. SIZE AS NOTED ON THE DRAWINGS. MINIMUM EMBEDMENT SHALL BE 1 3/8". ANCHOR SPACING SHALL BE 4" OR GREATER.

   ANCHOR EDGE DISTANCE SHALL BE A MINIMUM OF 2 1/2".

   ACCEPTABLE ANCHOR PRODUCTS:

   TAPCON MANUFACTURED BY ELCO

   TAPCON MANUFACTURED BY ITW RAMSET/REDHEAD

   KWIKCON II MANUFACTURED BY HILTI

4. POWDER DRIVEN FASTENER – HILTI.

   MINIMUM SPACING IN CONCRETE – 3"

   MINIMUM SPACING IN STEEL – 3"

   MINIMUM EDGE DISTANCE IN CONCRETE – 3"

   MINIMUM EDGE DISTANCE IN STEEL – 1/2"

   MINIMUM FASTENER DIAMETER UNLESS NOTED OR SPECIFIED OTHERWISE SHALL BE 0.17"

5. LIQUID ANCHORS – ACCEPTABLE PRODUCTS FOLLOW:

   HIT RE 500 EPOXY ADHESIVE ANCHOR FOR CONCRETE CONSTRUCTION AND HIT HY20 ANCHORING SYSTEM FOR MASONRY CONSTRUCTION, ALL MANUFACTURED BY HILTI.

   EPCON SYSTEM ANCHOR WITH CERAMIC EPOXY MANUFACTURED BY ITW RAMSET/REDHEAD

   CONFORM TO MANUFACTURER'S RECOMMENDATION FOR SPACING, EDGE DISTANCE AND EMBEDMENT LENGTH.

NOTE:
DETAILS AND NOTES ON THIS DRAWING APPLY TO ALL OTHER DRAWINGS WHERE SIMILAR CONDITIONS EXIST WHETHER OR NOT NOTED OR DETAILED.

KENNETH D. LATHRUM & ASSOCIATES, P.C.
STRUCTURAL ENGINEERING CONSULTANT
1901 N. 81st St, OMAHA, NE 68114
(402) 391 - 5861 JOB#: 08033

CLH 2007-37

Revisions: | Date

© 2000 Calvin L. Hinz Architects P.C.

These plans are specifically designed for construction by Calvin L. Hinz Architects and are intended for no other purposes. Permission for use of this document in part or whole without written consent of Calvin L. Hinz Architects is prohibited.

IMPORTANT CONTRACTOR'S NOTE

1. ALL CONTRACTORS ARE RESPONSIBLE FOR REVIEWING ENTIRE SET OF DOCUMENTS TO DETERMINE THEIR FULL SCOPE OF WORK. CONTRACTOR SHALL NOT BE ALLOWED EXTRA COSTS DUE TO FAILURE TO REVIEW ENTIRE SET OF DOCUMENTS.
2.) ANY USE OF THESE ELECTRONIC DRAWINGS OR SCALING OF THE PRINTED DOCUMENTS ARE DONE SO AT THE CONTRACTORS RISK.

CLH Calvin L. Hinz ARCHITECTS, P.C.

Calvin L. Hinz Architects, P.C. CLH 2007-37
3705 North 200th Street
Elkhorn, Nebraska 68022
Phone:402.291.6941 Fax: 402.291.9193

Farris Engineering
11239 Chicago Circle
Omaha, Nebraska 68154
402.330.5900 402.330.5902

United Engineering
20507 Nicholas Circle, Suite 108
Elkhorn, Nebraska 68022
402.763.9475 402.763.9527

Kenneth D. Lathrum & Associates, P.C.
1901 N. 81st Street
Omaha, Nebraska 68114
402.391.5861

TYPICAL DETAILS AND NOTES

Construction Documents (100%) Submittal

Approved: ______ Date: ______
Approved: ______ Date: ______
Approved: ______ Date: ______

BUILDING SIX
RENOVATION PHASE FOUR /
ADDITION PHASE TWO

VAMC Omaha, NE

Date	Checked by	Drawn by
FEBRUARY 20, 2009	IWL	TMS

Project Number: Phase 2 and 4 of 636-07-134

Building Number: SIX

Drawing Number: S10.3

Dwg. 19 of 37

Office of Construction and Facilities Management

Department of Veterans Affairs