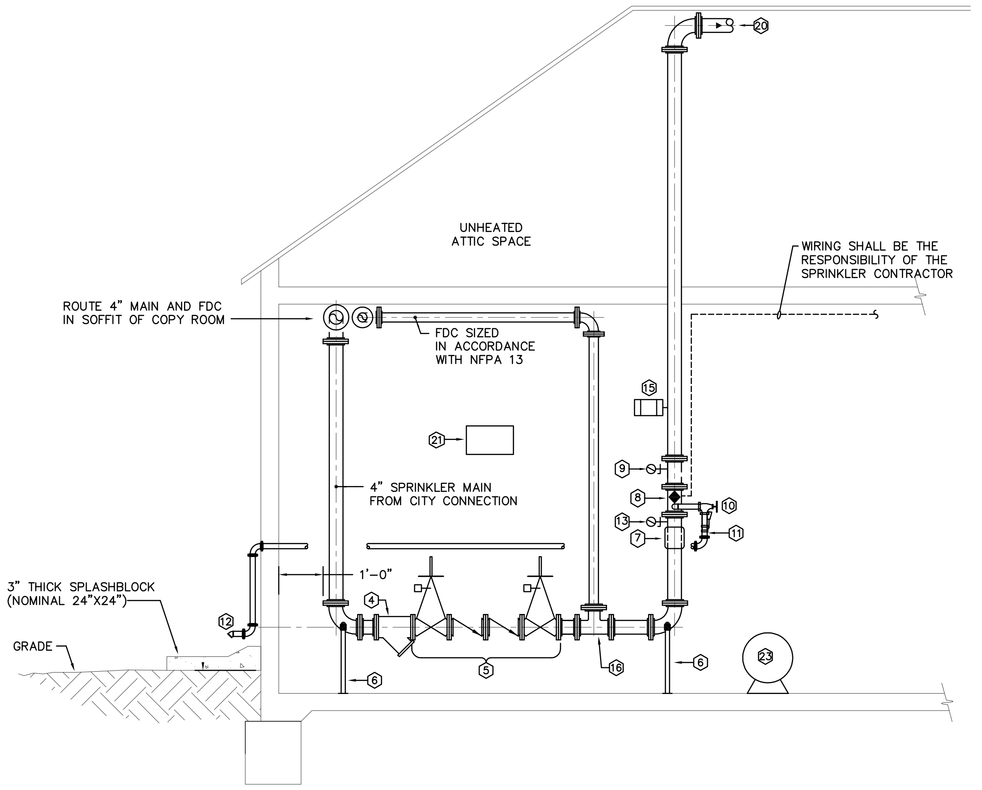

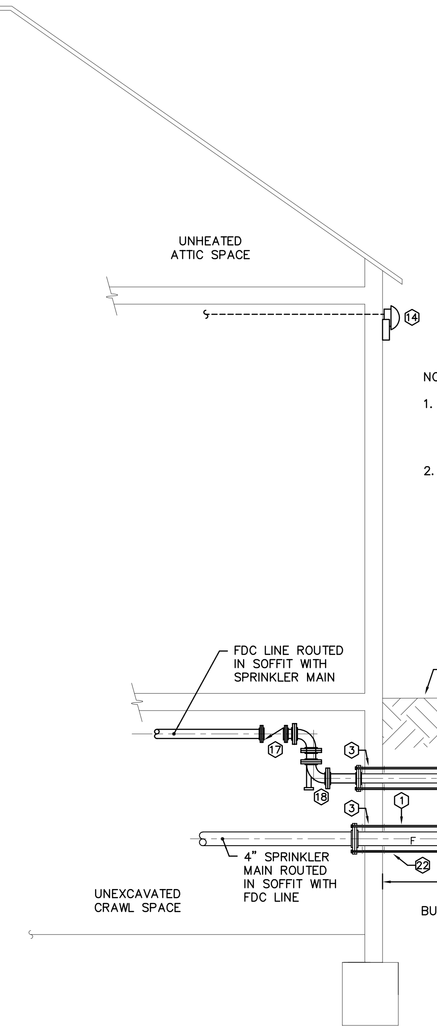

NOTES:

1. UNDERGROUND PIPING SHALL BE RESTRAINED JOINT SYSTEM PIPING. DETAIL SHOWS ONE OPTION FOR RESTRAINED JOINT SYSTEM (TIE RODS AND CONCRETE THRUST BLOCKS). ANY METHOD APPROVED IN NFPA 24 FOR A RESTRAINED JOINT SYSTEM IS ACCEPTABLE.
2. LOCATE PIV AND FDC 5'-0" FROM EACH OTHER AND PROTECT BOTH WITH BOLLARDS AS REQUIRED BY NFPA 24 AND 13 GUIDELINES. SEE BOLLARD DETAIL, DETAIL 3, ON THIS SHEET FOR BOLLARD REQUIREMENTS.

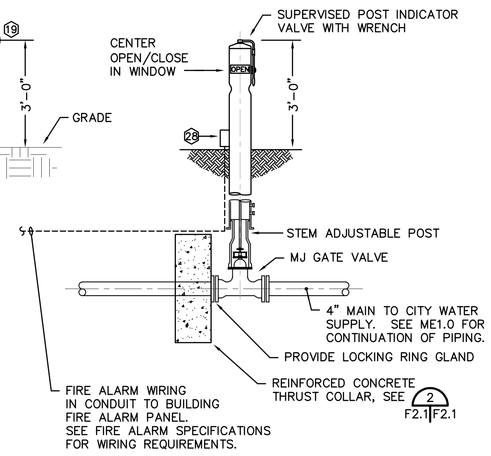

1. RESTRAIN CHANGE IN DIRECTION PER NFPA 24 (BY OTHERS) SEE DETAIL 1, ME1.0/ME1.0.
2. 4" MAIN FIRE WATER SUPPLY (BY OTHERS)
3. FLANGE WALL SLEEVE WITH MECHANICAL SEAL
4. STRAINER (AS REQUIRED BY AHJ)
5. DOUBLE CHECK VALVE BACKFLOW PREVENTER WITH TWO OS&Y GATE VALVES (WITH SUPERVISORY SWITCHES).
6. PIPE STAND AND SUPPORT
7. METAL SYSTEM DESIGN NAMEPLATE
8. ALARMED DRY VALVE ASSEMBLY
9. AIR PRESSURE GAUGE (TYP.)
10. MAIN DRAIN VALVE
11. MAIN DRAIN (FLOW TEST LINE)
12. 2" MAIN DRAIN
13. WATER PRESSURE GAUGE
14. ELECTRIC ALARM BELL
15. PRESSURE MAINTENANCE DEVICE
16. TEE CONNECTION (TYP.)
17. CHECK VALVE
18. BALL DRIP
19. PEDESTAL MOUNTED FIRE DEPARTMENT HOSE CONNECTION (FDC), SEE SHEET ME1.1 FOR LOCATION
20. DRY PIPE FIRE SUPPLY
21. SPARE SPRINKLER CABINET
22. MINIMUM 3/4" RODS FOR STRAPPING
23. DRY PIPE AIR COMPRESSOR

DRY PIPE FIRE SPRINKLER RISER DETAIL 1 X|X
NO SCALE

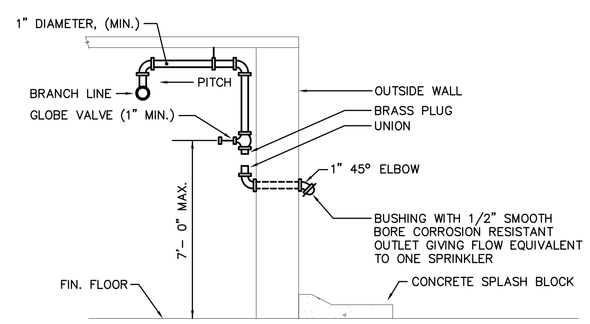

INSPECTORS TEST CONNECTION DETAIL FOR DRY PIPE SPRINKLER SYSTEM 4
NO SCALE F1.1|F2.1

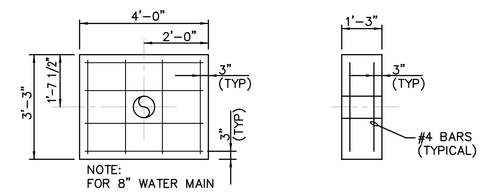

REINFORCED CONCRETE THRUST COLLAR DETAIL 2
NO SCALE F2.1|F2.1

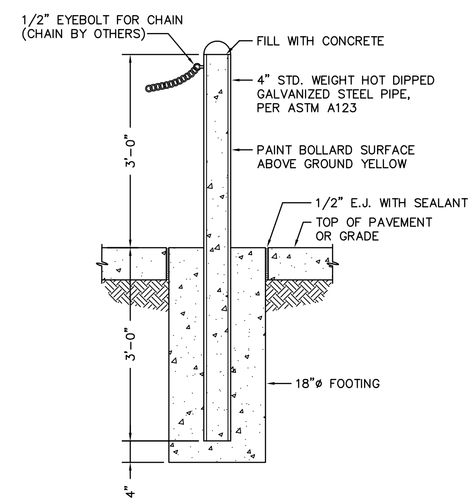

BOLLARD DETAIL 3
SCALE: 3/4 INCH = 1 FOOT ME1.0|F2.1

12" 6" 0 1' 2'

SUPPLEMENTAL FIRE PROTECTION SYMBOL LEGEND
(AS APPLICABLE)

	SPRINKLER RISER
	SPRINKLER ZONE CONTROL VALVE ASSEMBLY
	OS&Y VALVE (SUPERVISED SHUT-OFF VALVE)
	INSPECTOR'S TEST VALVE
	DOUBLE CHECK BACKFLOW PREVENTER
	POST INDICATOR VALVE (PIV)
	PRESSURE REGULATING VALVE (PRV)
	HOSE VALVE
	VALVE IN PIT
	MAIN RISER TEST & DRAIN VALVE
	FLOW SWITCH
	PRESSURE GAUGE
	FIRE DEPARTMENT CONNECTION (FDC)
	FIRE HYDRANT
SM	SPRINKLER MAIN
F	FIRE SPRINKLER PIPE
FDC	FIRE DEPARTMENT CONNECTION PIPE
	EXPOSED SIDEWALL (ON LINE)
	EXPOSED SIDEWALL WITH GUARD
	EXTENDED COVERAGE EXPOSED SIDEWALL
	RECESSED SIDEWALL (ON WALL)
	EXTENDED COVERAGE RECESSED SIDEWALL
	DRY SIDEWALL
	EXPOSED UPRIGHT
	EXPOSED UPRIGHT WITH GUARD
	EXTENDED COVERAGE EXPOSED UPRIGHT
	EXPOSED PENDENT
	EXPOSED PENDENT WITH GUARD
	EXTENDED COVERAGE EXPOSED PENDENT
	CONCEALED PENDENT
	EXTENDED COVERAGE CONCEALED PENDENT
	RECESSED PENDENT
	EXTENDED COVERAGE RECESSED PENDENT
	DRY PENDENT

FIRE PROTECTION GENERAL NOTES:

1. THESE NOTES APPLY TO ALL FIRE PROTECTION SPRINKLER WORK ON THE PROJECT.
2. FIRE PROTECTION WORK SHALL INCLUDE, BUT NOT LIMITED TO, THE FOLLOWING:

   A. A COMPLETE AND OPERABLE SYSTEM IN COMPLIANCE WITH ALL APPLICABLE STATE AND LOCAL CODES, LAWS AND REGULATIONS INCLUDING ALL PIPING AND ALL VALVES, ETC. PROVIDE FIRE PROTECTION RISERS INCLUDING VALVES, ALARM, AND INSPECTOR'S TEST CONNECTION.

   B. ALL AREAS OF THE BUILDING INDICATED SHALL BE SPRINKLERED ACCORDING TO THE LATEST EDITION OF APPLICABLE NFPA STANDARDS, SPECIFICALLY NFPA 13. ENTIRE SYSTEM SHALL BE INSTALLED PER VA REQUIREMENTS, NEBRASKA STATE FIRE MARSHAL REQUIREMENTS AND REQUIREMENTS OF THE CITY OF OMAHA FIRE DEPARTMENT.

   C. DESIGN SHALL BE BASED ON HYDRAULIC CALCULATIONS PER NFPA 13, WITH SHOP DRAWINGS PREPARED ACCORDING TO THE REQUIREMENTS OF THE NEBRASKA STATE FIRE MARSHAL.
3. DRAWINGS ARE DIAGRAMMATIC, INTENDED TO CONVEY THE SCOPE OF WORK AND GENERAL ARRANGEMENT OF THE SYSTEM. COORDINATE THE SPRINKLER SYSTEM LAYOUT WITH ALL ARCHITECTURAL, STRUCTURAL, HVAC, PLUMBING AND ELECTRICAL COMPONENTS. PROVIDE OFFSETS AS NECESSARY TO AVOID CONFLICTS.
4. THE LAYOUT SHOWN IS TO DEPICT THE APPROXIMATE ROUTING OF PIPE AND THE GENERAL AREAS TO BE SERVED. THE EXACT NUMBER, TYPE, COVERAGE, ETC., OF SPRINKLERS SHALL BE DETERMINED BY THE CONTRACTOR AND SHALL BE SUBJECT TO APPROVAL BY ALL AUTHORITIES HAVING JURISDICTION.
5. EXTEND A 4" PIPE THROUGH WALL FOR FIRE DEPARTMENT CONNECTION (FDC). FDC SHALL BE PEDESTAL MOUNTED AND INSTALLED 3'-0" ABOVE GRADE. PROVIDE HOSE CONNECTION THREADS TO MATCH LOCAL FIRE DEPARTMENT REQUIREMENTS. PROVIDE BRONZE FINISH ON FDC. SEE PLANS FOR LOCATION OF FDC.
6. REFER TO ARCHITECTURAL PLANS FOR CEILING TYPES AND HEIGHTS, AND LOCATIONS OF EXPOSED STRUCTURE. COORDINATE ALL SPRINKLER LOCATIONS IN AS AESTHETIC SPACING AS POSSIBLE. CONTRACTOR SHALL ALSO CONFIRM EXISTING CEILING LOCATIONS. REVIEW SPRINKLER PLANS WITH ARCHITECT/ENGINEER BEFORE INSTALLATION.
7. ALL PIPING AND SPRINKLERS IN EXPOSED AREAS SHALL BE COORDINATED WITH DUCTWORK AND LIGHTS. EXPOSED SPRINKLERS SHALL BE UPRIGHT UNLESS SPECIFICALLY SHOWN OTHERWISE ON THE DRAWINGS. PROVIDE ADDITIONAL SPRINKLERS AS NECESSARY.
8. ALL SPRINKLERS IN GYP. BOARD CEILINGS SHALL BE RECESSED PENDENT TYPE WITH WHITE FINISH, UNLESS NOTED OTHERWISE. ALL SPRINKLERS IN SOFFITS SHALL BE RECESSED SIDEWALLS WITH WHITE FINISH, UNLESS NOTED OTHERWISE.
9. PROVIDE AUXILIARY DRAINS FOR ALL LOW SPOTS, TYPICAL.
10. SPRINKLER TYPES AND LOCATIONS, AND SPRINKLER PIPING SHOWN FOR AESTHETIC AND COORDINATION PURPOSES. ACTUAL SYSTEM LAYOUT SHALL BE BASED ON HYDRAULIC DESIGN AND SHOP DRAWINGS. SPRINKLERS SHOWN ADJACENT TO AIR OUTLETS/INLETS AND LIGHT FIXTURES SHALL BE LOCATED 6" MINIMUM FROM BOTH. ALL SPRINKLERS IN LAY-IN CEILINGS SHALL BE INSTALLED WITHIN 3" OF THE CENTER OF CEILING TILE. NOTIFY ARCHITECT/ENGINEER OF CONFLICTS.
11. SEE SPECIFICATION SECTIONS 21 05 11 AND 21 10 00 FOR OTHER REQUIREMENTS.
12. SPRINKLER CONTRACTOR TO DETERMINE AVAILABLE WATER PRESSURES AND FLOW FROM LOCAL WATER DEPARTMENT. CONTRACTOR SHALL SUBMIT HYDRANT FLOW TEST DATA THAT IS NOT MORE THAN ONE YEAR OLDER THAN THE DATE OF SHOP DRAWING SUBMITTAL.
13. FIRE DEPARTMENT INSPECTORS' TEST AND MAIN DRAIN SHALL BE PIPED THROUGH EXTERIOR WALL. LOCATE EACH DRAIN 1'-0" ABOVE GRADE. PROVIDE A CONCRETE SPLASH BLOCK BELOW OUTLET ON GRADE.
14. SPRINKLER CONTRACTOR SHALL COORDINATE ALL CEILING HEIGHTS WITH GENERAL CONTRACTOR BEFORE MAKING FINAL PIPE DROPS TO SPRINKLERS. A COST EXTRA IS NOT ACCEPTED IF CEILING HEIGHTS CHANGE.
15. ALL EXPOSED PIPING SHALL BE PAINTED. SPRINKLER INSTALLER SHALL BE RESPONSIBLE FOR THE PAINTING OF ALL EXPOSED PIPING. PAINT COLOR TO MATCH CEILING FINISH IN AREA OF PIPE. PROVIDE PIPE MATERIAL ACCEPTABLE FOR PAINTING.
16. PIPE WITH GROOVED FITTINGS WILL ONLY BE ALLOWED IN THE FOLLOWING AREAS: MECHANICAL ROOMS, STORAGE ROOMS, AND AREAS WHERE PIPE IS ABOVE A FINISHED CEILING. IN ALL OTHER AREAS WHERE THE PIPE IS EXPOSED, PIPE FITTINGS SHALL BE THREADED OR WELDED TYPE.
17. APPLICABLE UL CONSTRUCTION DETAILS SHALL BE USED WHERE RATED ASSEMBLIES ARE PENETRATED BY SPRINKLER PIPING SYSTEM.
18. PIPE OPENINGS THROUGH FIRE RATED WALLS SHALL BE CAULKED WITH A FIRE RETARDANT INTUMESCENT MATERIAL. SEE SPECIFICATIONS.
19. PROVIDE SPRINKLER PROTECTION BELOW ALL DUCTS 4'-0" AND GREATER, AS REQUIRED BY THE LATEST EDITION OF NFPA 13.
20. ROUTE SPRINKLER PIPING AS HIGH AS POSSIBLE THROUGHOUT STRUCTURE, UNLESS SPECIFICALLY NOTED OTHERWISE ON DRAWINGS.
21. SUPPORT ALL PIPING FROM STRUCTURE.
22. COORDINATE WITH MECHANICAL HVAC WORK. DO NOT INSTALL SPRINKLER PIPING BELOW MECHANICAL EQUIPMENT OR WITHIN CLEARANCE SPACES FOR MECHANICAL EQUIPMENT.
23. ALL HOLES FOR PIPING AND CONDUIT SHALL BE DRILLED OR CORE DRILLED, NO BREAKING OF CONCRETE OR C.M.U. SHALL BE PERMITTED.
24. THE CONTRACTOR SHALL BE RESPONSIBLE FOR PATCHING, PAINTING, REPAIRING OR REPLACEMENT OF ALL WALLS, CEILINGS, OR OTHER BUILDING ELEMENTS WHICH ARE DISTURBED AS PART OF THE DEMOLITION OR INSTALLATION OF FIRE SPRINKLER WORK.
25. ENTIRE SPRINKLER SYSTEM SHALL BE A DRY PIPE SYSTEM. BUILDING HAS A WOOD ROOF WITH ATTIC SPACE. PROVIDE SPRINKLER PROTECTION IN ATTIC SPACE AS WELL AS THE MAIN PORTIONS OF THE BUILDING AS REQUIRED BY NFPA 13 GUIDELINES.
26. ENTIRE SPRINKLER INSTALLATION SHALL BE PROVIDED AS AN ADD ALTERNATE TO REMODEL AND ADDITION TO EXISTING STRUCTURE.
27. AIR COMPRESSOR SHALL BE HARD WIRED. PROVIDE WIRING REQUIREMENTS TO ELECTRICAL.
28. ALL PIPING SHALL BE ROUTED THROUGH UNHEATED ATTIC SPACE UNLESS SPECIFICALLY SHOWN DIFFERENTLY ON THE PLANS.

LEGEND

ORDINARY HAZARD GROUP 1 WITH A DESIGN DENSITY OF 0.15 GPM PER SF OVER 1500 SF.

ROOM SHALL BE PROTECTED WITH CORROSION/HUMIDITY RESISTANT SPRINKLERS.

GENERAL DESIGN NOTES:

1. AS PART OF ADD ALTERNATE BID, ENTIRE BUILDING SHALL BE PROTECTED WITH A DRY PIPE SPRINKLER SYSTEM UNLESS SPECIFICALLY STATED OTHERWISE. GROSS SPRINKLER DESIGN AREA FOR THIS BUILDING IS APPROXIMATELY 7580 GSF ON THE MAIN FLOOR, 7580 GSF IN THE ATTIC SPACE AND 250 GSF ON THE BASEMENT LEVEL OF THE BUILDING.
2. BUILDING SHALL BE DESIGNED FOR LIGHT HAZARD WITH A DESIGN DENSITY OF 0.10 GPM PER SF OVER 1500 SF, UNLESS SPECIFICALLY STATED OTHERWISE.

Revisions: Date

FARRIS ENGINEERING CONSULTING ENGINEERS
•OMAHA, NE.
•COLORADO SPRINGS, CO.
•LINCOLN, NE.
•DES MOINES, IA.
COPYRIGHT FEI # 072163
This document and the information contained may not be reproduced or excerpted from without the express written permission of Farris Engineering, Inc. Unauthorized copying, disclosure or construction use are prohibited by the copyright law.

IMPORTANT CONTRACTOR'S NOTE

1. ALL CONTRACTORS ARE RESPONSIBLE FOR REVIEWING ENTIRE SET OF DOCUMENTS TO DETERMINE THEIR FULL SCOPE OF WORK. CONTRACTOR SHALL NOT BE ALLOWED EXTRA COSTS DUE TO FAILURE TO REVIEW ENTIRE SET OF DOCUMENTS.
2. ANY USE OF THESE ELECTRONIC DRAWINGS OR SCALING OF THE PRINTED DOCUMENTS ARE DONE SO AT THE CONTRACTORS RISK.

CLH Calvin L. Hinz ARCHITECTS, P.C.

Calvin L. Hinz Architects, P.C. CLH 2007-37
3705 North 200th Street
Elkhorn, Nebraska 68022
Phone:402.291.6941 Fax: 402.291.9193

Farris Engineering
11239 Chicago Circle
Omaha, Nebraska 68154
402.330.5900 402.330.5902

United Engineering
20507 Nicholas Circle, Suite 108
Elkhorn, Nebraska 68022
402.763.9475 402.763.9527

Kenneth D. Lathrum & Associates, P.C.
1901 N. 81st Street
Omaha, Nebraska 68114
402.391.5861

FIRE SPRINKLER DETAILS

Construction Documents (100%) Submittal
Approved: Date:
Approved: Date:
Approved: Date:

BUILDING SIX RENOVATION/ ADDITION

VAMC Omaha, NE

Date: FEBRUARY 20, 2009 | Checked by | Drawn by

Project Number: Phase 2 and 4 of 636-07-134
Building Number: SIX
Drawing Number: F2.1
Dwg. 24 of 37

CLH 2007-37

Office of Construction and Facilities Management
Department of Veterans Affairs

VA FORM 08-6231