MECHANICAL KEYNOTES: (◇)

1. 10/10 DUCT UP THROUGH ROOF TO EXHAUST HOOD.
2. 10/10 DUCT UP THROUGH ROOF TO EXHAUST FAN EF-1.
3. THE NEW SUPPLY AIR DUCTWORK SHALL CONNECT TO THE EXISTING ZONE DAMPERS AT THE EXISTING MULTI-ZONE AIR HANDLING UNIT.

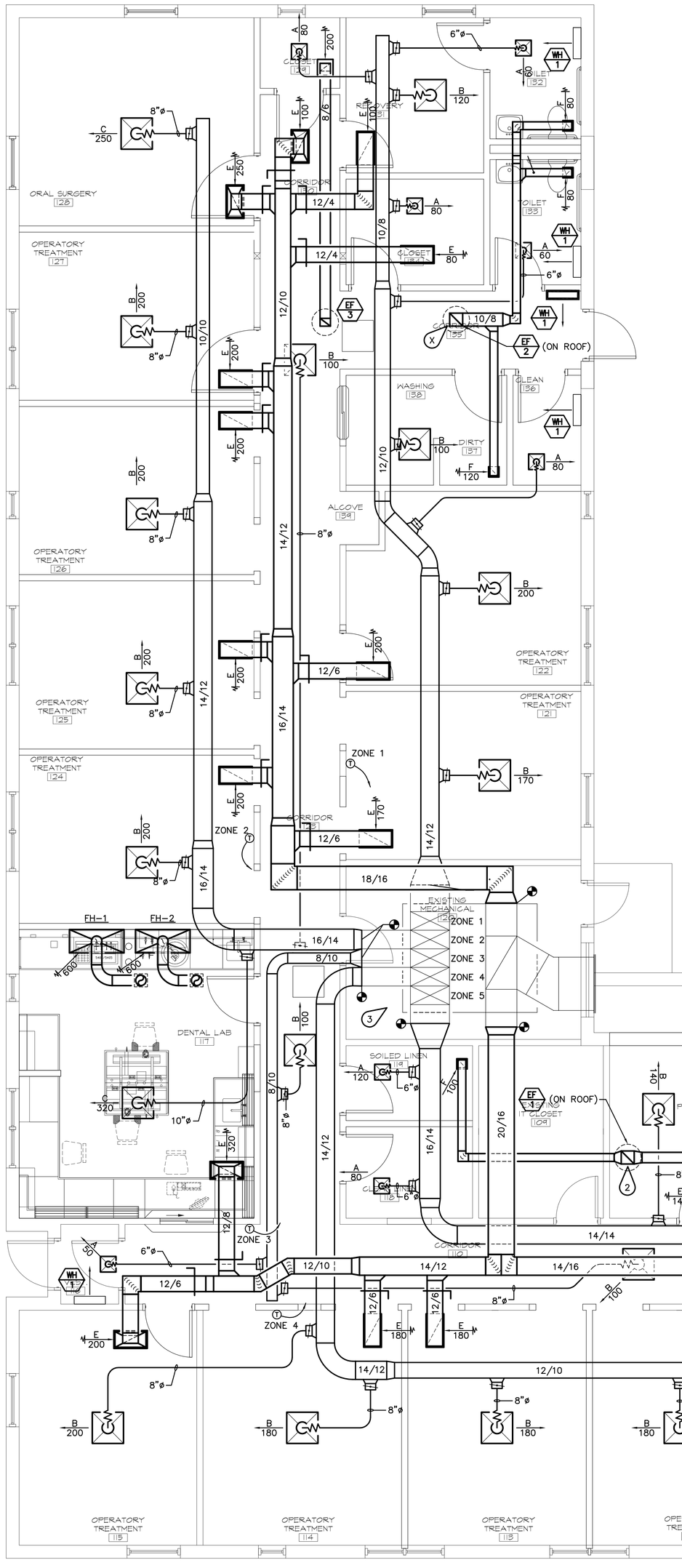

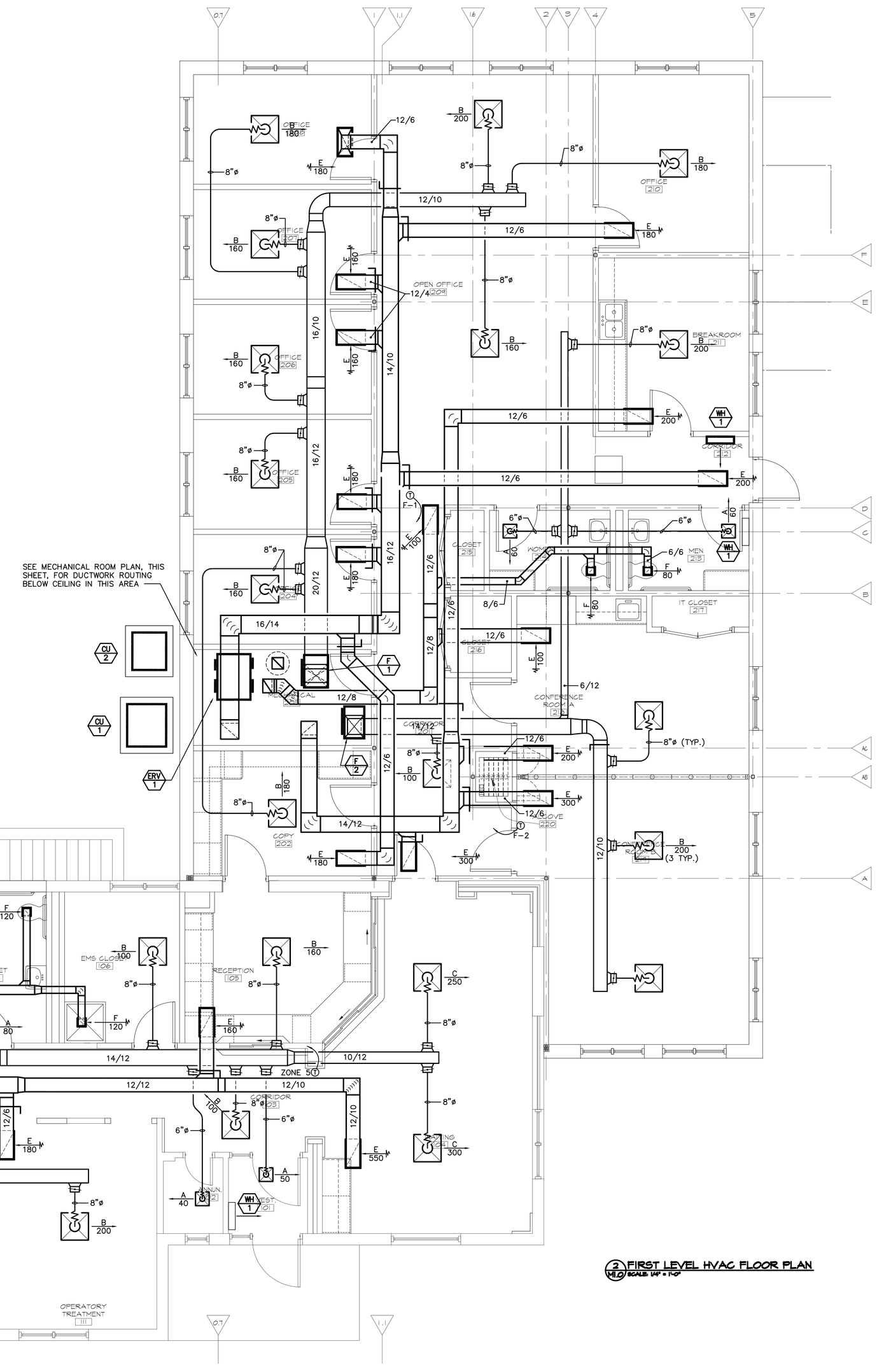

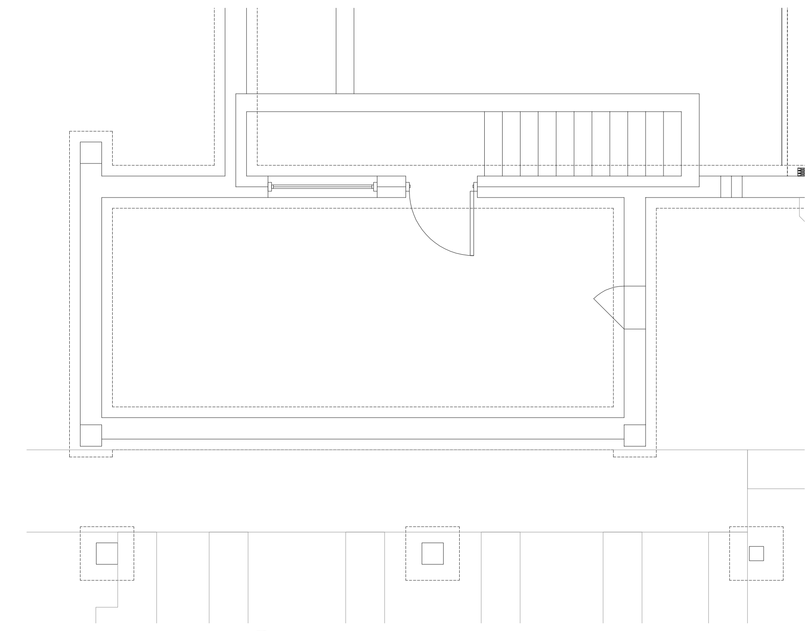

1 BASEMENT HVAC FLOOR PLAN
M1.0 SCALE: 1/4" = 1'-0"

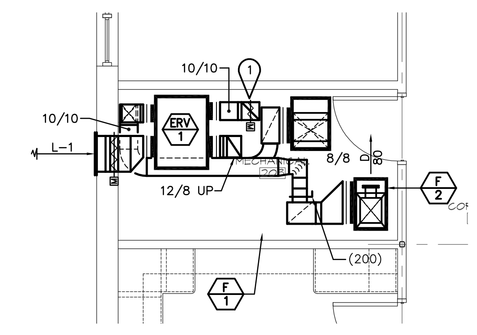

3 MECHANICAL 203 HVAC FLOOR PLAN
M1.0 SCALE: 1/4" = 1'-0"

2 FIRST LEVEL HVAC FLOOR PLAN
M1.0 SCALE: 1/4" = 1'-0"

Revisions	Date

FARRIS ENGINEERING CONSULTING ENGINEERS
•OMAHA, NE.
•COLORADO SPRINGS, CO.
•LINCOLN, NE.
•DES MOINES, IA.

COPYRIGHT FEI # 072163
This document and the information contained may not be reproduced or excerpted from without the express written permission of Farris Engineering, Inc. Unauthorized copying, disclosure or construction use are prohibited by the copyright law.

IMPORTANT CONTRACTOR'S NOTE

1. ALL CONTRACTORS ARE RESPONSIBLE FOR REVIEWING ENTIRE SET OF DOCUMENTS TO DETERMINE THEIR FULL SCOPE OF WORK. CONTRACTOR SHALL NOT BE ALLOWED EXTRA COSTS DUE TO FAILURE TO REVIEW ENTIRE SET OF DOCUMENTS.
2. ANY USE OF THESE ELECTRONIC DRAWINGS OR SCALING OF THE PRINTED DOCUMENTS ARE DONE SO AT THE CONTRACTORS RISK.

CLH Calvin L. Hinz ARCHITECTS, P.C.

Calvin L. Hinz Architects, P.C. CLH 2007-37
3705 North 200th Street
Elkhorn, Nebraska 68022
Phone:402.291.6941 Fax: 402.291.9193

Farris Engineering
11259 Chicago Circle
Omaha, Nebraska 68154
402.330.5900 402.330.5902

United Engineering
20507 Nicholas Circle, Suite 108
Elkhorn, Nebraska 68022
402.763.9475 402.763.9527

Kenneth D. Lathrum & Associates, P.C.
1901 N. 61st Street
Omaha, Nebraska 68114
402.391.5861

BASEMENT AND FIRST LEVEL HVAC FLOOR PLANS

Construction Documents (100%) Submittal
Approved: _____ Date: _____
Approved: _____ Date: _____
Approved: _____ Date: _____

BUILDING SIX RENOVATION/ ADDITION

VAMC Omaha, NE

Date	Checked by	Drawn by
FEBRUARY 20, 2009		

Project Number: Phase 2 and 4 of 636-07-134
Building Number: SIX
Drawing Number: M1.0
Dwg. 32 of 37

CLH 2007-37

Office of Construction and Facilities Management
Department of Veterans Affairs

VA FORM 08-6231