AIR HANDLING SYSTEM CONTROLS SCHEDULE

AIR HANDLING UNIT NO.	AREA SERVED NO.	AREA SERVED DESCRIPTION	FIRE ALARM ZONE NO.	DCP NO.	CONTROL TYPE NO.	FAN CONTROL INTERLOCKS RET. AIR	FAN CONTROL INTERLOCKS EXHAUST AIR	SA – RA CFM DIFF	"SPS-1" IN. H_2O	"T-1" °F	CONTROL VALVE CLG.COIL	CONTROL VALVE HTG.COIL	INTERST. SMOKE VENT DPRS. VENT(NC)	INTERST. SMOKE VENT DPRS. RA (NO)	INTERST. SMOKE VENT DPRS. REL.(NC)
100–AH1	8F	SPD	BFA–5	DCP–B–5	6	—	100–EF3,90,91,92	—	1.6	64	2–WAY	2–WAY	—	—	—
100–AH2	8F	BLDG.MANGT.	BFA–5	DCP–B–5	3	100–RF2	100–EF74,79	1550	1.8	64	2–WAY	2–WAY	—	—	—
100–AH3	8G	LAUNDRY	BFA–6	DCP–B–6	8	100–RF3	100–EF34,107,108,136,137,140	—	1.5	65	3–WAY	3–WAY	—	—	—
100–AH4	8G	DATA PROC.	BFA–6	DCP–B–6	3	100–RF4	100–EF109	3800	1.3	64	2–WAY	2–WAY	—	—	—
100–AH5	8E	WAREHOUSE	BFA–7	DCP–B–7	12	100–RF5		860	—	64	2–WAY	2–WAY	—	—	—
100–AH5A	8E	WAREHOUSE	BFA–7	DCP–B–7	10	100–RF5A		0	—	64	2–WAY	2–WAY	—	—	—
100–AH6	8G	DIETETICS	BFA–6	DCP–B–8	14	100–RF6	100–EF4,112,113,114	SEE NOTE 1	1.3	63	2–WAY	2–WAY	—	—	—
100–AH7	1M	MRI/NUC.MED	1FA–8	DCP–B–8	3	100–RF7		190	1.4	61	2–WAY	2–WAY	SVD7–1	SVD7–2	SVD7–3
100–AH8	8J	FUTURE	BFA–9	DCP–B–9				FUTURE							
100–AH9	8K	RAD/MED.REC.	BFA–10	DCP–B–10	1	100–RF9	100–EF6	SEE NOTE 2	1.2	64	2–WAY	2–WAY	SVD9–1	SVD9–2	SVD9–3
100–AH10	8L	FUTURE	BFA–11	DCP–B–11				FUTURE							
100–AH11	1A	SCI NU	1FA–1	DCP–1–1	3	100–RF11		4250	1.2	58	2–WAY	2–WAY	SVD11–1	SVD11–2	SVD11–3
100–AH12	1A	NU BEDRMS.	1FA–1	DCP–1–1	2	—	100–EF8	—	—	53	2–WAY	2–WAY	—	—	—
100–AH13	1B	SCI NU	1FA–2	DCP–1–2	1	100–RF13		6560	1.9	58	2–WAY	2–WAY	SVD13–1	SVD13–2	SVD13–3
100–AH14	1B	NU BEDRMS.	1FA–2	DCP–1–2	2	—	100–EF9	—	—	53	2–WAY	2–WAY	—	—	—
100–AH15	1C	NHC NU	1FA–3	DCP–1–3	3	100–RF15		1710	2.0	59	2–WAY	2–WAY	SVD15–1	SVD15–2	SVD15–3
100–AH16	1C	NU BEDRMS.	1FA–3	DCP–1–3	2	—	100–EF10	—	—	53	2–WAY	2–WAY	—	—	—
100–AH17	1D	NHC NU	1FA–4	DCP–1–4	3	100–RF17		2370	1.6	59	2–WAY	2–WAY	SVD17–1	SVD17–2	SVD17–3
100–AH18	1D	NU BEDRMS.	1FA–4	DCP–1–4	2	—	100–EF11	—	—	53	2–WAY	2–WAY	—	—	—
100–AH19	1A	THER. POOL	1FA–1	DCP–1–4A	7	100–RF19		1000	—	66	2–WAY	2–WAY	—	—	—
100–AH20	1F	DERM/OP.PHAR	1FA–5	DCP–1–5	1	100–RF20	100–EF12	1000	1.0	58	2–WAY	3–WAY	SVD20–1	SVD20–2	SVD20–3
100–AH21	1G	CANTEEN	1FA–6	DCP–1–6	1	100–RF21	100–EF13,125,126	15060	1.7	62	2–WAY	2–WAY	SVD21–1	SVD21–2	SVD21–3
100–AH22	1E	DAY TREATMT.	1FA–7	DCP–1–7	1	100–RF22	100–EF14	1960	1.5	62	2–WAY	2–WAY	SVD22–1	SVD22–2	SVD22–3
100–AH23	1H	NUC.MED/EYE	1FA–8	DCP–1–8	1	100–RF23	100–EF15	4440	1.6	64	2–WAY	2–WAY	SVD23–1	SVD23–2	SVD23–3
100–AH24	1J	AMBUL.CARE	1FA–9	DCP–1–9	1	100–RF24	100–EF17	4840	1.3	63	2–WAY	2–WAY	SVD24–1	SVD24–2	SVD24–3
100–AH25	1K	AMBUL.CARE	1FA–10	DCP–1–10	3	100–RF25	100–EF18	1000	1.2	60	2–WAY	2–WAY	SVD25–1	SVD25–2	SVD25–3
100–AH26	1L	A.C./OP RAD.	1FA–11	DCP–1–11	13	100–RF26	100–EF19	2170	1.7	63	2–WAY	2–WAY	SVD26–1	SVD26–2	SVD26–3
100–AH27	1N	AMBUL.CARE	1FA–12	DCP–1–12	1	100–RF27	100–EF20	1950	1.1	63	2–WAY	2–WAY	SVD27–1	SVD27–2	SVD27–3
100–AH28	2A	NEU. NU	2FA–1	DCP–2–1	3	100–RF28		1330	1.9	60	2–WAY	2–WAY	SVD28–1	SVD28–2	SVD28–3
100–AH29	2A	NU BEDRMS.	2FA–1	DCP–2–1	2	—	100–EF21	—	—	53	2–WAY	2–WAY	—	—	—
100–AH30	2B	REHAB.MED.NU	2FA–2	DCP–2–2	3	100–RF30		5010	1.4	59	2–WAY	2–WAY	SVD30–1	SVD30–2	SVD30–3
100–AH31	2B	NU BEDRMS.	2FA–2	DCP–2–2	2	—	100–EF22	—	—	53	2–WAY	2–WAY	—	—	—
100–AH32	2C	NHC NU	2FA–3	DCP–2–3	3	100–RF32		530	1.5	58	2–WAY	2–WAY	SVD32–1	SVD32–2	SVD32–3
100–AH33	2C	NU BEDRMS.	2FA–3	DCP–2–3	2	—	100–EF23	—	—	53	2–WAY	2–WAY	—	—	—
100–AH34	2D	NHC NU	2FA–4	DCP–2–4	3	100–RF34		760	1.7	59	2–WAY	2–WAY	SVD34–1	SVD34–2	SVD34–3
100–AH35	2D	NU BEDRMS.	2FA–4	DCP–2–4	2	—	100–EF24	—	—	53	2–WAY	2–WAY	—	—	—
100–AH36	2F	ENT/PHARM	2FA–5	DCP–2–5	1	100–RF36	100–EF25	2220	1.0	58	2–WAY	2–WAY	SVD36–1	SVD36–2	SVD36–3
100–AH37	2G	DENTAL	2FA–6	DCP–2–6	1	100–RF37	100–EF26	7660	1.6	64	2–WAY	2–WAY	SVD37–1	SVD37–2	SVD37–3
100–AH37A	2E	REHAB.MED.	2FA–7	DCP–2–7	3	100–RF37A	100–EF27	1000	1.2	59	2–WAY	2–WAY	SVD37A–1	SVD37A–2	SVD37A–3
100–AH38	2H	RADIOLOGY	2FA–8	DCP–2–8	1	100–RF38	100–EF28	1150	1.4	62	2–WAY	2–WAY	SVD38–1	SVD38–2	SVD38–3
100–AH39	2J	REH.MED/PROS	2FA–9	DCP–2–9	9	100–RF38		10880	1.5	60	2–WAY	3–WAY	SVD39–1	SVD39–2	SVD39–3
100–AH40	2K	VET.ASSIST.	2FA–10	DCP–2–10	3	100–RF40	100–EF30	630	1.7	60	2–WAY	2–WAY	SVD40–1	SVD40–2	SVD40–3
100–AH41	2L	RADIOLOGY	2FA–11	DCP–2–11	13	100–RF41	100–EF31	2220	2.0	57	2–WAY	2–WAY	SVD41–1	SVD41–2	SVD41–3
100–AH42	3A	GEN.MED.NU	3FA–1	DCP–3–1	3	100–RF42		4180	1.2	58	2–WAY	2–WAY	SVD42–1	SVD42–2	SVD42–3
100–AH43	3A	NU BEDRMS.	3FA–1	DCP–3–1	2	—	100–EF32	—	—	53	2–WAY	2–WAY	—	—	—
100–AH44	3B	GEN.MED.NU	3FA–2	DCP–3–2	3	100–RF44		6630	1.5	59	2–WAY	2–WAY	SVD–44–1	SVD44–2	SVD44–3
100–AH45	3B	NU BEDRMS.	3FA–2	DCP–3–2	2	—	100–EF33	—	—	53	2–WAY	2–WAY	—	—	—
100–AH46	3C	GEN.MED.NU	3FA–3	DCP–3–3	3	100–RF46		4180	1.2	59	2–WAY	2–WAY	SVD46–1	SVD46–2	SVD46–3
100–AH47	3C	NU BEDRMS.	3FA–3	DCP–3–3	2	—	100–EF34	—	—	53	2–WAY	2–WAY	—	—	—
100–AH48	3D	GEN.MED.NU	3FA–4	DCP–3–4	3	100–RF48		1460	1.8	59	2–WAY	2–WAY	SVD48–1	SVD48–2	SVD48–3

AIR HANDLING SYSTEM CONTROLS SCHEDULE

AIR HANDLING UNIT NO.	AREA SERVED NO.	AREA SERVED DESCRIPTION	FIRE ALARM ZONE NO.	DCP NO.	CONTROL TYPE NO.	FAN CONTROL INTERLOCKS RET. AIR	FAN CONTROL INTERLOCKS EXHAUST AIR	SA – RA CFM DIFF	"SPS-1" IN. H_2O	"T-1" °F	CONTROL VALVE CLG.COIL	CONTROL VALVE HTG.COIL	INTERST. SMOKE VENT DPRS. VENT(NC)	INTERST. SMOKE VENT DPRS. RA (NO)	INTERST. SMOKE VENT DPRS. REL.(NC)
100–AH49	3D	NU BEDRMS	3FA–4	DCP–3–4	2	—	100–EF35	—	—	53	2–WAY	2–WAY	—	—	—
100–AH50	3F	LAB SERVICE	3FA–5	DCP–3–5	4	—	100–EF36	—	1.6	64	2–WAY	2–WAY	SVD51–1	SVD51–2	SVD51–3
100–AH51	3G	DIG.DISEASE	3FA–6	DCP–3–6	1	100–RF51	100–EF37	6970	1.7	64	2–WAY	2–WAY	SVD52–1	SVD52–2	SVD52–3
100–AH52	3E	LAB/DIALYSIS	3FA–7	DCP–3–7	1	100–RF52	100–EF38	1840	1.6	63	2–WAY	2–WAY	SVD53–1	SVD53–2	SVD53–3
100–AH53	3H	CARD/RESP	3FA–8	DCP–3–8	1	100–RF53	100–EF39	2310	1.5	64	2–WAY	2–WAY	—	—	—
100–AH54	3K	LAB SERVICE	3FA–10	DCP–3–10	4	—	100–EF70	—	1.2	64	2–WAY	2–WAY	—	—	—
100–AH55	3L	MICU/CICU NU	3FA–11	DCP–3–11	3	100–RF55		1090	1.9	60	2–WAY	3–WAY	SVD55–1	SVD55–2	SVD55–3
100–AH56	3L	NU BEDRMS	3FA–11	DCP–3–11	2	—	100–EF42	—	—	53	2–WAY	2–WAY	—	—	—
100–AH57	4A	GEN.MED.NU	4FA–1	DCP–4–1	3	100–RF57		7990	1.4	60	3–WAY	2–WAY	SVD57–1	SVD57–2	SVD57–3
100–AH58	4A	NU BEDRMS	4FA–1	DCP–4–1	2	—	100–EF43	—	—	53	2–WAY	2–WAY	—	—	—
100–AH59	4B	GEN.MED.NU	4FA–2	DCP–4–2	3	100–RF59		2410	1.8	59	2–WAY	2–WAY	SVD59–1	SVD59–2	SVD59–3
100–AH60	4B	NU BEDRMS	4FA–2	DCP–4–2	2	—	100–EF44	—	—	53	2–WAY	2–WAY	—	—	—
100–AH61	4C	INTERMED.NU	4FA–3	DCP–4–3	3	100–RF61		1820	1.6	59	2–WAY	2–WAY	SVD61–1	SVD61–2	SVD61–3
100–AH62	4C	NU BEDRMS	4FA–3	DCP–4–3	2	—	100–EF45	—	—	53	2–WAY	2–WAY	—	—	—
100–AH63	4D	INTERMED.NU	4FA–4	DCP–4–4	3	100–RF63		1700	1.6	60	2–WAY	2–WAY	SVD63–1	SVD63–2	SVD63–3
100–AH64	4D	NU BEDRMS	4FA–4	DCP–4–4	2	—	100–EF46	—	—	53	2–WAY	2–WAY	—	—	—
100–AH65	4F	ADMINISTRATION	4FA–5	DCP–4–5	1	100–RF65	100–EF47	1790	1.2	63	2–WAY	2–WAY	SVD65–1	SVD65–2	SVD65–3
100–AH66	4G	LIBRARY/EDUC.	4FA–6	DCP–4–6	1	100–RF66	100–EF48	1900	1.4	64	2–WAY	2–WAY	SVD66–1	SVD66–2	SVD66–3
100–AH67	4E	ADMINISTRATION	4FA–7	DCP–4–7	1	100–RF67	100–EF49	260	1.3	64	2–WAY	2–WAY	SVD67–1	SVD67–2	SVD67–3
100–AH68	4H	INTERMED.NU	4FA–8	DCP–4–8	3	100–RF68		1550	1.6	60	2–WAY	2–WAY	SVD68–1	SVD68–2	SVD68–3
100–AH69	4H	NU BEDRMS	4FA–8	DCP–4–8	2	—	100–EF50	—	—	53	2–WAY	2–WAY	—	—	—
100–AH70	4K	ADMINISTRATION	4FA–10	DCP–4–10	1	100–RF70	100–EF51	150	1.4	62	2–WAY	2–WAY	SVD70–1	SVD70–2	SVD70–3
100–AH71	5A	GEN.SURG.NU	5FA–1	DCP–5–1	3	100–RF71		1490	1.4	59	2–WAY	2–WAY	SVD71–1	SVD71–2	SVD71–3
100–AH72	5A	NU BEDRMS	5FA–1	DCP–5–1	2	—	100–EF52	—	—	53	2–WAY	2–WAY	—	—	—
100–AH73	5B	GEN.SURG.NU	5FA–2	DCP–5–2	3	100–RF73		1220	1.6	58	2–WAY	2–WAY	SVD73–1	SVD73–2	SVD73–3
100–AH74	5B	NU BEDRMS	5FA–2	DCP–5–2	2	—	100–EF53	—	—	53	2–WAY	2–WAY	—	—	—
100–AH75	5C	GEN.SURG.NU	5FA–3	DCP–5–3	3	100–RF75		1460	1.2	59	2–WAY	2–WAY	SVD75–1	SVD75–2	SVD75–3
100–AH76	5C	NU BEDRMS	5FA–3	DCP–5–3	2	—	100–EF54	—	—	53	2–WAY	2–WAY	—	—	—
100–AH77	5D	NEUR.SURG.NU	5FA–4	DCP–5–4	3	100–RF77		1450	1.5	59	2–WAY	2–WAY	SVD77–1	SVD77–2	SVD77–3
100–AH78	5D	NU BEDRMS	5FA–4	DCP–5–4	2	—	100–EF55	—	—	53	2–WAY	2–WAY	—	—	—
100–AH79	5F	SURGERY–ORS	5FA–5	DCP–5–5	5	—	100–EF56,57	410	1.9		3–WAY	2–WAY	—	—	—
100–AH80	5G	SURG–ADMIN	5FA–6	DCP–5–6	1	100–RF80	100–EF59	1280	1.3	64	2–WAY	2–WAY	SVD80–1	SVD80–2	SVD80–3
100–AH81	5E	GEN.SURG.NU	5FA–7	DCP–5–7	3	100–RF81		460	1.7	59	2–WAY	3–WAY	SVD81–1	SVD81–2	SVD81–3
100–AH82	5E	NU BEDRMS	5FA–7	DCP–5–7	2	—	100–EF60	—	—	53	2–WAY	2–WAY	—	—	—
100–AH83	5H	GEN.SURG.NU	5FA–8	DCP–5–8	3	100–RF83		1100	1.6	59	2–WAY	3–WAY	SVD83–1	SVD83–2	SVD83–3
100–AH84	5H	NU BEDRMS	5FA–8	DCP–5–8	2	—	100–EF61	—	—	53	2–WAY	2–WAY	—	—	—
100–AH85	5K	SICU NU	5FA–10	DCP–5–10	3	100–RF85		2030	1.6	51	2–WAY	3–WAY	SVD85–1	SVD85–2	SVD85–3
100–AH86	5K	NU BEDRMS	5FA–10	DCP–5–10	2	—	100–EF62	—	—	53	2–WAY	2–WAY	—	—	—
100–AH87	6A	DRUG/ALCH NU	6FA–1	DCP–6–1	3	100–RF87		1980	1.5	57	3–WAY	3–WAY	SVD87–1	SVD87–2	SVD87–3
100–AH88	6A	NU BEDRMS	6FA–1	DCP–6–1	2	—	100–EF63	—	—	53	2–WAY	2–WAY	—	—	—
100–AH89	6B	DRUG/ALCH NU	6FA–2	DCP–6–2	3	100–RF89		2160	1.4	59	3–WAY	3–WAY	SVD89–1	SVD89–2	SVD89–3
100–AH90	6B	NU BEDRMS	6FA–2	DCP–6–2	2	—	100–EF64	—	—	53	2–WAY	2–WAY	—	—	—
100–AH91	6C	PSYCH NU	6FA–3	DCP–6–3	3	100–RF91		1770	1.9	59	3–WAY	3–WAY	SVD91–1	SVD91–2	SVD91–3
100–AH92	6C	NU BEDRMS	6FA–3	DCP–6–3	2	—	100–EF65	—	—	53	2–WAY	2–WAY	—	—	—
100–AH93	6D	PSYCH NU	6FA–4	DCP–6–4	3	100–RF93		1900	1.4	59	2–WAY	3–WAY	SVD93–1	SVD93–2	SVD93–3
100–AH94	6D	NU BEDRMS	6FA–4	DCP–6–4	2	—	100–EF66	—	—	53	2–WAY	2–WAY	—	—	—
100–AH95	6F	DRUG/ALCH NU	6FA–5	DCP–6–5	3	100–RF95		2790	1.8	59	3–WAY	3–WAY	SVD95–1	SVD95–2	SVD95–3
100–AH96	6F	NU BEDRMS	6FA–5	DCP–6–5	2	—	100–EF67	—	—	53	2–WAY	2–WAY	—	—	—
100–AH97	6G	SLEEP/RESRCH	6FA–6	DCP–6–6	3	100–RF97	100–EF68	2420	1.3	59	3–WAY	3–WAY	SVD97–1	SVD97–2	SVD97–3
100–AH98	5F	RECOVERY	5FA–5	DCP–7–1	1	100–RF98	100–EF77	2140	1.1	64	2–WAY	3–WAY	SVD98–1	SVD98–2	SVD98–3

NOTES:

1. SEE CONTROL DIAGRAM 12 FOR SA-RA CFM DIFFERENCES.
2. SA-RA/EXH CFM DIFFERENCES FOR 100-AH9 ARE AS FOLLOWS:
   A. AFM9-1 (SA) - AFM9-3 (EXH) = 1490 CFM
   B. AFM9-2 (SA) - AFM9-4 (RA) = 320 CFM
3. FOR HOT WATER CONTROL VALVE SIZE SEE AIR HANDLING UNIT SCHEDULE, SHEETS H-3 & H-4.

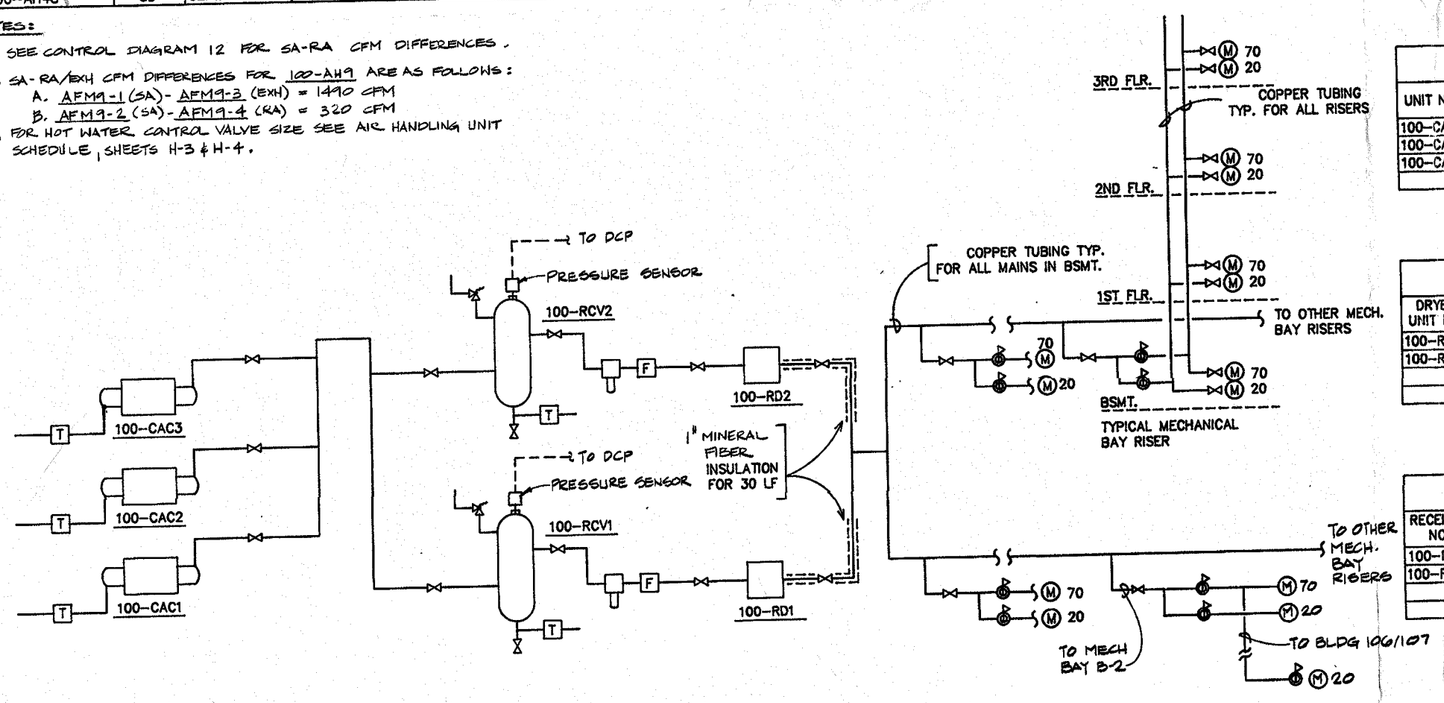

CONTROL AIR SYSTEM DIAGRAM
NOT TO SCALE

DUPLEX CONTROL AIR COMPRESSOR UNITS

UNIT NO.	LOCATION	SCFM	COMPRESSORS HP	COMPRESSORS PH	COMPRESSORS VOLTS	TANK CAP. GALLONS	PRESSURE PSIG
100–CAC1	MECH. BAY B–8	110	30	3	460		200
100–CAC2	MECH. BAY B–8	110	30	3	460		200
100–CAC3	MECH. BAY B–8	110	30	3	460		200

REFRIGERATED CONTROL AIR DRYERS

DRYER UNIT NO.	LOCATION	SCFM	HP	PH	VOLTS	REMARKS
100–RD1	MECH. BAY B–8	60	1	3	480	
100–RD2	MECH. BAY B–8	60	1	3	480	

CONTROL AIR RECEIVERS

RECEIVER NO.	LOCATION	TANK CAP. GALLONS	PRESSURE PSIG	REMARKS
100–RCV1	MECH. BAY B–8	1000	200	
100–RCV2	MECH. BAY B–8	1000	200	

GENERAL CONTROL NOTES

1. FIRE EMERGENCY OPERATION: WHEN NOTIFIED BY PHONE FROM THE BULDING 100 FIRE CONTROL CENTER, THE ECC OPERATOR SHALL ACTIVATE THE FIRE EMERGENCY OPERATION PROGRAM AND MANUALLY INPUT THE FIRE ALARM ZONE NUMBER AND MODE OF OPERATION REQUESTED. THE MODES OF OPERATION TO BE AVAILABLE FOR EACH AIR HANDLING SYSTEM, INCLUDING RELATED EXHAUST SYSTEMS, SHALL BE DEFINED AS FOLLOWS:
   A. SHUTDOWN: FUNCTIONS ARE THE SAME AS FOR AUTOMATIC SHUTDOWN BY UNIT SMOKE DETECTORS.
   B. PURGE: RETURN AIR SMOKE DAMPER IS CLOSED. NO AIR RECIRCULATION. SUPPLY AIR IS ALL OUTSIDE AIR, QUANTITY AS REQUIRED BY NORMAL TEMPERATURE CONTROL. ALL RETURN AIR IS RELIEVED. RETURN OR RELIEF AIR FANS ARE ON.
   C. SUPPLY ONLY: AIR HANDLING UNIT IS ON. RETURN OR RELIEF AIR FAN IS OFF. RETURN AIR SMOKE DAMPER IS CLOSED. EXHAUST FANS ARE OFF.
   D. EXHAUST ONLY: EXHAUST FANS ARE ON. RETURN AIR FAN IS ON. RETURN AIR SMOKE DAMPER IS CLOSED. AIR HANDLING UNIT IS OFF.
   E. INTERSTITIAL SMOKE VENT: ALL AIR MOVING EQUIPMENT FUNCTIONS AS REQUIRED BY LOCAL TEMPERATURE CONTROLS (DCP). RETURN AIR SMOKE VENT DAMPER, SVD–XX–2 (NORMALLY OPEN) IS CLOSED. INTERSTITIAL SMOKE VENT DAMPERS, SVD–XX–1 AND SVD–XX–3 (NORMALLY CLOSED) ARE OPEN. ALL SYSTEMS SERVING EITHER NORTH PART OR SOUTH PART OF A PARTICULAR FLOOR SHALL OPERATE TOGETHER WHEN THIS MODE IS REQUIRED FOR ANY ONE OF THESE SYSTEMS.
   F. NORMAL (RETURN TO NORMAL): ALL EQUIPMENT FUNCTIONS AS REQUIRED BY LOCAL TEMPERATURE CONTROLS (DCP).
2. FIRE EMERGENCY OPERATION MAY REQUIRE OVERRIDING THE NORMAL SHUTDOWN FUNCTION OF SYSTEM SMOKE DETECTORS.
3. THERE SHALL BE A MINIMUM OF ONE DCP CONTROL UNIT FOR EACH MECHANICAL BAY.
4. REFER TO SPECIFICATIONS FOR CONTROL REQUIREMENTS FOR PACKAGE COMPUTER ROOM UNITS (ACU).
5. FOR ADDITIONAL CONTROLS REFER TO "H" DRAWINGS FOR BLDGS 29, 104 & 106.
6. REFER TO DWG. NOS H-3 & H-4 FOR AIR HANDLER HEATING COIL CONTROL VALVE SIZES.

Revisions | Date

3D/INTERNATIONAL AND STONE, MARRACCINI AND PATTERSON
3D/I • SMP A JOINT VENTURE HOUSTON, TEXAS
1900 WEST LOOP SOUTH, SUITE 200 HOUSTON, TEXAS 77027 TELEPHONE (713) 871-7000

STRUCTURAL AND CIVIL : WALTER P. MOORE AND ASSOCIATES, INCORPORATED
MECHANICAL AND ELECTRICAL : YANDELL & HILLER, INC. AND 3D/INTERNATIONAL

STATE OF TEXAS — ROBERT J. BENTSON — 14340 — REGISTERED PROFESSIONAL ENGINEER
Robert J. Bentson 10/6/86

Drawing Title: CONTROL SCHEDULES, DIAGRAMS & GENERAL NOTES - HVAC
Approved Project Director: [signature]

Project Title: REPLACEMENT / MODERNIZATION MEDICAL CENTER
Building Number: 100 | Checked: LB | Drawn: RB/JB
Location: VAMC HOUSTON, TEXAS

Date: 2 JAN 1987
Project No.: 580-040
DRAWING NO.: 100-H1
Dwg 24 of 283

Veterans Administration