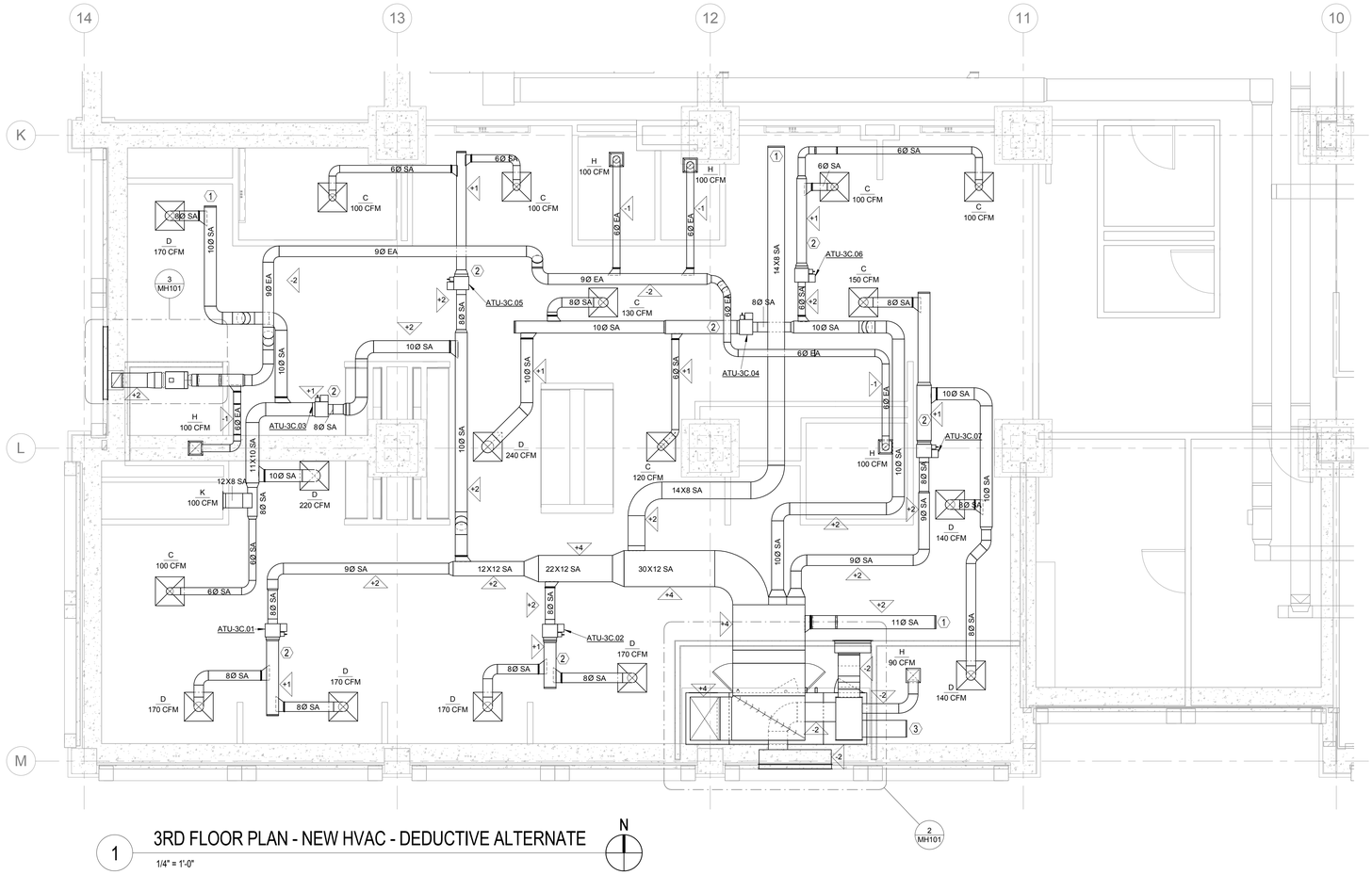

1 3RD FLOOR PLAN - NEW HVAC - DEDUCTIVE ALTERNATE

1/4" = 1'-0"

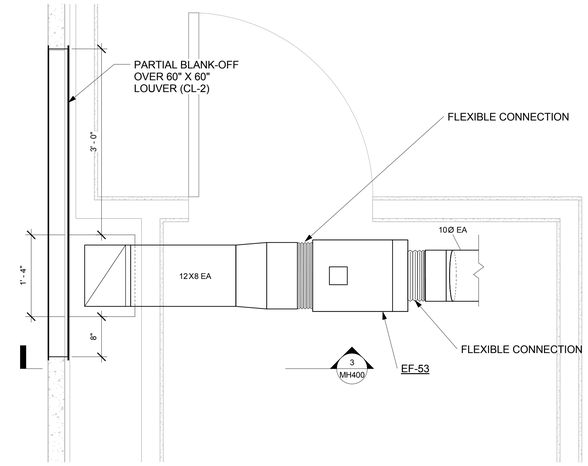

3 ENLARGED PARTIAL PLAN - EXHAUST FAN EF-53

1" = 1'-0"

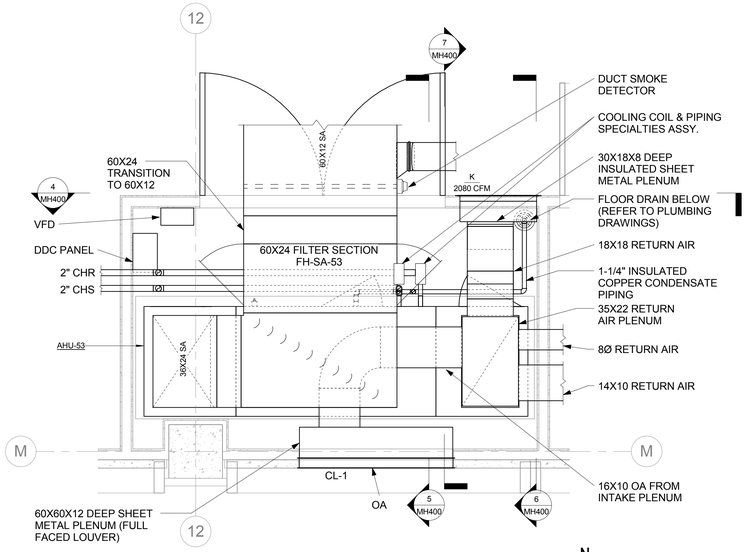

2 ENLARGED PARTIAL PLAN - MECH. RM. C306L-1

1/2" = 1'-0"

SHEET NOTES

1 PROVIDE MANUAL BALANCING DAMPERS FOR EACH INLET AND OUTLET SHOWN ON PLANS. ENSURE FULL ACCESSIBILITY TO DAMPER HANDLE.

2 REFER TO DETAILS FOR DUCT WORK PRESSURE CLASS REQUIREMENTS.

SHEET KEYNOTES

1 SUPPLY DUCT FOR FUTURE CONNECTION. CAP AND SEAL DUCT END AND ENSURE FULL ACCESSIBILITY.

2 SIZE SHEETMETAL DUCTWORK TO MATCH CONNECTION SIZE OF AIR TERMINAL UNIT OUTLET.

3 RETURN DUCT FOR FUTURE CONNECTION. CAP AND SEAL DUCT END AND ENSURE FULL ACCESSIBILITY.

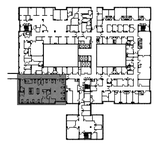

FINAL DESIGN
APPROVED FOR CONSTRUCTION

Revisions:	Date

CONSULTANTS:

Mark G. Hertz — Digitally signed by Mark G. Hertz Date: 2018.03.13 15:09:51 -04'00'

ENGINEER - OF - RECORD MARK G. HERTZ — FL. P.E. NO. 53279

MARK G. HERTZ LICENSE No. 53279 STATE OF FLORIDA PROFESSIONAL ENGINEER

ARCHITECT/ENGINEERS:

AKEA INC.
3603 NW 98th Street, Suite B
Gainesville, FL 32606
Phone: (352) 474-6124
Fax: (352) 474-6324
COA: FL #26693
AKEA Project No. 094-14

Drawing Title: THIRD FLOOR HVAC PLAN - NEW WORK - DEDUCTIVE ALTERNATE #1

Approved: Project Director

Project Title: RENOVATE WARD 3C FOR CARDIOLOGY EQUIPMENT INSTALLATION

Location: GAINESVILLE, FLORIDA

Date: MARCH 9, 2018 | Checked: MGH | Drawn: TJM

Project Number: 573-CSI-102

Building Number: 1

Drawing Number: MH101a

18 OF 62

Office of Construction and Facilities Management

Department of Veterans Affairs

VA FORM 08-6231