1. General: The air handling unit (AHU) and exhaust fan (EF) shall be managed for automatic operations through the energy control center (ECC). The variable frequency drive (VFD) switch for the supply fan shall be kept in the AUTO position. The HAND and OFF positions shall be used for maintenance only.

2. System Stop: Prior to the system being commanded to start, the ventilation control, discharge air temperature (DAT) control, and duct static pressure (DSP) control shall be suspended. The minimum outdoor air (OA) damper shall be fully closed. The associated smoke dampers shall be closed. The return air (RA) damper shall be fully open. The chilled water (CHW) valve shall be fully closed. The supply fan shall be deactivated.

3. System Start: Once commanded to start, the associated smoke dampers are to be fully opened and proven. Once proven, the supply fan shall start and ramp up to its minimum speed and hold for an operational time delay (OTD) of 5 minutes. During the OTD, the CHW control valve shall increase its position to maintain the initial DAT setpoint. Once the OTD has been completed, ventilation control, DAT control, and DSP control shall be released for standard operations.

4. Steady–State Operations (Ventilation Control): During steady–state operations, the OA and RA control dampers shall modulate in sequence to maintain the OA flow setpoint.

4.1. Increased Loading: If the OA flow has decreased to below its setpoint, the OA damper shall increase its position accordingly to maintain the OA flow setpoint. If the OA damper is fully open, the RA damper shall decrease its position to a minimum of 50% to maintain the OA flow setpoint.

4.2. Decreased Loading: If the OA flow has increased to above its setpoint, the OA damper shall decrease its position accordingly to maintain the OA flow setpoint. If the RA damper is not fully open, the RA damper shall increase to its fully–opened position before the OA damper position decreases.

5. Steady–State Operations (DAT Control): During steady–state operations, the CHW control valve shall modulate its position accordingly to maintain the DAT setpoint.

5.1. Increased Loading: If the DAT has increased to above its setpoint plus its deadband, the CHW valve shall increase its position accordingly to maintain the DAT setpoint.

5.2. Decreased Loading: If the DAT has decreased to below its setpoint minus its deadband, the CHW valve shall decrease its position accordingly to maintain the DAT setpoint.

5.3. Setpoint Management: The DAT setpoint shall be automatically reset to minimize the consumption of CHW flow.

5.3.1. Reset Up: If the CHW control valve command has increased to its scheduled upper–limit reset control value for 5–minutes, the DAT setpoint shall be reset down at a rate of 1 deg per 5–minutes.

5.3.2. Reset Down: If the CHW control valve command has decreased to its scheduled lower–limit reset control value for 5–minutes, the DAT setpoint shall be reset up at a rate of 1 deg per 5–minutes.

6. Steady–State Operations (DSP Control): During steady–state operations, the supply fan VFD shall modulate the fan speed accordingly to maintain the DSP setpoint.

6.1. Increased Loading: If the DSP has decreased to below its setpoint minus its deadband, the supply fan shall increase its speed accordingly to maintain the DSP setpoint.

6.2. Decreased Loading: If the DSP has increased to above its setpoint plus its deadband, the supply fan shall decrease its speed accordingly to maintain the DSP setpoint.

6.3. Setpoint Management: The DSP setpoint shall be automatically reset based on air terminal unit (ATU) damper commands to minimize the energy consumption of the supply fan.

6.3.1. Reset Up: If 3 of the associated ATUs have increased their damper commands to above 90% for 5–minutes, the DSP setpoint shall be reset up at a rate of 0.1 in–WC per minute.

6.3.2. Reset Down: If all of the associated ATUs have decreased their damper commands to below 80% for 5–minutes, the DSP setpoint shall be reset down at a rate of 0.1 in–WC per minute.

7. Exhaust Fan Operations: The associated exhaust fan shall be interlocked with the operation of the AHU.

8. Emergency Operations: Upon detection of any of the following emergency conditions, the ECC shall be notified based on its reporting delay.

8.1. Filters Loading Limit: If either of the filter sections reach their upper limit differential pressure sensor value for at least 5–minutes, the filters are dirty and need to be changed.

8.2. Supply Fan Failure Condition: If the command for the supply fan's operation is in conflict with its operational status for at least 5–minutes, the supply fan has failed. Deactivate the unit and exhaust fan.

8.3. Exhaust Fan Failure Condition: If the command for the exhaust fan's operation is in conflict with its operational status for at least 5–minutes, the exhaust fan has failed. Deactivate the unit and AHU.

8.4. High–Limit Return Air Relative Humidity: If the RA relative humidity sensor value increases to above its upper limit for at least 10–minutes, the DAT setpoint control shall be suspended and the DAT setpoint shall be immediately set to its minimum value and remain until the RA relative humidity decreases to below the upper limit minus 5%.

8.5. Low–Limit Mixed Air Temperature Condition: If the mixed air temperature sensor value decreases to below its lower limit for at least 5–minutes, an impending freezing condition approaches. Upon activation of the low–limit temperature switch, immediately deactivate the unit.

8.6. High Discharge Static Pressure Condition: Upon activation of the discharge air pressure switch, immediately deactivate the unit.

8.7. Smoke Detection: Upon detection of smoke in the system by any of its smoke detectors, the unit shall automatically deactivate through the fire alarm system.

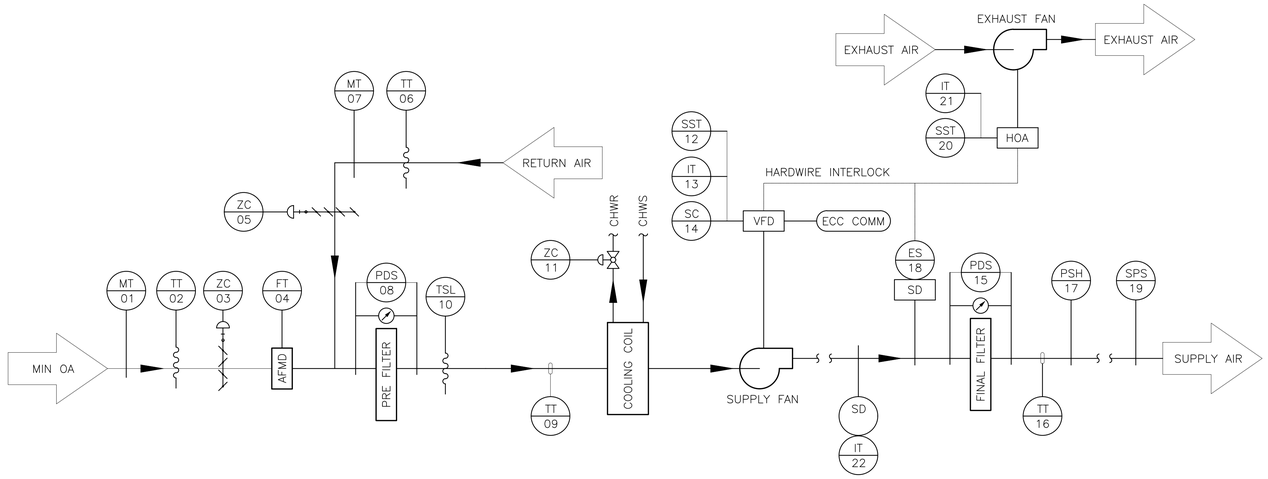

AHU SYSTEM I/O POINTS LIST		SYSTEM OUTPUTS								SYSTEM INPUTS								GENERAL INSTRUCTIONS							
		BINARY				ANALOG				BINARY				ANALOG				SOFTWARE RESPONSES							
SYSTEM COMPONENTS:	ID#	START / STOP	OPEN / CLOSE	ON / OFF	GENERAL BINARY OUTPUT	SPEED CONTROL	POSITION CONTROL	GENERAL ANALOG OUTPUT	GENERAL ANALOG OUTPUT	SWITCH	STATUS	ALARM	GENERAL BINARY INPUT	SENSOR	POSITION FEEDBACK	PERCENT LOADING	GENERAL ANALOG INPUT	UPPER LIMIT RESPONSE	LOWER LIMIT RESPONSE	SCHEDULED OPERATION	OPERATOR ACKNOWLEDGEMENT	COLLECT TRENDING DATA	CALL TO FIRE ALARM SYSTEM	EMERGENCY POWER ACTIVATION	DEVICE COMMUNICATION	NOTES:
OUTDOOR AIR RELATIVE HUMIDITY	01													●								●				–
OUTDOOR AIR TEMPERATURE	02													●								●				–
OUTDOOR AIR DAMPER	03						●															●				–
OUTDOOR AIR FLOW	04													●								●				–
RETURN AIR DAMPER	05						●															●				–
RETURN AIR TEMPERATURE	06													●								●				–
RETURN AIR RELATIVE HUMIDITY	07											●		●					●	●		●				HIGH=60% RH
PRE FILTERS DIFFERENTIAL PRESSURE	08															●						●				HIGH=1.0 IN WC, LOW=0.25 IN WC
MIXED AIR TEMPERATURE	09											●		●						●		●				MIN SETPOINT=45 DEG F
MIXED AIR TEMPERATURE LOW LIMIT SWITCH	10									●												●				SETPOINT=38 DEG F
COOLING COIL CONTROL VALVE	11						●															●				–
SUPPLY FAN VFD (START/STOP)	12	●																				●				–
SUPPLY FAN VFD (STATUS)	13										●										●	●				–
SUPPLY FAN VFD (SPEED CONTROL)	14					●																●				–
FINAL FILTERS DIFFERENTIAL PRESSURE	15															●					●	●				HIGH=1.5 IN WC, LOW=0.25 IN WC
FAN DISCHARGE AIR TEMPERATURE	16													●								●				INITIAL=55, UPPER=60, LOWER=52 DEG F
SUPPLY AIR STATIC PRESSURE	17											●							●		●	●				SETPOINT=3.0 IN WC
SMOKE DAMPER END SWITCH	18									●												●				–
SUPPLY DUCT STATIC PRESSURE	19													●								●				INITIAL=1.50, UPPER=2.0, LOWER=1.0 IN WC
EXHAUST FAN (START/STOP)	20	●																				●				–
EXHAUST FAN (STATUS)	21										●										●	●				–
SMOKE DETECTOR STATUS	22										●										●	●				–
–																										
–																										

1 MIN OA VARIABLE AIR VOLUME AIR HANDLING UNIT CONTROLS

NTS

FINAL DESIGN
APPROVED FOR CONSTRUCTION

Revisions: Date

CONSULTANTS:

Mark G. Hertz
Digitally signed by Mark G. Hertz
Date: 2018.03.12 17:03:08 -04'00'

ENGINEER–OF–RECORD MARK G. HERTZ FL. P.E. NO. 53279

MARK G. HERTZ LICENSE No. 53279 STATE OF FLORIDA PROFESSIONAL ENGINEER

ARCHITECT/ENGINEERS:

AKEA INC.
3603 NW 98th Street, Suite B
Gainesville, FL 32606
Phone: (352) 474–6124
Fax: (352) 553–4437
COA: FL #26693
AKEA Project No. 094–14

Drawing Title: MECHANICAL SYSTEMS CONTROLS

Approved: Project Director

Project Title: RENOVATE WARD 3C FOR CARDIOLOGY EQUIPMENT INSTALLATION

Location: GAINESVILLE, FLORIDA

Date: MARCH 9, 2018 | Checked: MGH | Drawn: MGH

Project Number: 573-CSI-102

Building Number: 1

Drawing Number: MI900

25 OF 62

Office of Construction and Facilities Management

Department of Veterans Affairs

VA FORM 08–6231