AHU SYSTEM I/O POINTS LIST		SYSTEM OUTPUTS									SYSTEM INPUTS									GENERAL INSTRUCTIONS								
		BINARY					ANALOG				BINARY				ANALOG					SOFTWARE RESPONSES								
SYSTEM COMPONENTS:	ID#	START / STOP	OPEN / CLOSE	ON / OFF	GENERAL BINARY OUTPUT		SPEED CONTROL	POSITION CONTROL	GENERAL ANALOG OUTPUT	GENERAL ANALOG OUTPUT	SWITCH	STATUS	ALARM	GENERAL BINARY INPUT	SENSOR	POSITION FEEDBACK	PERCENT LOADING	GENERAL ANALOG INPUT		UPPER LIMIT RESPONSE	LOWER LIMIT RESPONSE	SCHEDULED OPERATION	OPERATOR ACKNOWLEDGEMENT	COLLECT TRENDING DATA	CALL TO FIRE ALARM SYSTEM	EMERGENCY POWER ACTIVATION	DEVICE COMMUNICATION	NOTES:
ZONE TEMPERATURE SENSOR	01												●		●									●				HIGH/LOW ALARM = S.P. +/− 5 DEG F
ZONE MOISTURE SENSOR	02												●		●									●				HIGH ALARM = 60% RH
SUPPLY AIR TEMPERATURE SENSOR	03												●		●									●				HIGH/LOW ALARM = S.P. +/− 3 DEG F
ZONE HHW CONTROL VALVE	04							●																●				–
ZONE AIRFLOW CONTROL DAMPER	05							●																●				–
ZONE AIRFLOW SENSOR	06												●		●									●				HIGH/LOW ALARM = S.P. +/− 20%

ALL SETPOINTS SHALL BE ADJUSTABLE

1. General: The air terminal unit (ATU) shall be managed for automatic operations through its independent terminal level controller (TLC) which is integrated into the energy control center (ECC).

2. System Airflow Control: The ATU system modulates its control damper to maintain the supply air (SA) flow rate setpoint. For constant volume zones, the max flow rate = min flow rate regardless of its occupancy or thermal loading conditions.

2.1. Increased Loading: If the SA flow rate has decreased to below its setpoint, the integral control damper shall increase its position accordingly to increase the SA flow rate to maintain the SA flow rate setpoint.

2.2. Decreased Loading: If the SA flow rate has increased to above its setpoint, the integral control damper shall decrease its position accordingly to decrease the SA flow rate to maintain the SA flow rate setpoint.

3. Zone Temperature Control: The system's hydronic control valve modulates the heating hot water (HHW) flow through the reheat coil to maintain the zone temperature (ZT) setpoint.

3.1. Increased Loading: If the ZT has decreased to below its setpoint, the hydronic control valve shall increase its position accordingly to increase the temperature of the SA being provided to the zone to maintain the ZT setpoint.

3.2. Decreased Loading: If the ZT has increased to above its setpoint, the hydronic control valve shall decrease its position accordingly to decrease the temperature of the SA being provided to the zone to maintain the ZT setpoint.

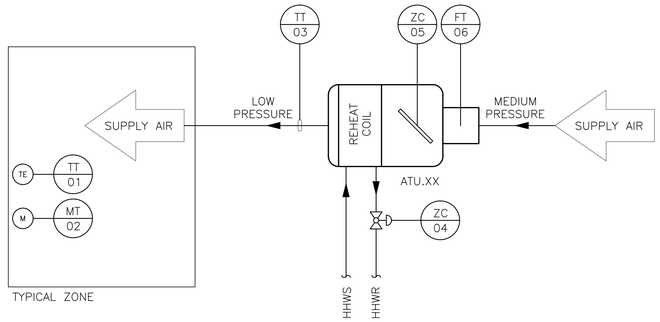

1 CONSTANT VOLUME AIR TERMINAL UNIT CONTROLS

NTS

AHU SYSTEM I/O POINTS LIST		SYSTEM OUTPUTS									SYSTEM INPUTS									GENERAL INSTRUCTIONS								
		BINARY					ANALOG				BINARY				ANALOG					SOFTWARE RESPONSES								
SYSTEM COMPONENTS:	ID#	START / STOP	OPEN / CLOSE	ON / OFF	GENERAL BINARY OUTPUT		SPEED CONTROL	POSITION CONTROL	GENERAL ANALOG OUTPUT	GENERAL ANALOG OUTPUT	SWITCH	STATUS	ALARM	GENERAL BINARY INPUT	SENSOR	POSITION FEEDBACK	PERCENT LOADING	GENERAL ANALOG INPUT		UPPER LIMIT RESPONSE	LOWER LIMIT RESPONSE	SCHEDULED OPERATION	OPERATOR ACKNOWLEDGEMENT	COLLECT TRENDING DATA	CALL TO FIRE ALARM SYSTEM	EMERGENCY POWER ACTIVATION	DEVICE COMMUNICATION	NOTES:
STEAM CONTROL VALVE 1	01							●																●				1/3 STEAM FLOW CONTROL VALVE
STEAM CONTROL VALVE 2	02							●																●				2/3 STEAM FLOW CONTROL VALVE
STEAM CONTROL VALVE 1	03							●																●				1/3 STEAM FLOW CONTROL VALVE
STEAM CONTROL VALVE 2	04							●																●				2/3 STEAM FLOW CONTROL VALVE
HHW SUPPLY TEMPERATURE SENSOR	05												●		●									●				HIGH/LOW ALARM = S.P. +/− 5 DEG F
HHW RETURN TEMPERATURE SENSOR	06												●		●									●				MONITORING PURPOSES ONLY
PUMP 1 CONTROLLER (START/STOP)	07	●																						●				–
PUMP 1 CONTROLLER (STATUS)	08												●											●				–
PUMP 2 CONTROLLER (START/STOP)	09	●																						●				–
PUMP 2 CONTROLLER (STATUS)	10												●											●				–
DIFFERENTIAL PRESSURE SENSOR	11												●		●									●				HIGH/LOW ALARM = S.P. +/− 20%
LOOP BYPASS CONTROL VALVE	12							●																●				–

ALL SETPOINTS SHALL BE ADJUSTABLE

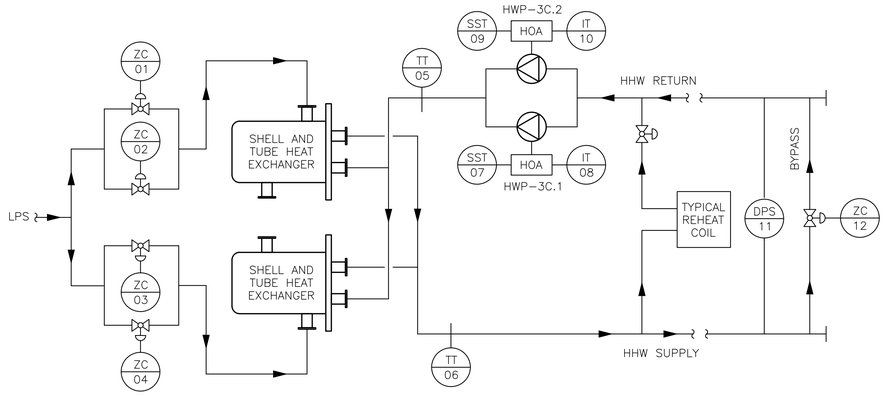

1. General: The heating hot water (HHW) system shall be managed for automatic operations through its independent terminal level controller (TLC) which is integrated into the energy control center (ECC).

2. Loop Pressure Control: The HHW system is always enabled and operating to maintain a constant HHW flow distribution throughout the loop.

2.1. Increased Loading: If the differential pressure (DP) sensor has decreased to below its setpoint, the bypass control valve shall decrease its position accordingly to increase the HHW loop DP to maintain the DP setpoint.

2.2. Decreased Loading: If the DP sensor has increased to above its setpoint, the bypass control valve shall increase its position accordingly to decrease the HHW loop DP to maintain the DP setpoint.

3. Loop Temperature Control: The system's steam control valves shall in sequence modulate steam into the heat exchanger to maintain the HHW supply temperature (HHWST) setpoint.

Each of the shell and tube heat exchangers include two control valves and a manual bypass valve to manage the steam flow for each HX independently. The 1/3 valve shall be sized for 1/3 of the total steam flow and the 2/3 valve shall be sized for 2/3 of the total steam flow.

3.1. Increased Loading: If the HHWST has decreased to below its setpoint, the 1/3 steam control valve increases its position accordingly to maintain the HHWST setpoint. If the HHWST setpoint cannot be achieved by the 1/3 valve alone, the 2/3 control valve shall increase its position accordingly to provide additional steam flow to maintain the HHWST setpoint.

3.2. Decreased Loading: If the HHWST has increased to above its setpoint, the two steam control valve positions shall decrease in sequence to maintain the HHWST setpoint. The 2/3 valve shall be fully closed before the 1/3 valve modulates.

4. Pump Failure Condition: If the command for a pump's operation is in conflict with its operational status for at least 5-minutes, the pump has failed. Deactivate the duty pump and activate the standby pump.

2 HEATING HOT WATER DISTRIBUTION SYSTEM CONTROLS

NTS

FINAL DESIGN
APPROVED FOR CONSTRUCTION

Revisions: Date

CONSULTANTS:

Mark G. Hertz
Digitally signed by Mark G. Hertz
Date: 2018.03.13 15:11:56 -04'00'

ENGINEER-OF-RECORD FL. P.E. NO.
MARK G. HERTZ 53279

MARK G. HERTZ LICENSE No. 53279 STATE OF FLORIDA PROFESSIONAL ENGINEER

ARCHITECT/ENGINEERS:

AKEA INC.
3603 NW 98th Street, Suite B
Gainesville, FL 32606
Phone: (352) 474-6124
Fax: (352) 553-4437
COA: FL #26693
AKEA Project No. 094-14

Drawing Title: MECHANICAL SYSTEMS CONTROLS

Approved: Project Director

Project Title: RENOVATE WARD 3C FOR CARDIOLOGY EQUIPMENT INSTALLATION

Location: GAINESVILLE, FLORIDA

Date: MARCH 9, 2018 | Checked: MGH | Drawn: MGH

Project Number: 573-CSI-102

Building Number: 1

Drawing Number: MI901

26 OF 62

Office of Construction and Facilities Management

Department of Veterans Affairs

VA FORM 08-6231