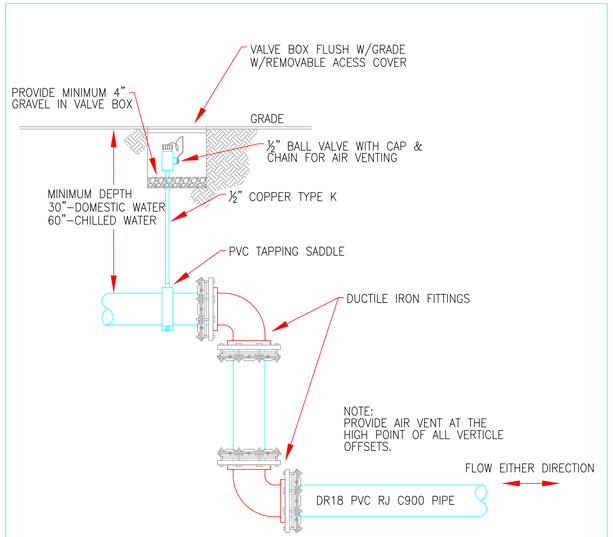

ELEVATION – PIPE OFFSET WITH HIGH POINT AIR VENT

NTS 4

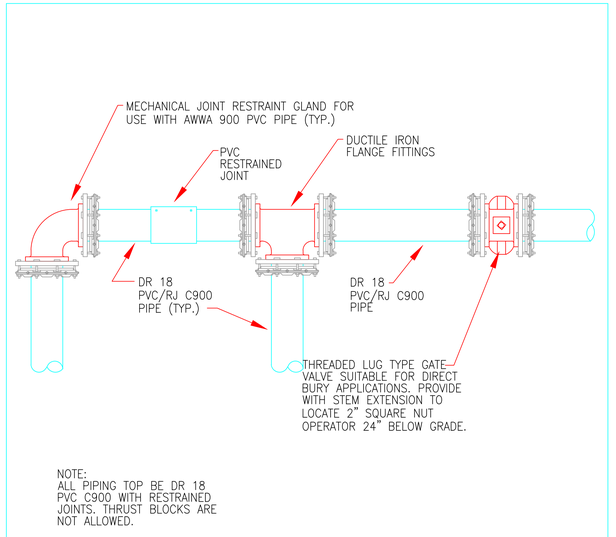

PLAN VIEW TYPICAL RESTRAINED JOINT(RJ) PVC PIPING INSTALLATION

NTS 2

1. THE PROJECT SCOPE CONSISTS OF REPLACEMENT OF AND NEW INSTALLATION OF UNDERGROUND DOMESTIC WATER PIPING.
2. THE EXISTING PIPING IS ASSUMED TO BE CAST IRON. THE REPLACEMENT PIPING SHALL BE RESTRAINED JOINT AWWA C900 PVC/DR18.
3. DOMESTIC WATER PIPING SHALL CONSIST OF BUT NOT BE LIMITED TO PIPING, FITTINGS, VALVES, FIRE HYDRANTS AND INDICATOR POSTS.
4. ALL WORK SHALL BE PHASED TO PROVIDE MINIMUM DOWN TIME FOR EACH SYSTEM AND OR BUILDING. THE CONTRACTOR SHALL PROVIDE A CONSTRUCTION SEQUENCE AND SCHEDULE INDICATING ANTICIPATED SYSTEM DOWN TIME.
5. THE CONTRACTOR IS RESPONSIBLE FOR LOCATING ALL EXISTING UNDERGROUND UTILITIES. ANY AND ALL DAMAGE CREATED BY WORK UNDER THIS PROJECT WILL BE THE RESPONSIBILITY OF THIS CONTRACTOR FOR REPAIR OR REPLACEMENT.
6. THE CONTRACTOR WILL UTILIZE BEST PRACTICE FOR UNDERGROUND PIPE INSTALLATION AND REPLACEMENT AS THE SITUATION DICTATES.
7. BED ALL PIPE IN SAND

GENERAL PROJECT NOTES

NTS 5

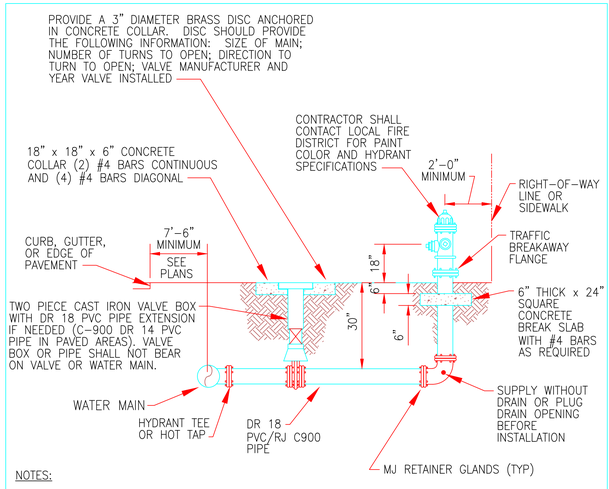

NOTES:

1. HYDRANT MUST BE CURRENT YEAR MANUFACTURE AND YEAR OF MANUFACTURE MUST BE CAST ON BARREL.
2. ALL FIRE HYDRANT BARRELS SHALL BE A MINIMUM 5–1/4" IN DIAMETER.
3. ALL FIRE HYDRANTS INSTALLED SHALL BE OF THE BREAK AWAY FLANGE TYPE AND SHALL MEET THE REQUIREMENTS OF THE LOCAL FIRE CONTROL DISTRICT.
4. HYDRANT SHALL CONFORM WITH AWWA C–502.
5. THRUST RESTRAINT SHALL BE BY MJ RETAINER GLANDS.

FIRE HYDRANT DETAIL

NTS 3

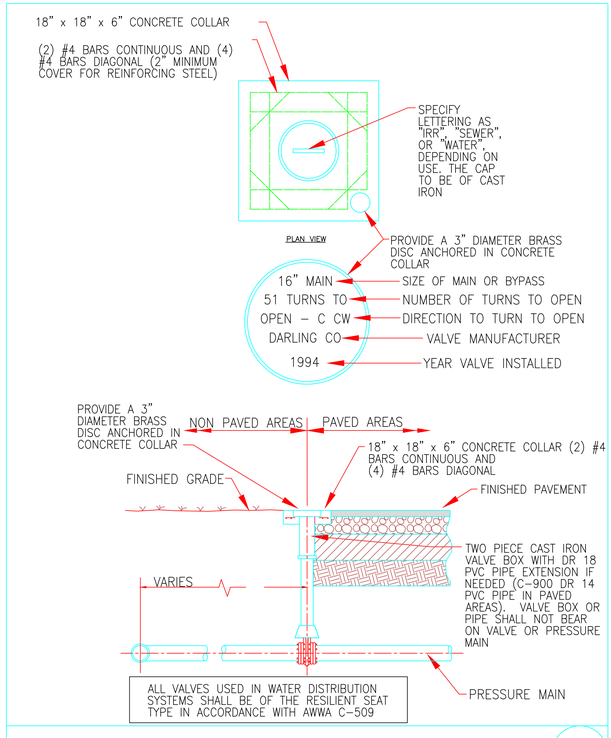

TYPICAL VALVE SETTING DETAIL

NTS 1

Revision	Date

RECOMMEND APPROVAL

REQUESTER	Date		
CHIEF OF SERVICE	Date	CHIEF OF STAFF	Date
ASSOC. DIR. PATIENT CARE SVC.	Date	ASSOC. DIR. for OPERATIONS	Date
APPROVAL BY: MEDICAL CENTER DIRECTOR			Date

Drawing Title: DOMESTIC WATER PIPING NOTES AND DETAILS

Approved: Safety Manager/M&O Supervisor

Approved: Chief of Facilities Management Svr.

Project Title: REPLACE DOMESTIC WATER PIPING–NORTH LOOP

Building Number: CMAPUS | Checked | Drawn: BLF

Location: W.G.(Bill) Hefner Medical Center, 1601 Brenner Ave., Salisbury NC 28144

Date: 29 JUNE 2012

Project No. 659-12-253

DRAWING NO. U-001

DWG. 4 OF 8

Department of Veterans Affairs