Project Title: Repair Boiler Header Expansion Joint (SA)

Project No. 630A4-11-432

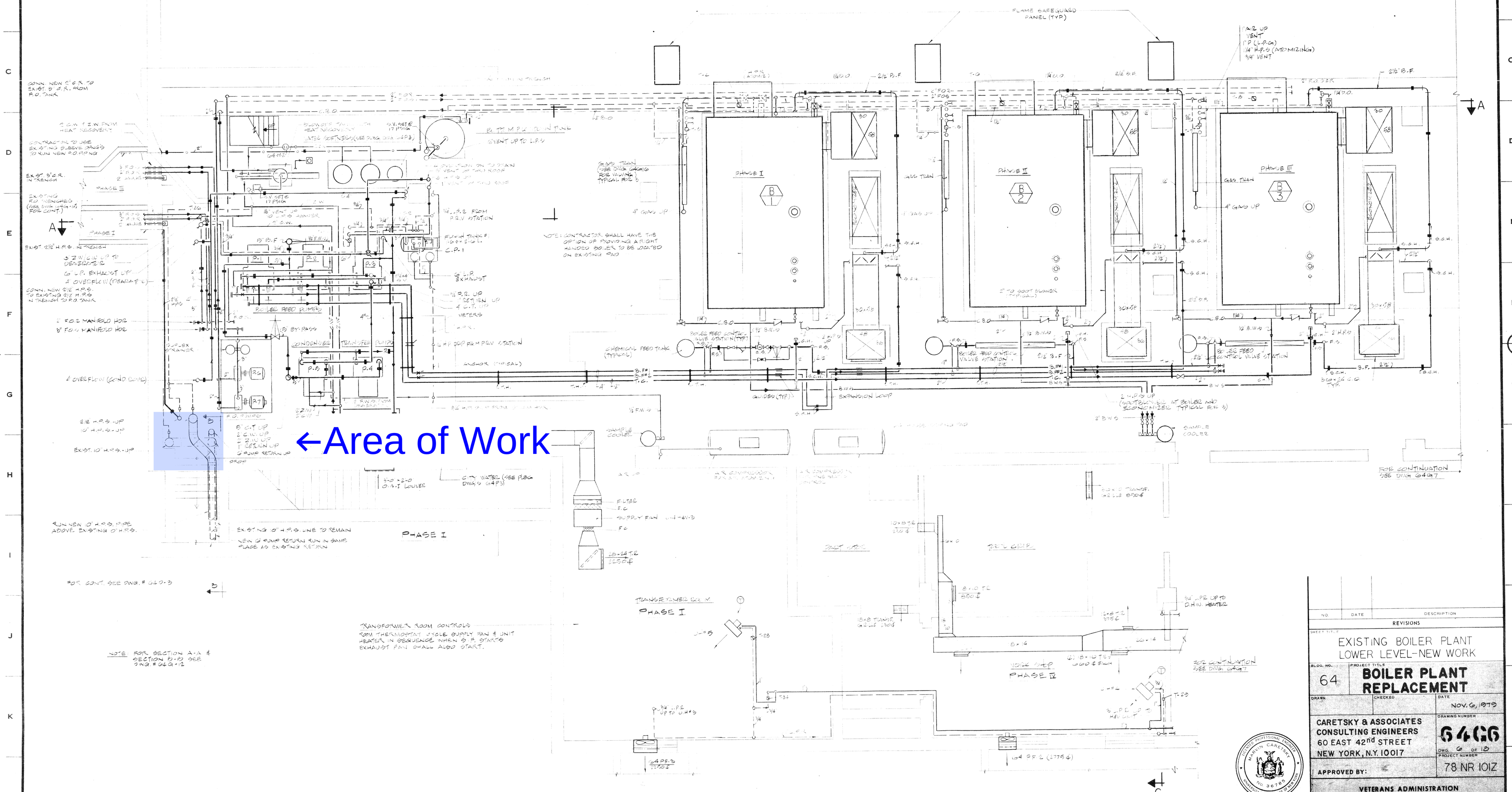

VA FORM 08-6231, FEB 1973

U. S. GOVERNMENT PRINTING OFFICE : 1973 O - 497-061

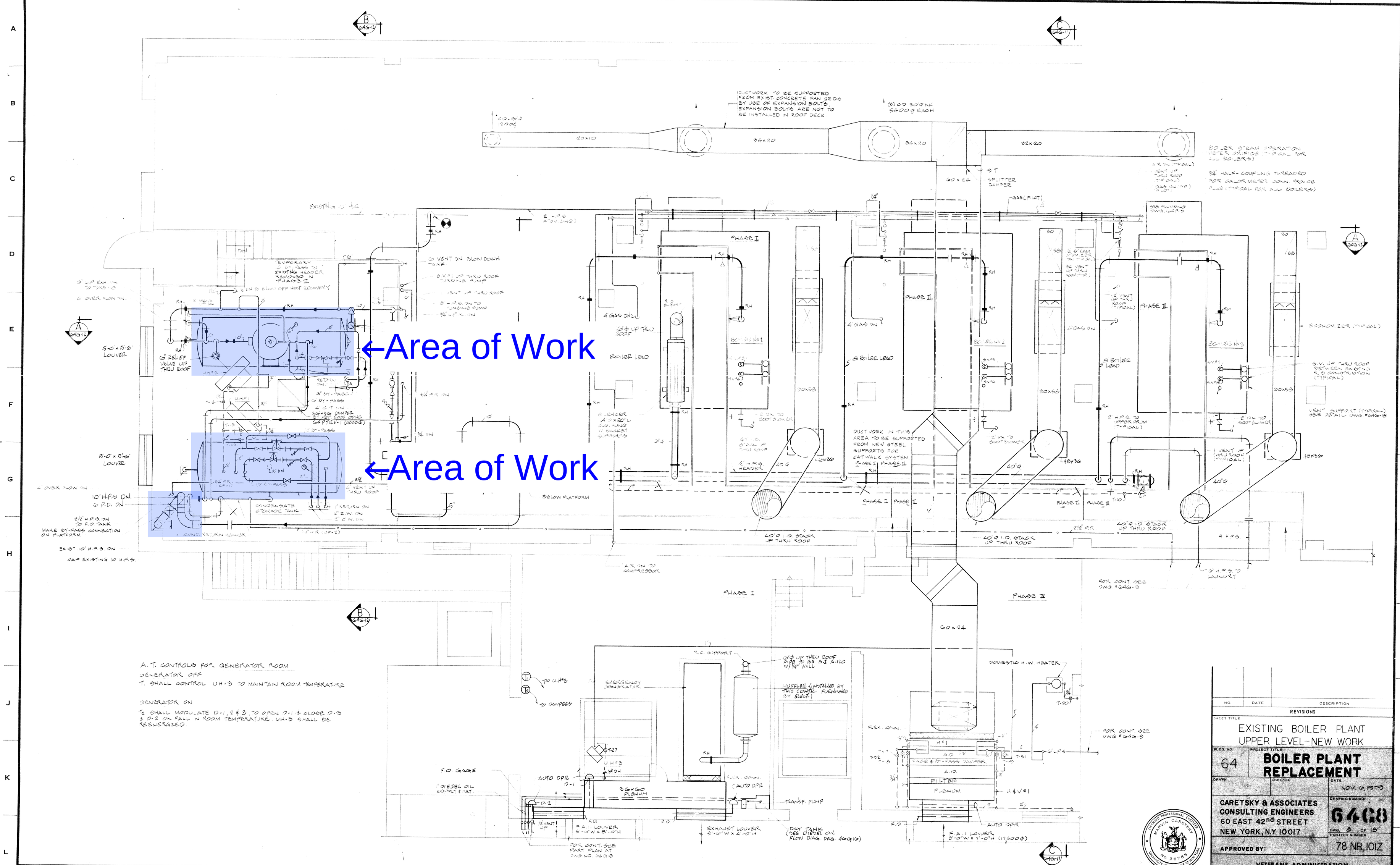

VA FORM 08-6231, FEB 1973

☆ U. S. GOVERNMENT PRINTING OFFICE : 1973 O - 497-169

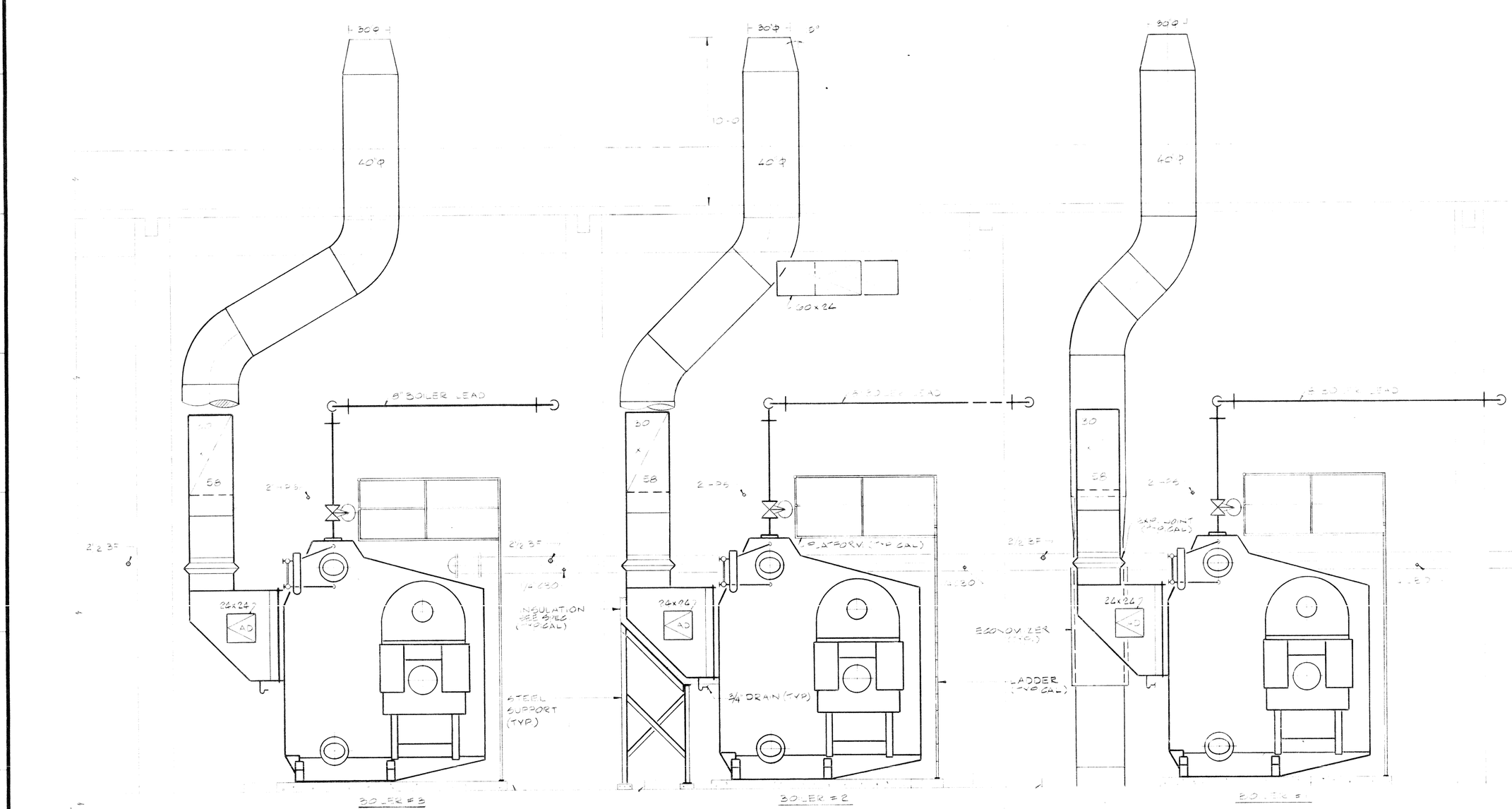

SECTION A-A

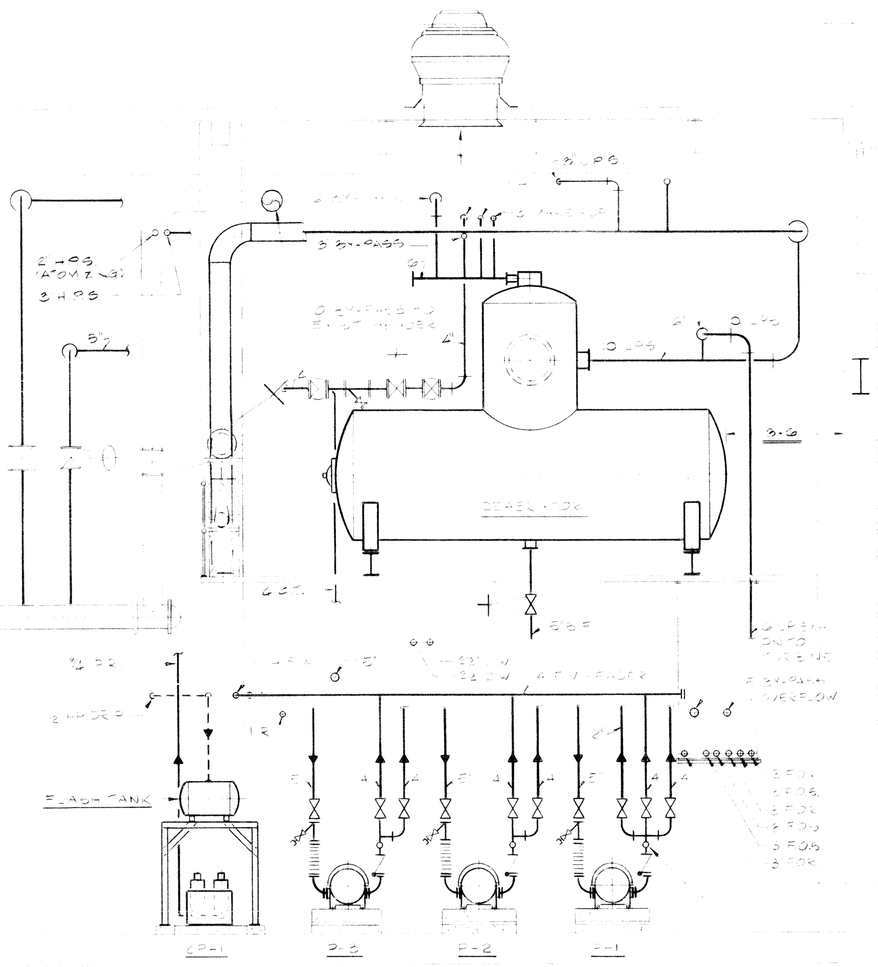

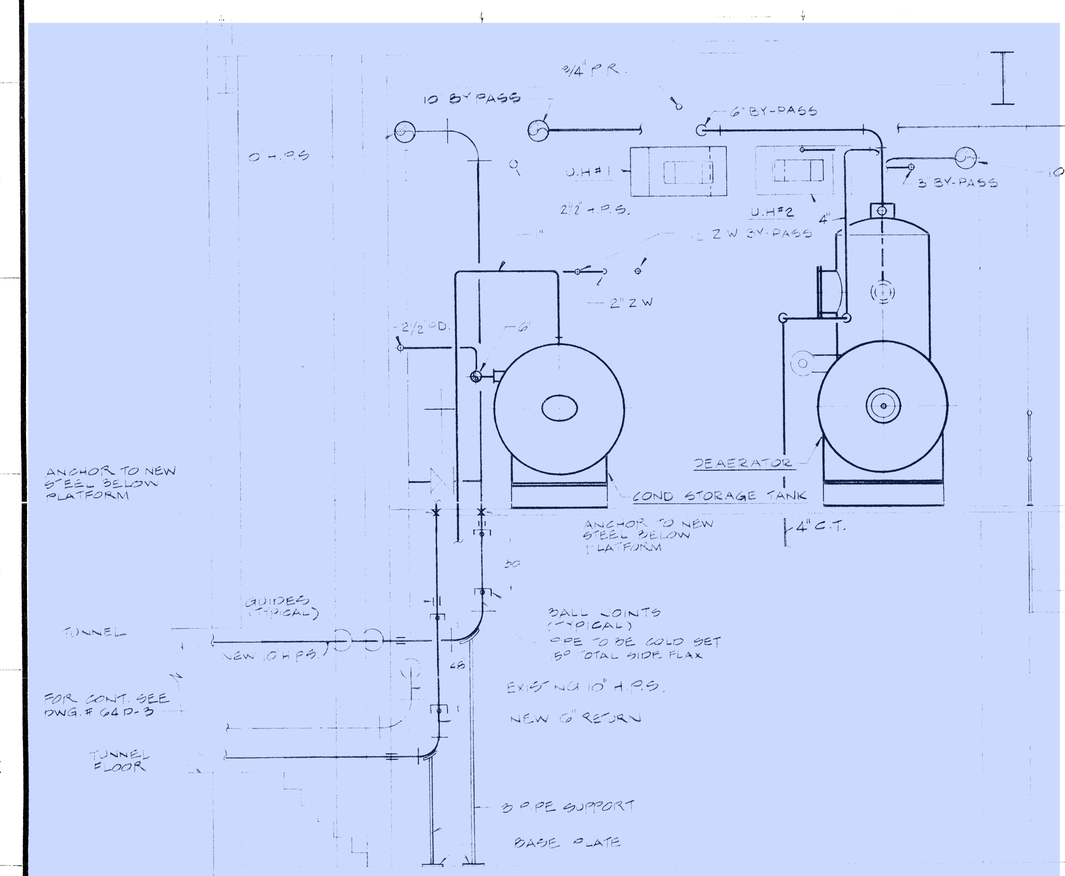

SECTION B-B

←Area of Work

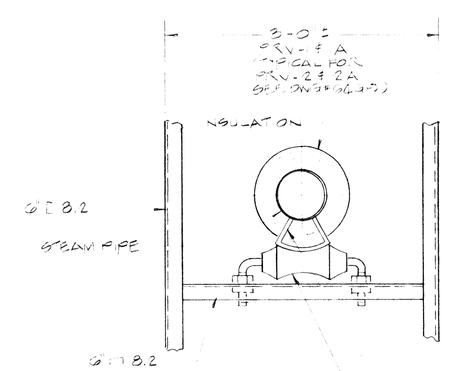

NO	DATE	DESCRIPTION

REVISIONS

SHEET TITLE: SECTIONS

BLDG. NO.: 64

PROJECT TITLE: **BOILER PLANT REPLACEMENT**

DRAWN | CHECKED | DATE: NOV. 6, 1979

CARETSKY & ASSOCIATES
CONSULTING ENGINEERS
60 EAST 42nd STREET
NEW YORK, N.Y. 10017

DRAWING NUMBER: 64G12

DWG. 12 OF 18

APPROVED BY:

PROJECT NUMBER: 78 NR 101Z

VETERANS ADMINISTRATION

LOCATION: V.A.E.C.C. ST. ALBANS, N.Y.

THREE INCHES EQUALS ONE FOOT | ONE AND ONE HALF INCHES EQUALS ONE FOOT | ONE INCH EQUALS ONE FOOT | THREE QUARTER INCH EQUALS ONE FOOT | ONE HALF INCH EQUALS ONE FOOT | THREE EIGHTH INCH EQUALS ONE FOOT | ONE QUARTER INCH EQUALS ONE FOOT | ONE EIGHTH INCH EQUALS ONE FOOT