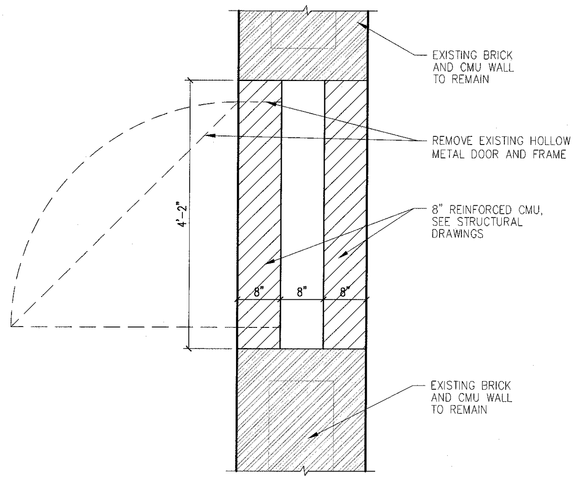

PLAN DETAIL 9
A1.0 | A8.0

GRAPHIC SCALE SUPERSEDES NUMERIC SCALE
0 8" 16" 32"
SCALE: 3/4" = 1'-0"

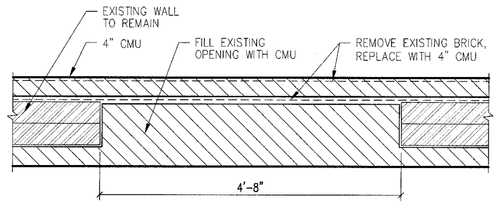

PLAN DETAIL 13
A1.0 | A8.0

GRAPHIC SCALE SUPERSEDES NUMERIC SCALE
0 8" 16" 32"
SCALE: 3/4" = 1'-0"

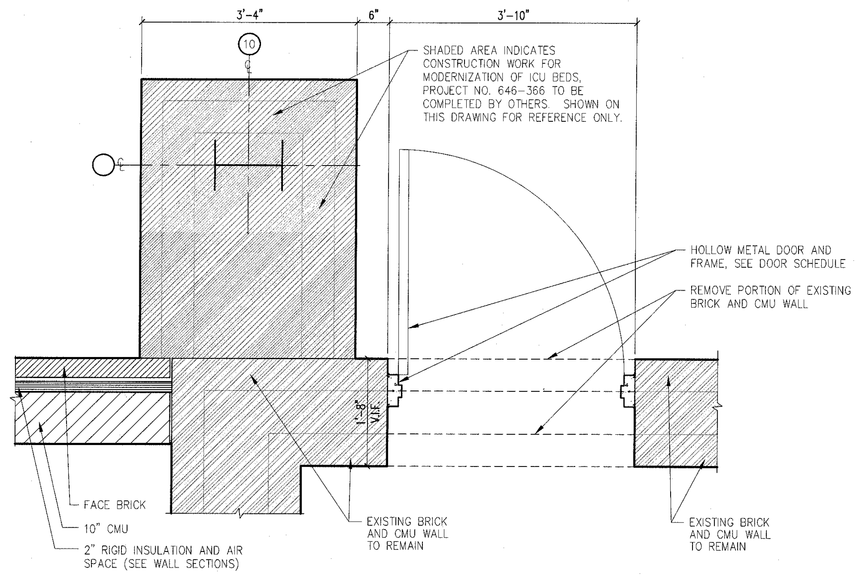

PLAN DETAIL 8
A1.0 | A8.0

GRAPHIC SCALE SUPERSEDES NUMERIC SCALE
0 8" 16" 32"
SCALE: 3/4" = 1'-0"

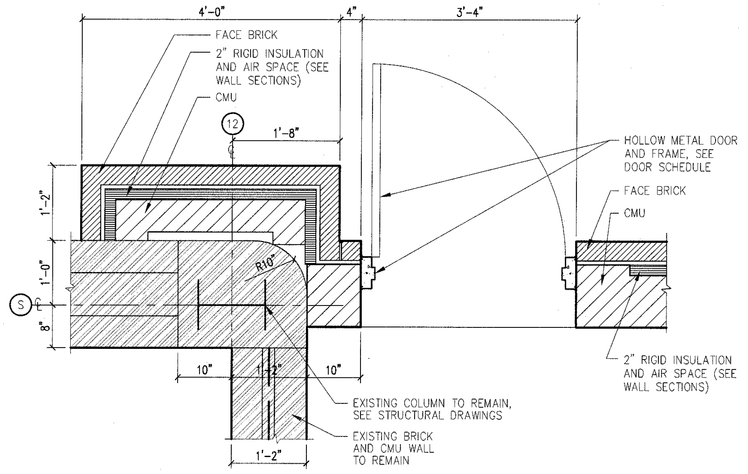

PLAN DETAIL 12
A1.0 | A8.0

GRAPHIC SCALE SUPERSEDES NUMERIC SCALE
0 8" 16" 32"
SCALE: 3/4" = 1'-0"

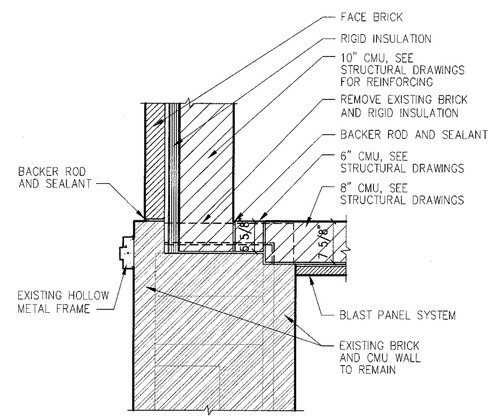

PLAN DETAIL 7
A2.0 | A8.0

GRAPHIC SCALE SUPERSEDES NUMERIC SCALE
0 8" 16" 32"
SCALE: 3/4" = 1'-0"

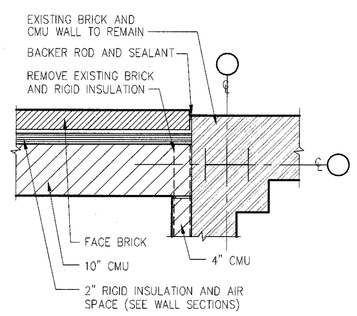

PLAN DETAIL 11
A1.0 | A8.0

GRAPHIC SCALE SUPERSEDES NUMERIC SCALE
0 8" 16" 32"
SCALE: 3/4" = 1'-0"

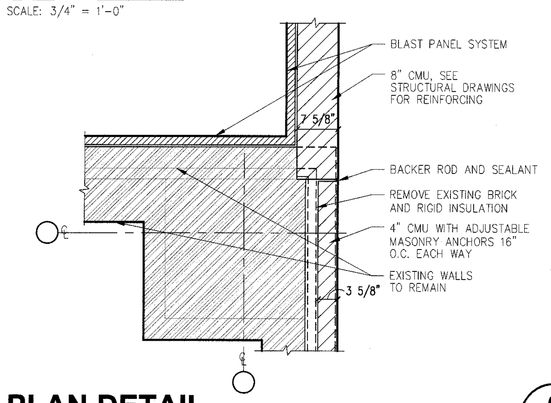

PLAN DETAIL 6
A1.0 | A8.0

GRAPHIC SCALE SUPERSEDES NUMERIC SCALE
0 8" 16" 32"
SCALE: 3/4" = 1'-0"

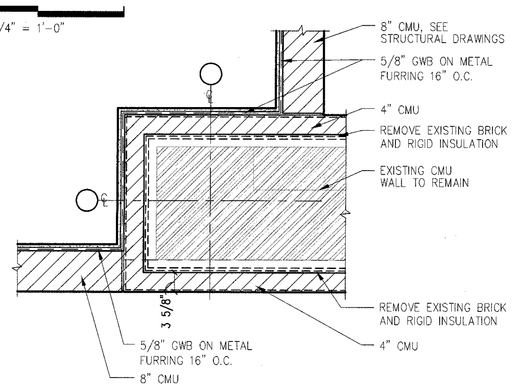

PLAN DETAIL 10
A2.0 | A8.0

GRAPHIC SCALE SUPERSEDES NUMERIC SCALE
0 8" 16" 32"
SCALE: 3/4" = 1'-0"

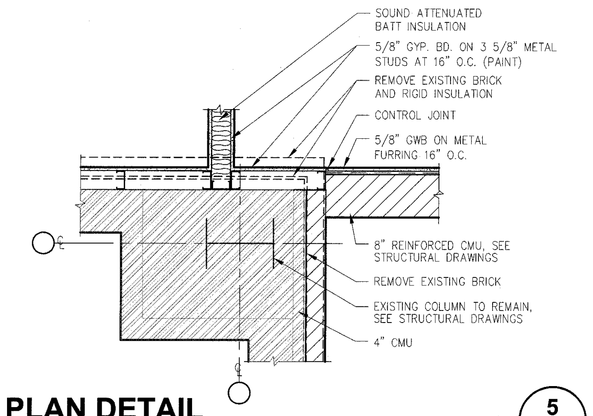

PLAN DETAIL 5
A2.0 | A8.0

GRAPHIC SCALE SUPERSEDES NUMERIC SCALE
0 8" 16" 32"
SCALE: 3/4" = 1'-0"

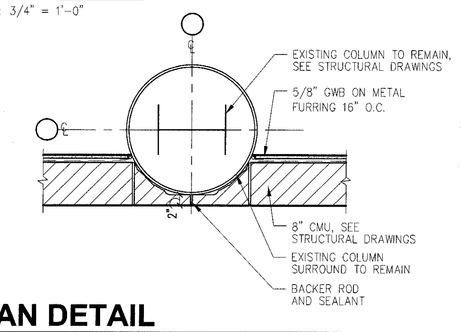

PLAN DETAIL 4
A2.0 | A8.0

GRAPHIC SCALE SUPERSEDES NUMERIC SCALE
0 8" 16" 32"
SCALE: 3/4" = 1'-0"

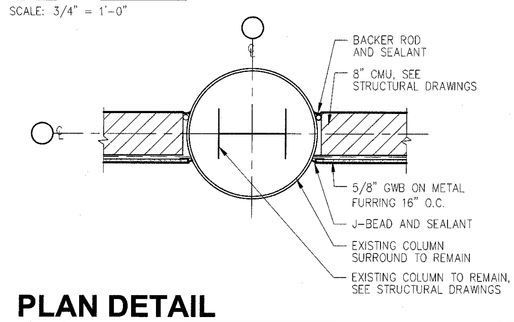

PLAN DETAIL 3
A2.0 | A8.0

GRAPHIC SCALE SUPERSEDES NUMERIC SCALE
0 8" 16" 32"
SCALE: 3/4" = 1'-0"

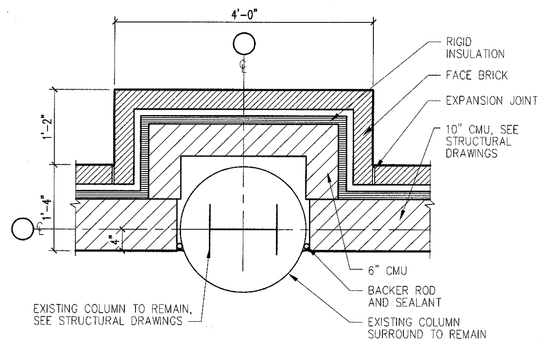

PLAN DETAIL 2
A2.0 | A8.0

GRAPHIC SCALE SUPERSEDES NUMERIC SCALE
0 8" 16" 32"
SCALE: 3/4" = 1'-0"

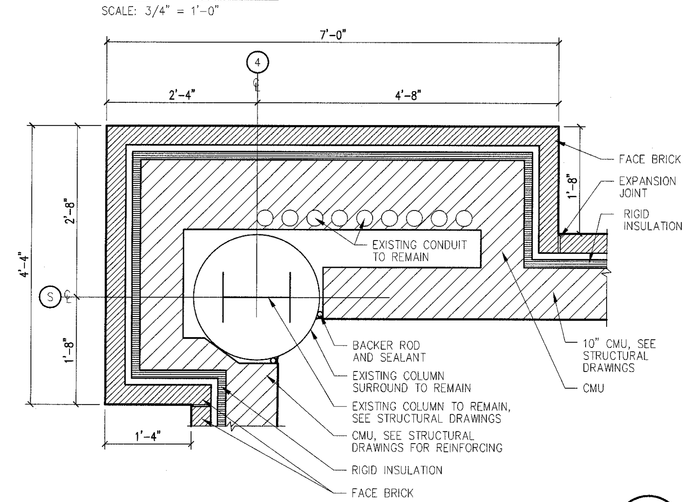

PLAN DETAIL 1
A2.0 | A8.0

GRAPHIC SCALE SUPERSEDES NUMERIC SCALE
0 8" 16" 32"
SCALE: 3/4" = 1'-0"

FULLY SPRINKLERED BUILDING

BID DOCUMENTS

REVISIONS	DATE
1	
2	
3	
4	
5	
6	
7	
8	
9	

PARADIGM
ENGINEERS AND CONSTRUCTORS
PO BOX 436225
Louisville, Kentucky 40253
502-339-8511 www.paradigmusa.com

UPGRADE SPD AND SECURITY DOCK
PROJECT: 646-367
VA PITTSBURGH HEALTHCARE SYSTEM
UNIVERSITY DRIVE C
PITTSBURGH, PENNSYLVANIA 15240

Department of Veterans Affairs

MADE BY: JG | CHECKED:
DATE: 7-28-11
PLAN DETAILS
DRAWING NO. A8.0 | BID PKG.