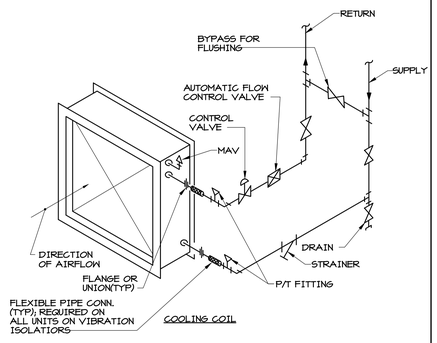

15 — 12 — COOLING COIL PIPING CONNECTION SCHEMATIC 9

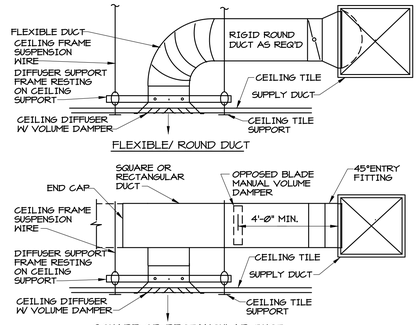

NOTE: SEE SPECIFICATIONS FOR INSULATION AND ACOUSTIC LINING REQUIREMENTS.

6 — CEILING DIFFUSER BRANCH DUCTS SCHEMATIC

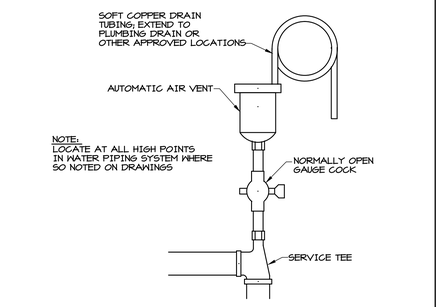

NOTE: LOCATE AT ALL HIGH POINTS IN WATER PIPING SYSTEM WHERE SO NOTED ON DRAWINGS

3 — AUTOMATIC AIR VENT SCHEMATIC

14 — 11 — HEATING COIL PIPING CONNECTION SCHEMATIC 8

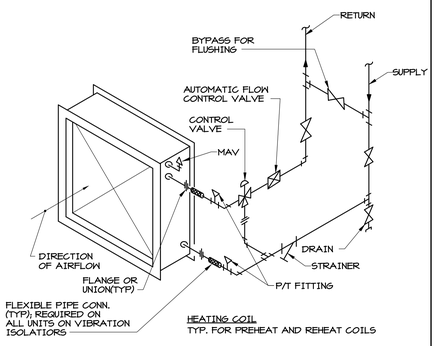

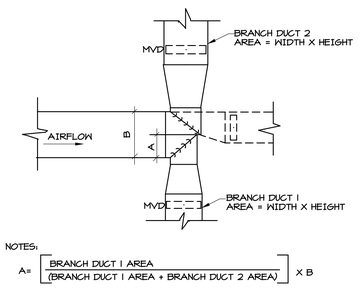

NOTES:

$$A = \frac{\text{BRANCH DUCT 1 AREA}}{(\text{BRANCH DUCT 1 AREA} + \text{BRANCH DUCT 2 AREA})} \times B$$

5 — SPLITTER DUCT DETAIL SCHEMATIC

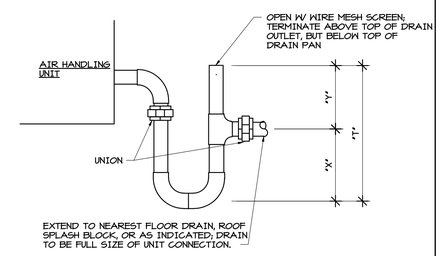

UNIT TYPE	X	Y	T
DRAW THRU (NEG SP)	1/2 OF Y	1" + CASING STATIC PRESSURE	X+Y+(1.5 x PIPE DIAMETER)
BLOW THRU (POS. SP)	1" + CASING STATIC PRESSURE	1" MINIMUM	X+Y+(1.5 x PIPE DIAMETER)

ELEVATION

2 — AIR HANDLING UNIT CONDENSATE DRAIN SCHEMATIC

13 — 10 — BRANCH DUCT TAKE-OFF OPTIONS SCHEMATIC 7

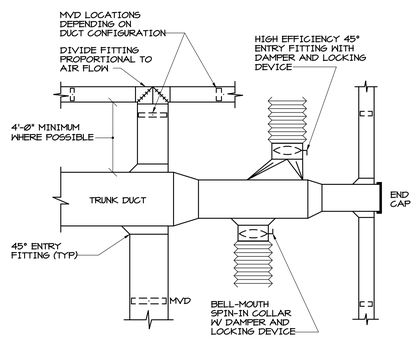

NOTE: THIS DETAIL IS GENERAL IN NATURE AND APPLIES WHERE CEILING ACCESS IS READILY AVAILABLE. DO NOT INSTALL BALANCING DAMPERS ABOVE "HARD CEILINGS" UNLESS BOTH DAMPERS AND ACCESS DOORS ARE INDICATED ON THE DRAWINGS. ASK IF THERE IS DOUBT AS TO THE DESIGNERS INTENT.

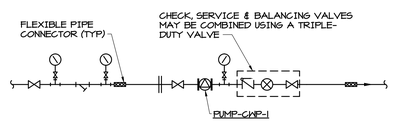

4 — INLINE PUMP CONNECTION SCHEMATIC

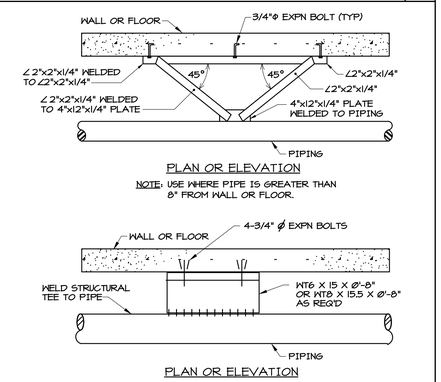

NOTE: USE WHERE PIPE IS GREATER THAN 8" FROM WALL OR FLOOR.

NOTE: USE WHERE PIPE IS 8" OR CLOSER TO WALL OR FLOOR.

1 — TYPICAL PIPE ANCHOR SCHEMATIC

Revisions: Date:

ARCHITECT/ENGINEERS:

SFCS Architecture Engineering Planning Interiors

SFCS Inc. ▪ 305 South Jefferson Street
Roanoke, Virginia 24011.2003
540.344.6664 ▪ Fax 540.343.6925
www.sfcs.com

COMMONWEALTH OF VIRGINIA — TYE A. CAMPBELL — LICENSE NO. 16037 — PROFESSIONAL ENGINEER

Approved: Energy Engineer
Approved: Infection Control
Approved: Service Chief
Approved: Safety Manager
Approved: Chief of Staff
Approved: GEMS Coordinator
Approved: Associate Director
Approved: Chief of Facility Management Services
Approved: Medical Center Director

Drawing Title: DETAILS - HVAC

Project Title: Patient Dining Area CLC
VA Medical Center
SFCS Commission Number: 6527.00

Location: Salem, Virginia

Date: 03/15/12 | Checked: - | Drawn: DES

Project Number: 658-307
Building Number(s): 2/2A
Drawing Number: M3.1
Dwg. 54 of 65

Office of Construction and Facilities Management
Department of Veterans Affairs

VA FORM 08-6231 (Modified)

9/20/11 10:35 A.M.