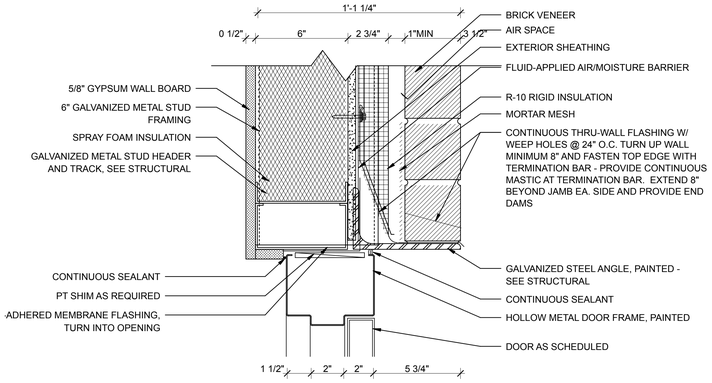

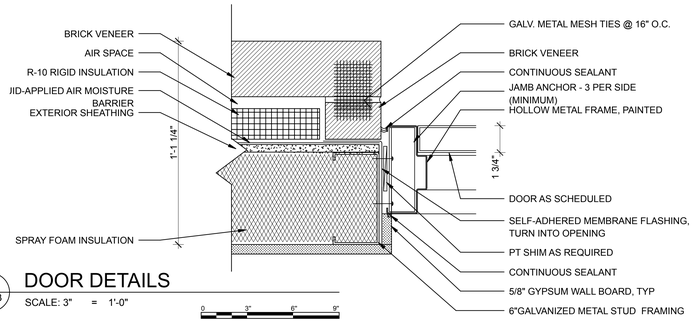

3 A603 DOOR DETAILS

SCALE: 3" = 1'-0"

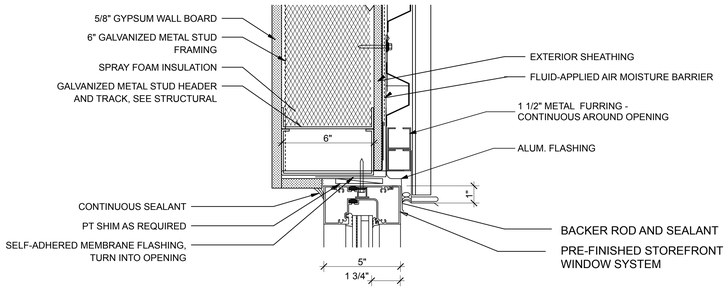

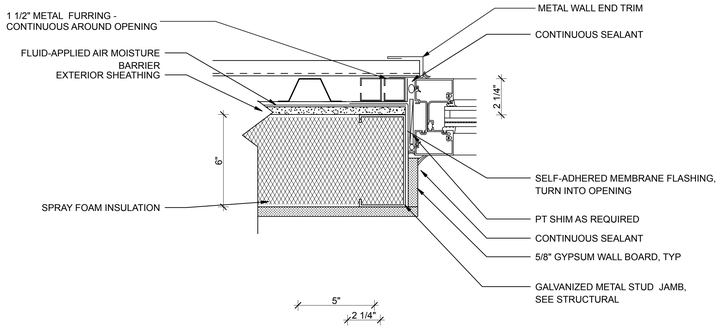

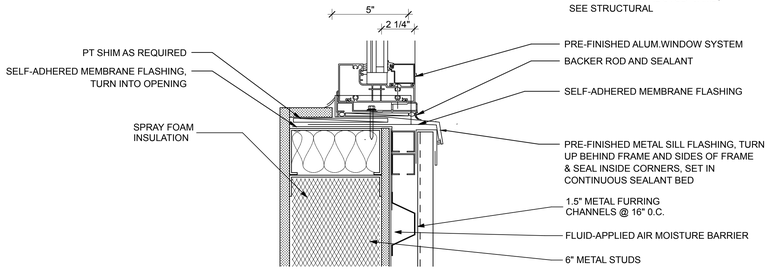

5 A603 CLERESTORY DETAILS

SCALE: 3" = 1'-0"

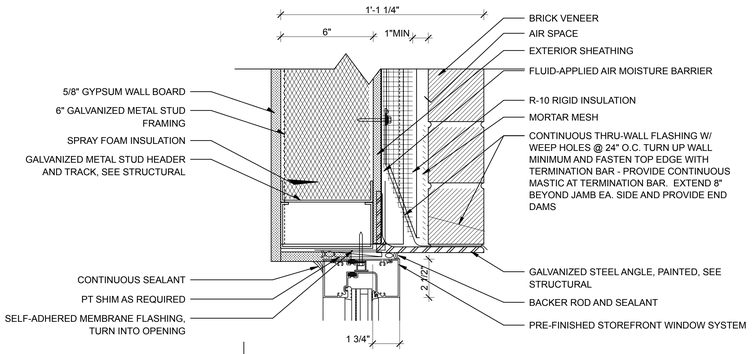

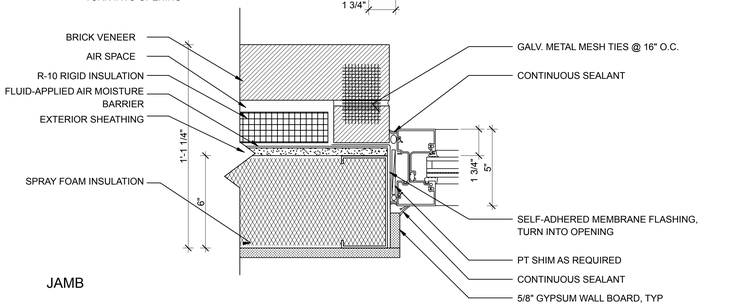

JAMB

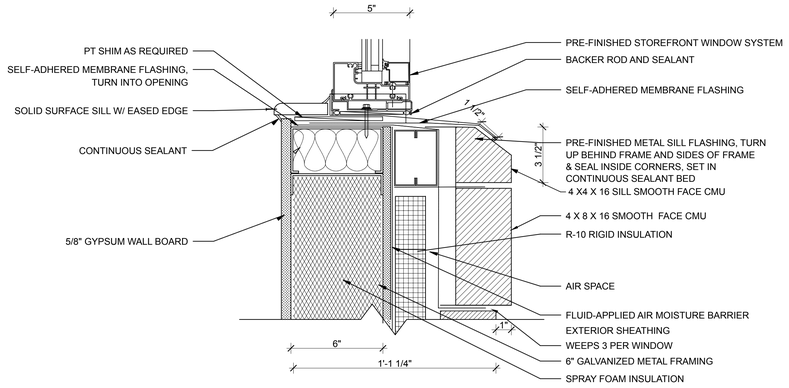

2 A603 WINDOW DETAILS

SCALE: 3" = 1'-0"

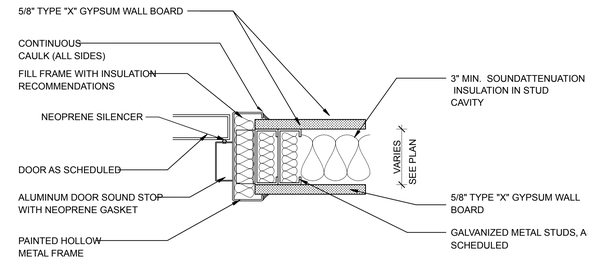

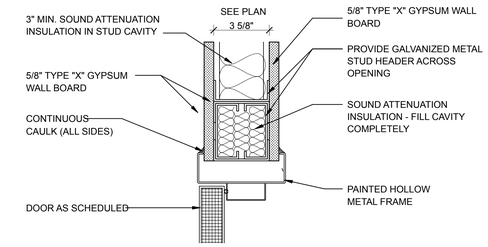

1 A603 FRAME DETAIL

SCALE: 3" = 1'-0"

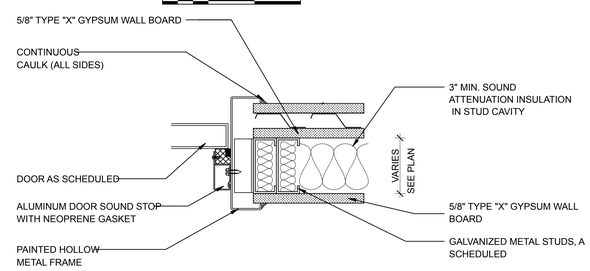

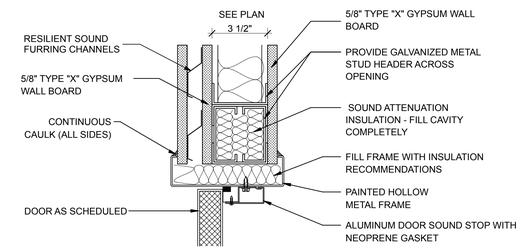

4 A603 FRAME DETAIL

SCALE: 3" = 1'-0"

FINAL SUBMISSION
APRIL 6, 2012

IF SHEET IS LESS THAN (30"x42") IT IS A REDUCED PRINT; SCALE ACCORDINGLY

A603

BES DESIGN/BUILD
766 MIDDLE ST., FAIRHOPE, AL 36532 251-990-5778

ARCH. & ENGR. SEAL

FLORIDA BES DESIGN/BUILD LLC No. 26795 CERTIFICATE OF AUTHORIZATION

STATE OF FLORIDA ALLEN COPPEDGE REGISTERED ARCHITECT AR99025 4/6/12

NATURAL RESOURCES & ENVIRONMENTAL AFFAIRS — SATISFACTORY TO DATE
SAFETY DEPARTMENT — SATISFACTORY TO DATE
FIRE DEPARTMENT — SATISFACTORY TO DATE
PUBLIC WORKS SUPERVISOR — SATISFACTORY TO DATE

P.W. DWG. NO.
DRAWN BY RWC
CHECKED BY BC
SUPERVISOR WWB
APPROVED DATE
PUBLIC WORKS OFFICER

DEPARTMENT OF THE NAVY NAVAL FACILITIES ENGINEERING COMMAND
NAVAL SUPPORT ACTIVITY
PANAMA CITY, FLORIDA

PANAMA CITY JOINT OUTPATIENT CLINIC
NAVAL GULF COAST HEALTH CARE
DOOR WINDOW DETAILS

SIZE F | CODE IDENT. NO. | N A V F A C DRAWING NO. N/A
HQMC PROJ. NO. | CONSTR. CONTR. NO.
SCALE AS NOTED | MACC. | T.O.# ____ | SHEET 23 OF 32