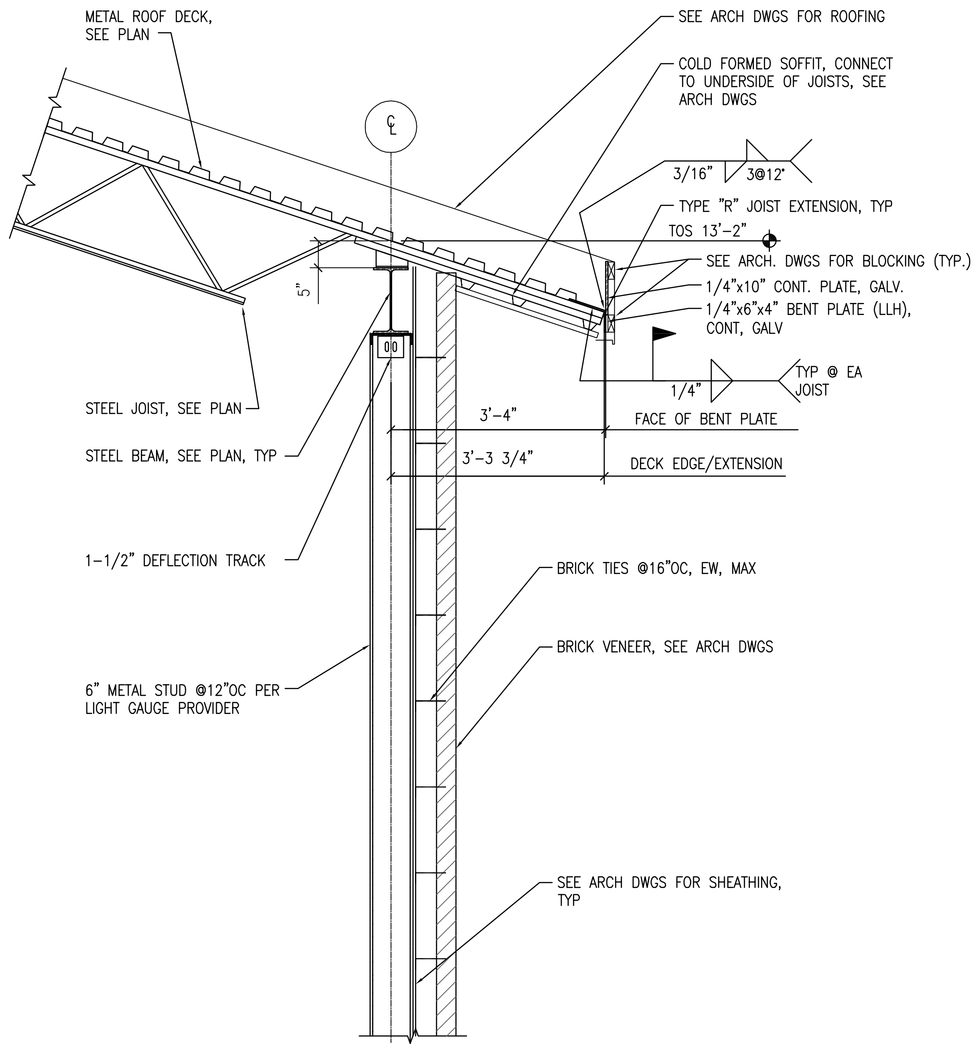

1 S103 **ROOF SECTION AT EXTERIOR WALL**
SCALE: 3/4"=1'-0"

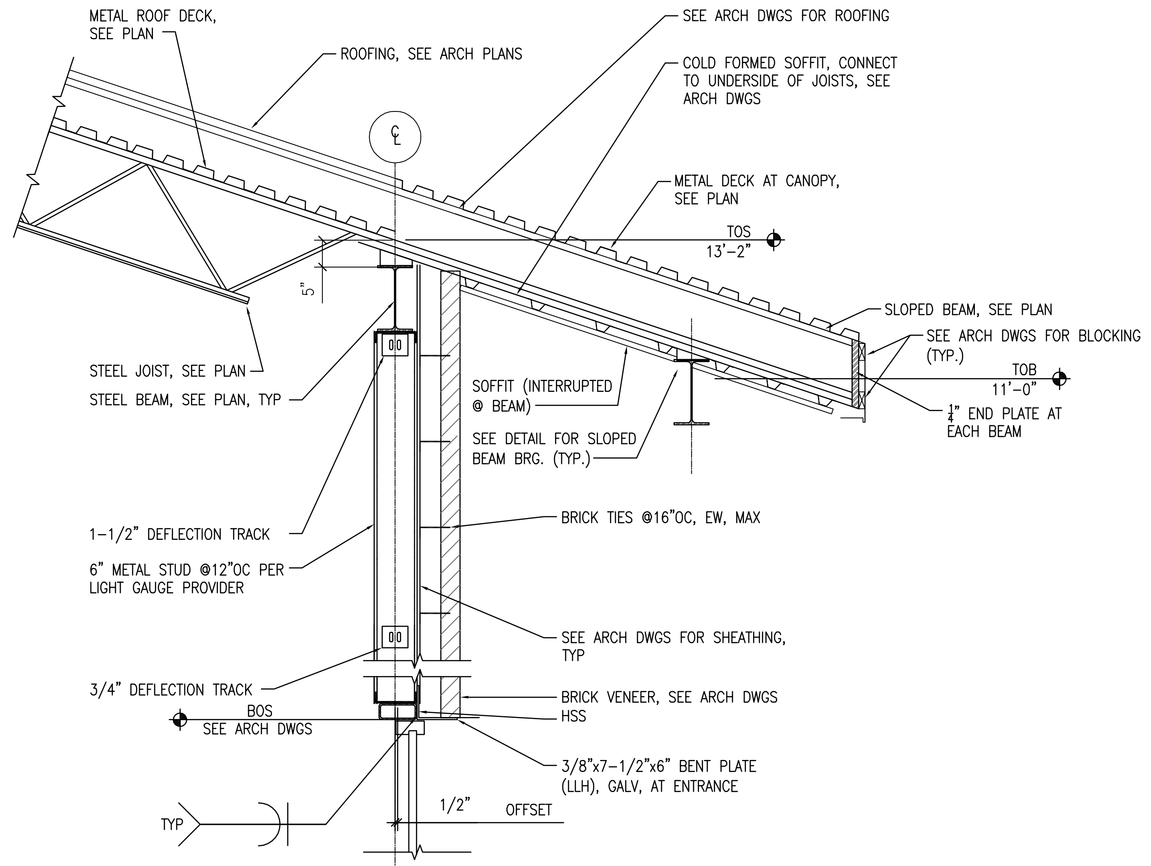

2 S103 **ROOF SECTION AT EXTERIOR WALL**
SCALE: 3/4"=1'-0"

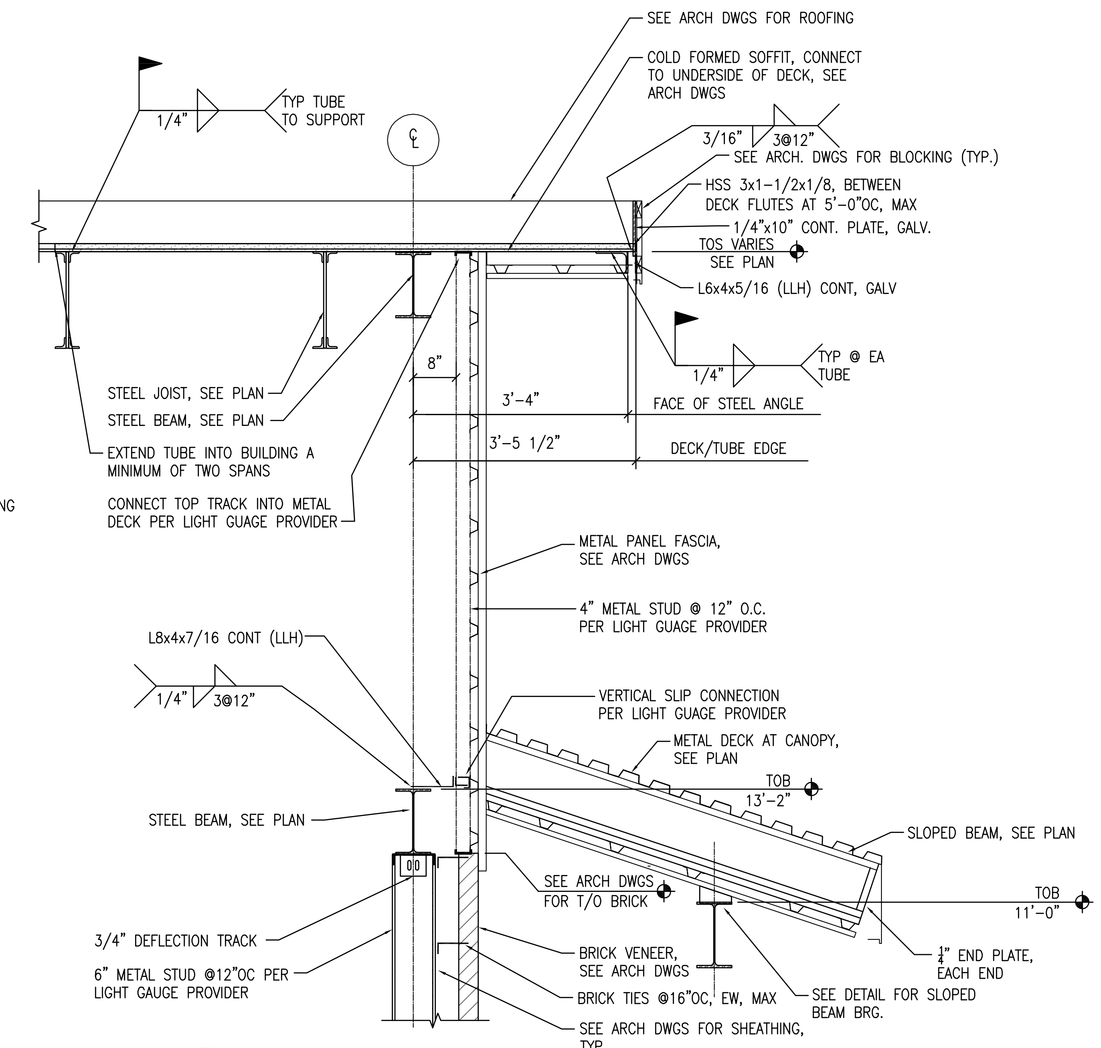

3 S103 **ROOF SECTION AT EXTERIOR WALL**
SCALE: 3/4"=1'-0"

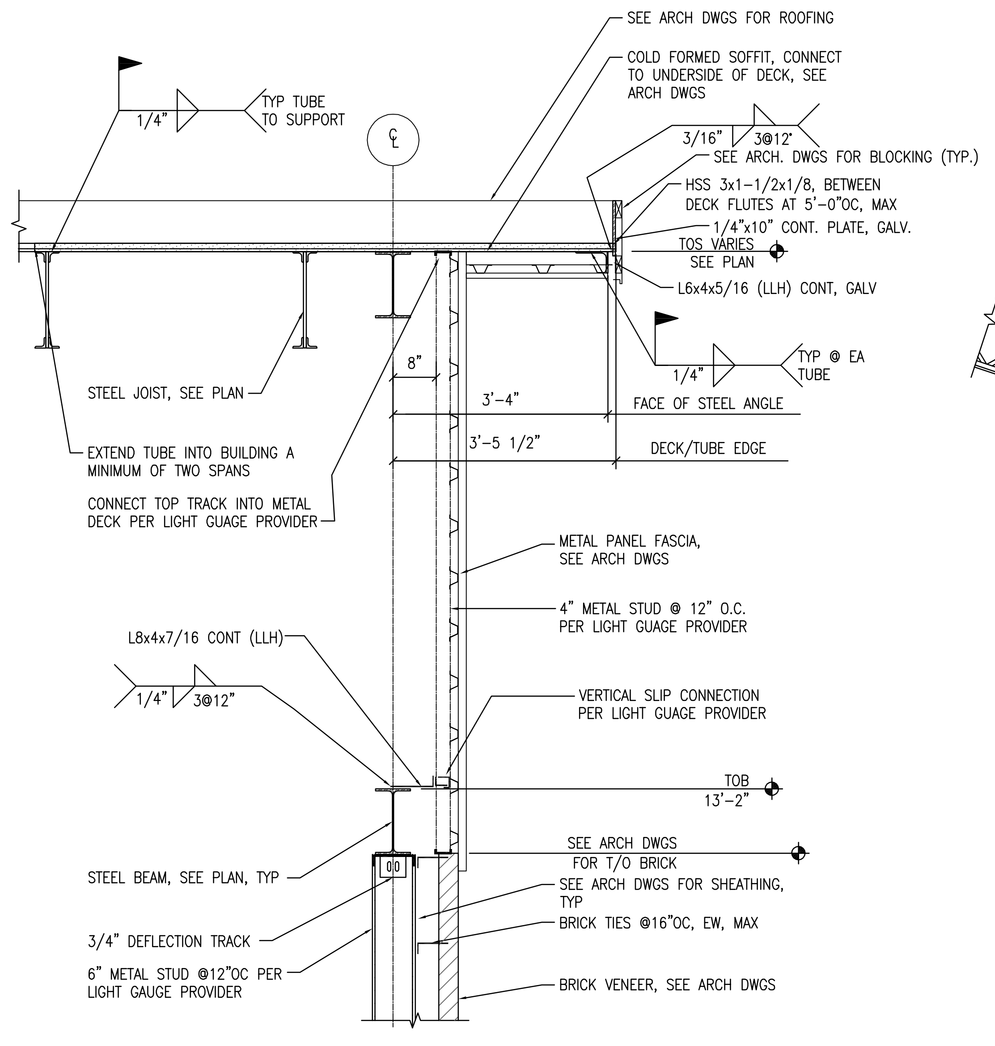

4 S103 **ROOF SECTION AT EXTERIOR WALL**
SCALE: 3/4"=1'-0"

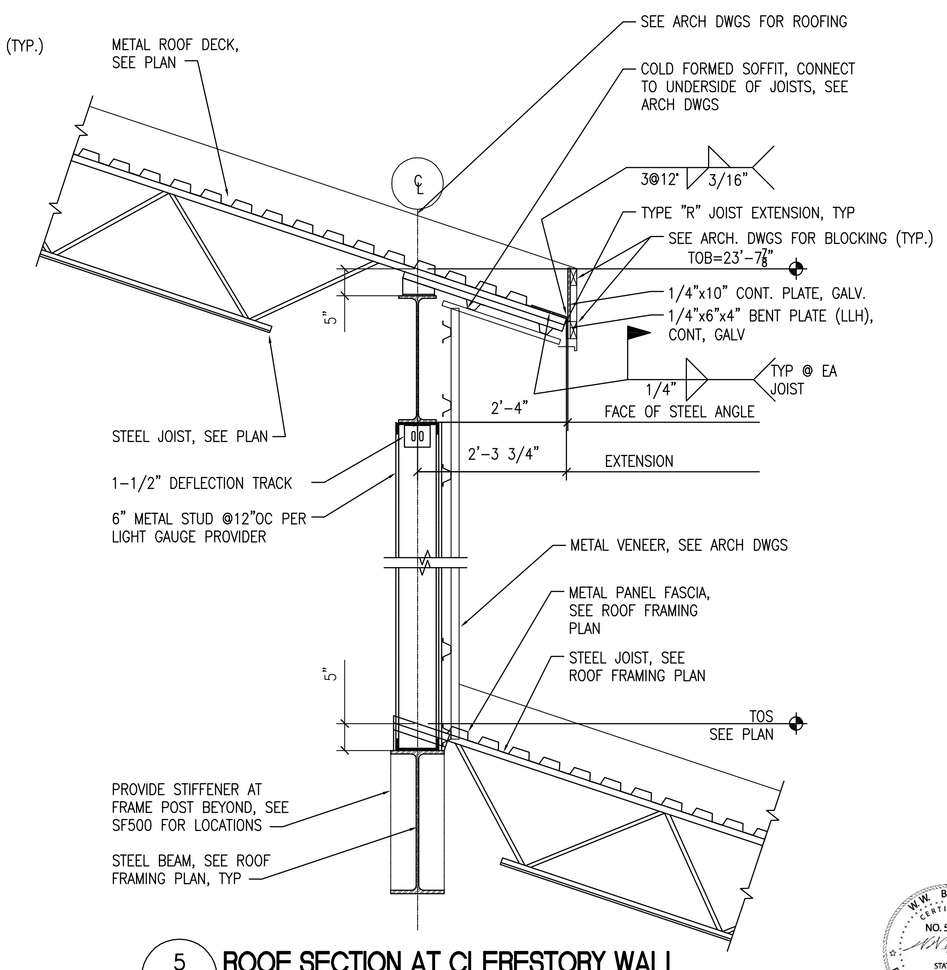

5 S103 **ROOF SECTION AT CLERESTORY WALL**
SCALE: 3/4"=1'-0"

W.W. BOLTON LICENSE NO. 56537 STATE OF FLORIDA PROFESSIONAL ENGINEER

FINAL SUBMISSION
APRIL 6, 2012

IF SHEET IS LESS THAN (30"x42") IT IS A REDUCED PRINT; SCALE ACCORDINGLY

S301

BES DESIGN/BUILD
766 MIDDLE ST., FAIRHOPE, AL 36532 251-990-5778
ARCH. & ENGR. SEAL
FLORIDA BES DESIGN/BUILD LLC No. 29795 CERTIFICATE OF AUTHORIZATION

NATURAL RESOURCES & ENVIRONMENTAL AFFAIRS	SATISFACTORY TO DATE
SAFETY DEPARTMENT	SATISFACTORY TO DATE
FIRE DEPARTMENT	SATISFACTORY TO DATE
PUBLIC WORKS SUPERVISOR	SATISFACTORY TO DATE

P.W. DWG. NO.
DRAWN BY: KM
CHECKED BY: NB
SUPERVISOR: WWB
APPROVED DATE
PUBLIC WORKS OFFICER

DEPARTMENT OF THE NAVY — NAVAL FACILITIES ENGINEERING COMMAND
NAVAL SUPPORT ACTIVITY
PANAMA CITY, FLORIDA

PANAMA CITY JOINT OUTPATIENT CLINIC
NAVAL GULF COAST HEALTH CARE
TYPICAL DETAILS

SIZE F | CODE IDENT. NO. | N A V F A C DRAWING NO. N/A
HOMC PROJ. NO. | CONSTR. CONTR. NO.
SCALE 1/4"=1'-0" | MACC. | T.O.# ____ | SHEET 6 OF 10