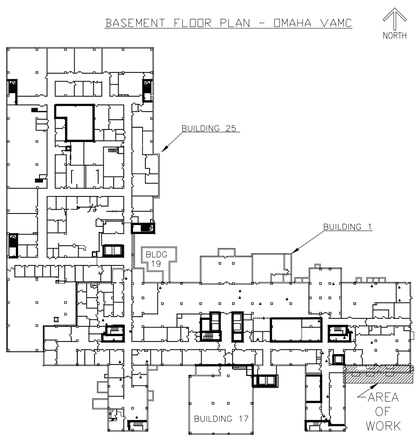

1.0 / G3 INSTALL GUARDRAIL – WORK LOCATION
SCALE: $\frac{1}{64}$" = 1'

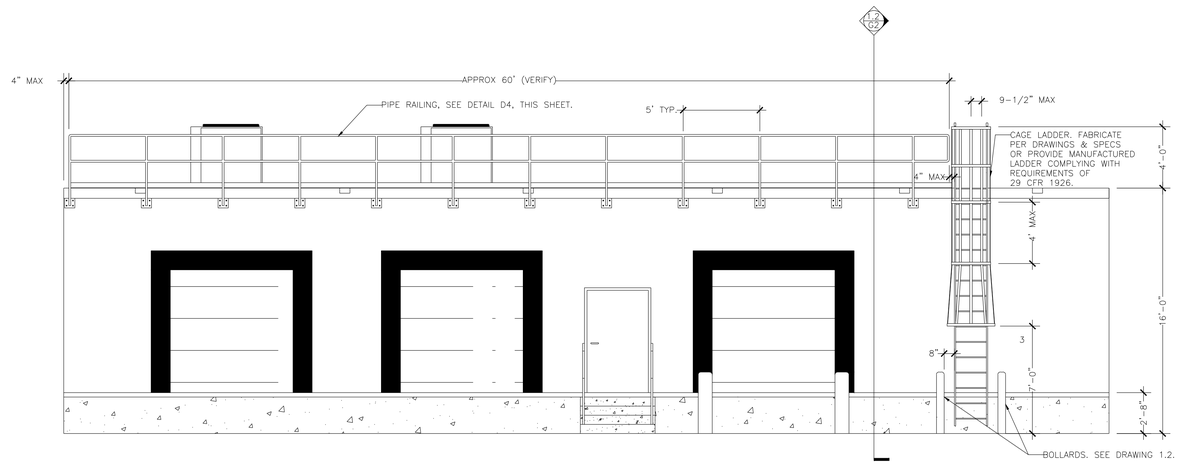

1.1 / G3 GUARDRAIL AND LADDER – FRONT ELEVATION VIEW
SCALE: $\frac{1}{4}$" = 1'

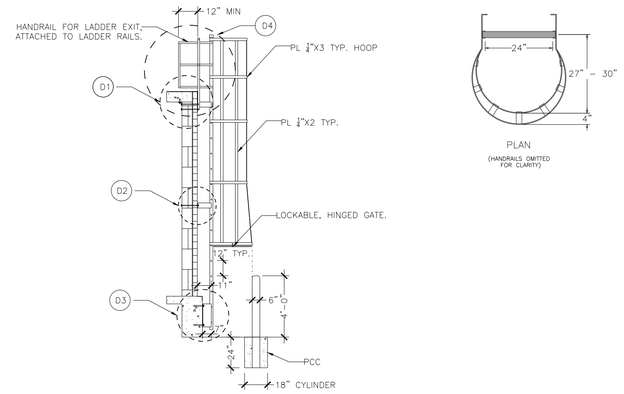

1.2 / G3 GUARDRAIL AND LADDER – SIDE ELEVATION VIEW
SCALE: $\frac{1}{4}$" = 1'

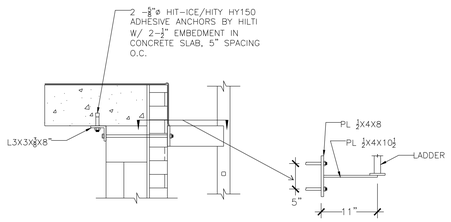

ELEVATION VIEW PLAN VIEW

D1 / G3 LADDER – TOP BRACKET
SCALE: 1" = 1'

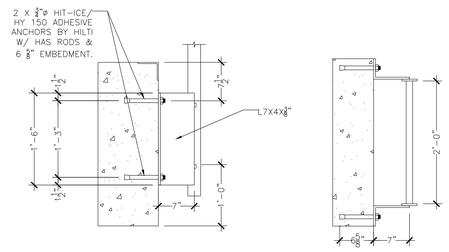

ELEVATION VIEW PLAN VIEW

D3 / G3 LADDER – BOTTOM BRACKET
SCALE: 1" = 1'

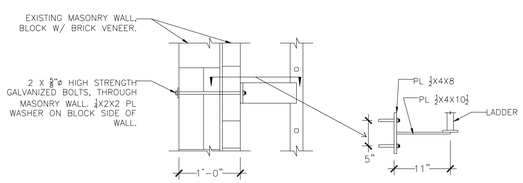

ELEVATION VIEW PLAN VIEW

D2 / G3 LADDER – MIDDLE BRACKET
SCALE: 1" = 1'

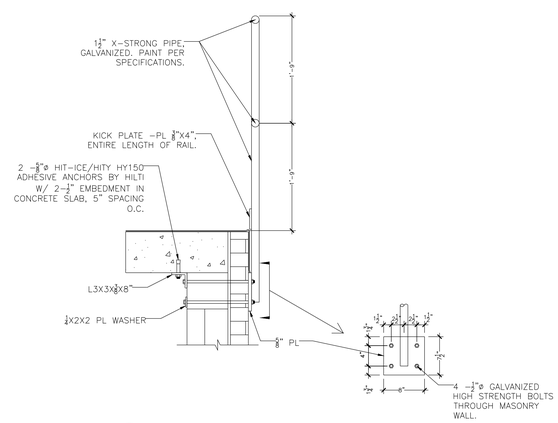

D4 / G3 RAILING AND CONNECTION
SCALE: 1" = 1'

GENERAL CONSTRUCTION NOTES

1. INSTALL GUARDRAIL AS SHOWN.
2. INSTALL CAGE LADDER AS SHOWN.
3. INSTALL PCC-FILLED STEEL BOLLARDS AS SHOWN.
4. THE CONTRACTOR SHALL INSPECT THE SITE, STUDY EXISTING CONDITIONS, REVIEW THE DRAWINGS AND SPECIFICATIONS, AND ADJUST FOR ACTUAL FIELD CONDITIONS AT NO ADDITIONAL COST TO THE OWNER. SITE ACCESS CAN BE OBTAINED BY CONTACTING THE VA CONTRACTING REPRESENTATIVE.
5. ACTUAL DIMENSIONS OF EXISTING STRUCTURE MAY VARY SLIGHTLY FROM THE DIMENSIONS SHOWN ON THESE DRAWINGS. CONTRACTOR SHALL VERIFY ALL DIMENSIONS PRIOR TO FABRICATION OF STEEL COMPONENTS. CONTRACTOR MAY MODIFY DIMENSIONS CONSISTENT WITH THE INTENT OF THESE SPECIFICATIONS TO FACILITATE FABRICATION AND ASSEMBLY.
6. ALL AREAS SHALL BE KEPT FREE OF MATERIAL AND DEBRIS. ON-SITE STORAGE OF MATERIAL AND EQUIPMENT SHALL BE LIMITED, AND ONLY IN A LOCATION(S) DESIGNATED BY THE OWNER. MATERIAL SHALL BE STORED OFF-SITE UNTIL TIME OF INSTALLATION.
7. PROTECT ALL WORK AREAS AND EQUIPMENT FROM DAMAGE.
8. ALL MATERIAL SHALL BE NEW, OF THE BEST QUALITY, AND FREE FROM DEFECTS.
9. THE CONTRACTOR SHALL BE RESPONSIBLE FOR ALL DAMAGE TO EXISTING STRUCTURES AND EQUIPMENT RESULTING FROM WORK UNDER THIS CONTRACT, AND SHALL RESTORE ANY DAMAGE TO ITS PRIOR CONDITION.
10. THE CONTRACTOR SHALL WORK WITH CONDITIONS AS THEY EXIST ON-SITE.
11. WELDS, WHERE SPECIFIED, SHALL BE CONTINUOUS FILLET WELDS WITH $\frac{3}{8}$" MINIMUM DEPTH UNLESS OTHERWISE NOTED. DEPTH OF WELDS SHALL NOT EXCEED MAXIMUM DEPTH ALLOWED BY THE AMERICAN INSTITUTE OF STEEL CONSTRUCTION. ALL WELDS, EXCEPT TO EXISTING STRUCTURE, SHALL BE SHOP-WELDED IN A CONTROLLED ENVIRONMENT AND IN A MANNER APPROPRIATE TO THE MATERIAL BEING WELDED. FIELD WELDS SHALL BE COMPLETED AS PRESCRIBED IN THE SPECIFICATIONS.
12. ALL WORK SHALL BE COMPLETED IN ACCORDANCE WITH APPLICABLE CODES, REGULATIONS, AND INDUSTRY PRACTICES.
13. ALL STEEL COMPONENTS SHALL BE HIGH STRENGTH-LOW ALLOY, HOT-DIPPED GALVANIZED (ZINC), AS SPECIFIED.
14. GALVANIZED COATING REMOVED DURING THE FABRICATION PROCESS SHALL BE REPAIRED PER THE SPECIFICATIONS.
15. ALL NUTS SHALL BE DISTORTED THREAD TYPE CENTERLOCK NUTS, FABRICATED OF THE SAME GRADE AND TYPE OF STEEL AS THE BOLTS.
16. ALL BOLT HOLES SHALL BE WITHIN $\frac{1}{16}$" OF THE BOLT DIAMETER.
17. FINISHES:
    - 17.1. PRIME AND PAINT PER SPECIFICATIONS.
    - 17.2. RAILING: DARK BRONZE
    - 17.3. PLATES AND BRACKETS: DARK BRONZE
    - 17.4. LADDER (IF PAINTABLE): DARK BRONZE
    - 17.5. LADDER SAFETY CAGE AND BOLLARDS: SAFETY YELLOW

Revisions	Date

SHEET NOTES

1. SCALE SHEET SIZE: 30"X 42"
2. DRAWING REVISED JULY 27, 2012 TO CORRECT SHEET REFERENCE AND TITLE BLOCK ERRORS. DRAWING SHEET G3 DATED JULY 20, 2012 IS RESCINDED.

Drawing Title: INSTALL GUARDRAIL LOADING DOCK ROOF

Project Title: CORRECT LIFE SAFETY CODE DEFICIENCIES PH 3

Project Number: 636-12-104

Building Number: ONE

Project Coordinator: Chaz Williamson, Staff Engineer
Omaha VAMC, 4101 Woolworth Ave, Omaha, NE 68105
Phone: 402-995-4387 (o), 402-681-7462 (c)
E-mail: chaz.williamson2@va.gov

Location: OMAHA VAMC

Date: JULY 27, 2012 | Checked: | Drawn: CMW

Drawing Number: G3

Dwg. 3 of 4

Office of Construction and Facilities Management

Department of Veterans Affairs

VA FORM 08-6231