DEPARTMENT OF VETERANS AFFAIRS

SAN FRANCISCO

BUILDING 200
DENTAL CLINIC RENOVATION

PROJECT NUMBER: 662-11-108

VICINITY MAP

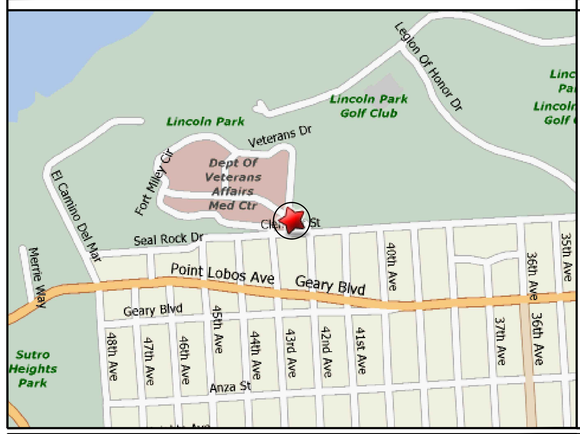

4150 CLEMENT STREET, SAN FRANCISCO, CA 94121
SCALE: NONE

SITE PLAN

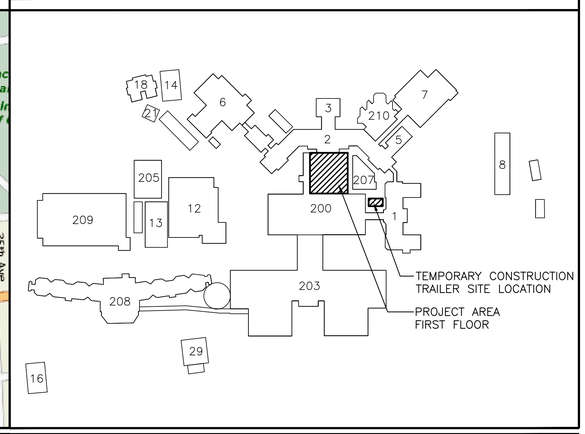

SITE LOCATION
SCALE: NONE

PROJECT GENERAL NOTES

A. CONTRACTOR IS RESPONSIBLE FOR ALL THE WORK INDICATED ON THE DRAWINGS. THE WORK DESCRIBED BY THE DRAWINGS OF ANY ONE DISCIPLINE MAY BE AFFECTED BY THE WORK DESCRIBED ON DRAWINGS OF ANOTHER DISCIPLINE AND REQUIRE COORDINATION.

B. THE SEQUENCE OF THE DRAWINGS – ORGANIZED BY DISCIPLINES AND DRAWINGS ONLY. THE SEQUENCE OF DRAWINGS IS NOT INTENDED TO SUGGEST OR REQUIRE THAT THE CONTRACTOR DIVIDE THE WORK AMONGST TRADES AND/OR SUB–CONTRACTORS IN A SIMILAR FASHION.

C. IT IS THE CONTRACTOR'S RESPONSIBILITY TO REVIEW AND COORDINATE THE WORK OF ALL SUB–CONTRACTORS, TRADES, AND SUPPLIERS WITH THE REQUIREMENTS OF THE CONTRACT BEFORE COMMENCING CONSTRUCTION, AND TO ASSURE THAT ALL PARTIES ARE AWARE OF ALL REQUIREMENTS, REGARDLESS OF WHERE THE REQUIREMENTS OCCUR IN THE CONTRACT DOCUMENTS, WHICH MIGHT AFFECT THE WORK OF THAT PARTY.

D. THE ARCH DWGS ESTABLISH AND COORDINATE THE FINISHED APPEARANCE AND LOCATION OF EXPOSED ELEMENTS OF THE WORK, INCLUDING THAT WORK WHICH IS ILLUSTRATED PRIMARILY ON DWGS OF OTHER DISCIPLINES.

E. SHEETS ARE ARRANGED AND NUMBERED IN HIERARCHICAL FASHION: BY DISCIPLINE, BY TYPE OF DRAWING, AND THEN BY SEQUENCE NUMBER WITHIN EACH GROUP OF SIMILAR DRAWINGS. SHEET NUMBERS ARE NOT CONSECUTIVE. GAPS BETWEEN GROUPS OF SHEET NUMBERS MAY OCCUR WHERE DRAWING TYPES ARE NOT APPLICABLE TO THE PROJECT.

F. FOR GENERAL NOTES, SYMBOLS, AND DEFINITIONS APPLICABLE ONLY TO THE DRAWINGS OF ONE DISCIPLINE, REFER TO THE DRAWINGS OF EACH DISCIPLINE – SEE "INDEX OF DRAWINGS" AT LEFT.

G. CONDITIONS AND DIMENSIONS ARE ASSUMED TO BE AS SHOWN ON EXISTING DRAWINGS FOR ORIGINAL CONSTRUCTION AND RETROFIT CONSTRUCTION. DRAWINGS INCLUDE ARCHITECTURAL, STRUCTURAL, MECHANICAL, PLUMBING, AND ELECTRICAL.

H. ALL CONDITIONS ASSOCIATED WITH ANY AREA SHALL BE VERIFIED BY THE CONTRACTOR PRIOR TO PROCEEDING WITH THE WORK IN THAT AREA.

I. CONTRACTOR IS RESPONSIBLE FOR THE COORDINATION OF THE CONTRACTORS TRAILER SITE LOCATION WITH THE COTR BEFORE COMMENCING CONSTRUCTION,

DRAWING INDEX

NUMBER	GENERAL
200–G–10–0.0	SITE MAP, VICINITY MAP, DRAWING INDEX, AND PROJECT DISCRIPTION
200–G–10–0.1	CONSTRUCTION PHASING PLAN
	ARCHITECTURAL
200–A–30–0.1	EXITING PLAN
200–A–30–1.0	NEW WORK FLOOR PLAN
200–A–30–1.1	NEW REFLECTED CEILING PLAN
200–A–30–2.0	FINISH PLAN + FINISH SCHEDULE AND NOTES
200–A–30–3.0	ARCHITECTURAL CONSTRUCTION DETAILS
200–A–30–3.1	ARCHITECTURAL CONSTRUCTION DETAILS, DOOR AND WINDOW SCHEDULES
200–A–30–4.0	DENTAL LABORATORY PLAN AND SECTIONS
200–A–30–4.1	CASE WORK DETAILS
200–A–30–4.2	CASE WORK DETAILS
200–AD–30–1.0	ARCHITECTURAL DEMOLITION FLOOR PLAN
200–AD–30–1.1	ARCHITECTURAL DEMOLITION CEILING PLAN
	STRUCTURAL
200–S–40–1.0	SEISMIC ANCHOR LOCATION, NOTES, DETAILS AND SECTIONS
200–S–40–2.0	SEISMIC ANCHOR DETAILS AND SECTIONS
	ELECTRICAL
200–E–60–0.0	GENERAL NOTES, ABBREVIATIONS, SYMBOLS, DRAWING INDEX & EQUIPMENT SCHEDULE
200–E–60–0.1	EXISTING PARTIAL ONE LINE DIAGRAM
200–E–60–0.2	PANEL SCHEDULES
200–E–60–1.0	POWER FLOOR PLAN
200–E–60–1.1	LIGHTING FLOOR PLAN
200–E–60–1.2	COMUNICATION AND DATA CABLING PLAN

DRAWING INDEX

200–E–60–2.0	PARTIAL PENTHOUSE DEMOLITION PLAN AND NEW WORK ROOF PLAN.
200–ED–60–1.0	POWER AND LIGHTING DEMOLITION PLAN
NUMBER	PIPING
200–P–70–0.0	PLUMBING GENERAL NOTES, ABBREVIATIONS, SYMBOLS AND EQUIPMENT SCHEDULE.
200–P–70–0.1	DOMESTIC WATER ISOMETRIC
200–P–70–0.2	WASTE AND VENT ISOMETRIC
200–P–70–0.3	MEDICAL GASES ISOMETRIC
200–P–70–1.0	WASTE, VENT AND DOMESTIC WATER NEW WORK PLAN
200–P–70–2.0	MEDICAL GASES NEW WORK FLOOR PLAN
200–P–70–2.1	MEDICAL GASES NEW WORK FLOOR PLAN
200–P–70–3.0	FIRE PROTECTION NEW WORK PLAN
200–P–70–4.0	PNEUMATIC SYSTEM RELOCATION PLAN AND DETAILS
200–P–70–5.0	PIPING WASTE/VENT, MEDICAL GASES ISOMETRICS AND DETAILS
200–PD–70–1.0	WASTE/VENT AND DOMESTIC WATER DEMOLITION PLAN
200–PD–70–2.0	MEDICAL GASES DEMOLITION PLAN
200–PD–70–3.0	FIRE PROTECTION DEMOLITION PLAN
	MECHANICAL
200–H–80–0.0	GENERAL NOTES, ABBREVIATIONS, SYMBOLS AND EQUIPMENT SCHEDULE
200–H–80–0.01	MECHANICAL CONTROL DIAGRAM
200–H–80–0.1	AIR FLOW DIAGRAM
200–H–80–1.0	HVAC 2ND FLOOR PARTIAL PLAN
200–H–80–2.0	HVAC PENTHOUSE AND BASEMENT PARTIAL PLANS
200–H–80–3.0	MECHANICAL DETAILS
200–HD–80–1.0	HVAC 2ND FLOOR PHASE 1 DEMOLITION PLAN
200–HD–80–2.0	HVAC 2ND FLOOR PHASE 2 DEMOLITION PLAN

PROJECT DATA

OCCUPANCY:	B
BUILDING 200:	I–2
CONSTRUCTION TYPE:	1–A
FULLY SPRINKLERED BUILDINGS	
NUMBER OF STORIES: BUILDING 200:	4 STORIES
AREA OF WORK (APPROXIMATE):	
1ST FLOOR:	5,000 SF

PROJECT DESCRIPTION

THE PROJECT CONSISTS OF THE FOLLOWING:

- RENOVATION OF APPROXIMATELY 5000 SqFt OF DENTAL CLINIC SPACE IN BUILDING 200, FIRST FLOOR, SAN FRANCISCO VA MEDICAL CENTER (SF VA MC). DRAWINGS REFERENCE PHASE 1 AND PHASE 2 FOR SEQUENCE OF WORK IN CONTRACT.
- DEMOLITION, RELOCATION AND INSTALLATION OF PROCESS PIPING AND OTHER UTILITIES SYSTEMS SUCH AS ELECTRICAL, PLUMBING AND MECHANICAL TO ACCOMMODATE NEW DENTAL CLINIC REQUIREMENTS AND VA DESIGN CRITERIA.
- MODIFICATION TO FIRE SPRINKLER SYSTEM, FIRE ALARM AND ACCESS AS REQUIRED TO SERVE THE NEW FLOOR LAYOUT.
- FIRE SPRINKLER PIPE MODIFICATIONS IS A DIFFERED SUBMITTAL TO BE PREPARED BY A DESIGN BUILD FIRE SPRINKLER CONTRACTOR.

APPLICABLE CODES

2010 CALIFORNIA BUILDING CODE
2010 CALIFORNIA BUILDING CODE
2010 CALIFORNIA FIRE CODE
2010 CALIFORNIA MECHANICAL CODE
2010 CALIFORNIA PLUMBING CODE
2008 NATIONAL ELECTRIC CODE

ISSUE FOR BID	04/17/12
ISSUE FOR 100% REVIEW	02/9/12
ISSUE FOR 95% REVIEW	12/9/11
ISSUE FOR 65% REVIEW	07/7/11
ISSUE FOR 35% REVIEW	03/24/11
Revisions:	Date

CONSULTANTS:

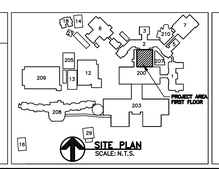

LICENSED ARCHITECT JIM D. MORELAND NO. C5471 REN. 12/13 STATE OF CALIFORNIA
STAMP

ARCHITECT/ENGINEERS:

ADVANCE DESIGN CONSULTANTS, INC
PROFESSIONAL ENGINEERS
998 PARK AVENUE SAN JOSE, CA 95126
(408) 297–1881 FAX: (408) 294–3186
WWW.ADCENGINEERS.COM

ATTENTION:
ONLY WET SIGNED DOCUMENTS CONSTITUTE ADVANCE DESIGN CONSULTANTS, INC. PROFESSIONAL WORK AND BECAUSE OTHER REPRODUCIBLE DOCUMENTS MAY BE EASILY ALTERED WITHOUT THE CONSENT OF ADVANCE DESIGN CONSULTANTS, INC. THE WET SIGNED DOCUMENTS MUST BE REFERRED TO FOR THE ORIGINAL AND CORRECT INFORMATION. IF THERE ANY DIFFERENCES BETWEEN THE WET SIGNED DOCUMENTS AND ANY OTHER DOCUMENTS, THE WET SIGNED DOCUMENTS SHALL GOVERN.

ADVANCE DESIGN CONSULTANTS, INC. IS NOT RESPONSIBLE FOR ANY MODIFICATIONS MADE TO OUR DOCUMENTS BY ANYONE OTHER THAN AUTHORIZED REPRESENTATIVES OF ADVANCE DESIGN CONSULTANTS, INC.

Drawing Title:
GENERAL
SITE MAP, VICINITY MAP, DRAWING INDEX AND PROJECT DESCRIPTION

Approved Project Director:

Project Title:
BUILDING 200
DENTAL CLINIC

Location:
4150 CLEMENT ST. SAN FRANCISCO, CA

Date: NOVEMBER 2011
Checked: L. RIOS
Drawn: R. RIOS

Project Number: 662-11-108
Building Number: 200
Drawing Number: 200-G-10-0.0
Dwg. 01 of 44

Office of Construction and Facilities Management
Department of Veterans Affairs

VA FORM 08–6231

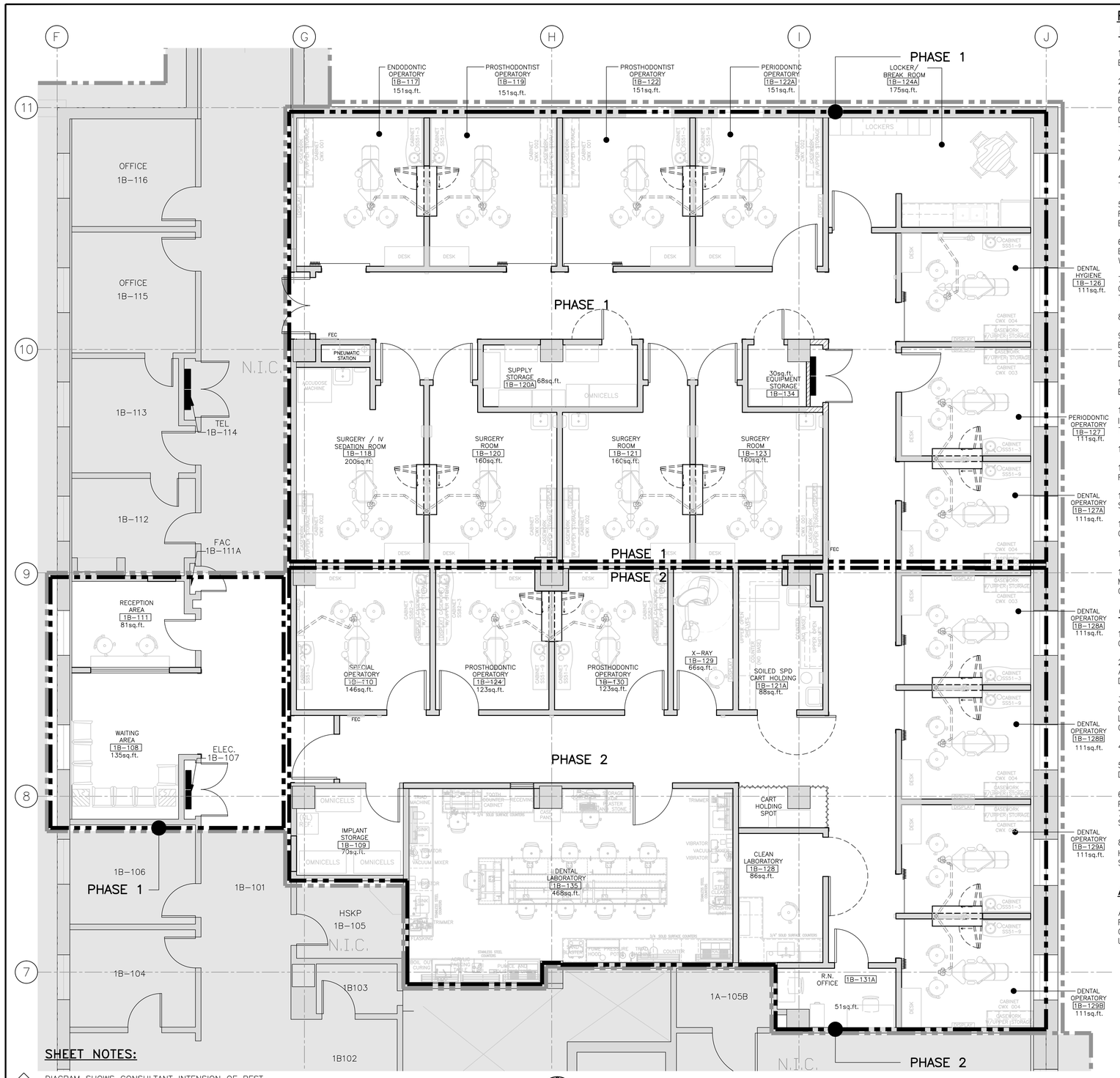

SHEET NOTES:

1. DIAGRAM SHOWS CONSULTANT INTENSION OF BEST ROUTE. CONTRACTOR TO HAVE PRE–DEMOLITION MEETING WITH S.F. V.A. STAFF TO VERIFY LOCATION OF PHASING CONSTRUCTION.
2. CONTRACTOR SHALL PROVIDE VERTICAL SEPARATION BARRIER FOR PHASING CONSTRUCTION.

PHASING PLAN
SCALE: 1/4" = 1'–0"

POWER & SIGNAL FURNITURE & EQUIPMENT PLAN NOTES:

1. FREESTANDING FURNITURE AND DENTAL EQUIPMENT TO BE SUPPLIED BY THE V.A. U.O.N. AND IS SHOWN FOR REFERENCE ONLY.

2. REFER TO ELECTRICAL DRAWINGS FOR THE FOLLOWING:
A. WIRING AND CIRCUITING LAYOUT.
B. SWITCHING
C. PULL BOXES
D. ELECTRICAL AND TELECOMMUNICATIONS OUTLET/DEVICE LOCATIONS, TYPE AND CONDUIT RUNS.

3. REFER TO MECHANICAL AND PLUMBING DRAWINGS FOR MECHANICAL AND PLUMBING EQUIPMENT AND REQUIREMENTS.

4. FIELD VERIFY FLOOR POWER AND SIGNAL OUTLET LOCATIONS WITH THE COTR PRIOR TO CORING.

5. THE GENERAL CONTRACTOR SHALL VERIFY EXACT FIELD CONDITIONS FOR SWITCH AND FIXTURE RELATIONSHIP AS WELL AS TELEPHONE AND ELECTRICAL OUTLETS. REPORT DISCREPANCIES TO THE COTR.

6. THE GENERAL CONTRACTOR SHALL LOCATE ALL TELEPHONE & ELECTRICAL OUTLETS AT FLOOR & PARTITIONS AND VERIFY LOCATIONS WITH COTR BEFORE PROCEEDING WITH THE WORK.

7. ALL TELEPHONE AND SPECIAL INSTALLATION WORK SHALL BE COORDINATED BY THE GENERAL CONTRACTOR WITH THE COTR AND THEIR VENDORS.

8. COVERPLATES SHALL BE WHITE U.O.N.

9. IN CASE OF CONFLICT BOWEN ARCHITECTURAL PLANS AND ELECTRICAL AND MECHANICAL PLANS AS REGARDS LOCATION OF SWITCHES, T–STATS, LIGHT FIXTURES, ELECTRICAL OUTLETS AND DEVICES, THE ARCHITECTURAL PLANS SHALL GOVERN.

10. ALL WALL MOUNTED ELECTRICAL AND TELEPHONE OUTLETS SHALL BE VERTICALLY MOUNTED AT 18. A.F.F. U.O.N.

11. ALL WALL MOUNTED ELECTRICAL AND TELEPHONE OUTLETS INDICATED 30" OR MORE A.F.F. TO BE INSTALLED HORIZONTALLY. AT THE INDICATED HEIGHT A.F.F. TO THE CENTERLINE OF COVERPLATE.

12. OUTLETS SHALL BE OFF–SET AND NOT MOUNTED BACK TO BACK.

13. PROVIDE ACOUSI1CAL SOUND PADS AT ALL OUTLETS LOCATED IN FULL HEIGHT PARTITIONS.

14. TELEPHONE & DATA CABLING TO BE TIED INDEPENDENTLY TO STRUCTURE PER CODE.

15. PROVIDE TELEPHONE AND DATA CABLING THAT MAY BE USED IN CEILING PLENUMS WITHOUT CONDUITS.

16. ELECTRICAL OUTLETS AT WET AREAS (E.G. SINKS) TO BE GFI TYPE.

17. SCHEDULE THE CORING FOR ELECTRICAL AND TELEPHONE FLOOR MOUNTED OUTLETS AND THE RELATED CEILING WORK FOLLOWING FIELD CONFIRMATION OF OUTLET LOCATIONS WITH FURNITURE VENDOR.

GENERAL NOTES FOR INTERIOR PROJECTS:

1. ALL NEW CONSTRUCTION IS SHOWN SOLID DARK LINES. ALL EXISTING CONSTRUCTION TO REMAIN IS SHOWN SCREENED.

2. ALL DIMENSIONS SHOWN RELATING TO EXISTING CONSTRUCTION ARE APPROXIMATE. THE CONTRACTOR SHALL FIELD VERIFY ALL ACTUAL DIMENSIONS.

3. ALL DIMENSIONS ARE FACE OF FINISH, FACE OF CONCRETE, TO CENTER LINES OF COLUMNS AND OTHER GRID POINTS AND TO CENTER LINES OF DOORS AND OTHER SCHEDULED OPENINGS UNLESS OTHERWISE NOTED.

4. OFFSET STUDS WHERE REQUIRED TO ALIGN FINISH MATERIAL.

5. PROVIDE BACKING IN WALLS FOR ALL WALL MOUNTED ITEMS AS DETAILED.

6. ALL DOORS ARE LOCATED 4" ON HINGED SIDE FROM ALL PERPENDICULAR TO THE DOOR UNLESS OTHERWISE NOTED.
7. CEILING HEIGHTS ARE MEASURED TO BOTTOM OF FINISH OR SUSPENDED CEILING TEE.

8. IN CEILINGS, LOCATE PENETRATING ITEMS (FUTURES, SPRINKLER HEADS, ETC.) IN PATTERNS SHOWN ON REFLECTED CEILING PLAN OR AS SCHEDULED.

ABBREVIATIONS:

A.F.F	ABOVE FINISH FLOOR
F.E.C.	FIRE EXTINGUISHER CABINET
C.O.T.R.	CONTRACTING OFFICER TECHNICAL REPRESENTATIVE
U.O.N.	UNLESS OTHERWISE NOTED

GENERAL NOTES:

1. SITE VISIT:
THE CONTRACTOR SHALL VISIT THE SITE, VERIFY ALL EXISTING CONDITIONS AS SHOWN ON DRAWINGS, AND REPORT ANY DISCREPANCIES BETWEEN THE FIELD CONDITIONS AND THE DRAWINGS TO THE COTR.

2. CODE COMPLIANCE:
ALL WORK SHALL CONFORM WITH THE CURRENT EDITIONS OF THE CODE, SEE APPLICABLE CODES AT PROJECT DATA. THE RULES AND REGULATIONS OF THE SAFETY ORDERS ISSUED BY THE DIVISION OF INDUSTRIAL SAFETY, AND THE NATIONAL BOARD OF UNDERWRITERS. THE CONTRACTOR SHALL COMPLY WITH THESE AND ALL OTHER NATIONAL, STATE, AND LOCAL CODES.

WHERE UL GA. OR UBC CONSTRUCTION ASSEMBLIES ARE DESIGNATED. THE COMPONENTS AND INSTALLATION DETAILS SHALL CONFORM IN EVERY PARTICULAR WITH THE DESIGN NUMBER SPECIFIED.

3. CONSTRUCTION SCHEDULE:
ALL WORK SHALL BE PERFORMED DURING WORKING HOURS EXCEPT WHERE NOTED ON DRAWINGS, CONTRACTS, AND SPECIFICATIONS. ANY OVERTIME SHALL COMMENCE ONLY WITH PRIOR APPROVAL BY COTR.

4. OVERTIME WORK:
THE CONTRACTOR SHALL SCHEDULE ANY WORK WHICH INTERFERES WITH V.A. OPERATIONS (INCLUDING BUILDING UTILITY SHUT–DOWN. EXCESSIVE NOISE, ETC.) WITH PRIOR APPROVAL BY COTR.

5. SCHEDULE OF WORK:
COORDINATE THE CONSTRUCTION SCHEDULE AND OPERATIONS SCHEDULE WITH THE COTR. ALL WORK SHALL BE CONSTRUCTED IN PHASES TO ACCOMMODATE V.A.'S REQUIREMENTS. COORDINATE ALL SERVICE SHUT–DOWNS WITH THE COTR.

6. "AS–BUILT" CONSTRUCTION SET:
THE CONTRACTOR SHALL POSSESS AND MAINTAIN. AT THE JOB SITE, A CURRENT "AS–BUILT" DRAWING SET. THIS SET SHOULD REFLECT ALL APPROVED DESIGN DRAWING CHANGES. THIS SET IS TO BE KEPT IN GOOD CONDITION AND SHALL BE DELIVERED TO OWNER WITHIN TWO WEEKS AFTER THE COMPLETION OF THE PROJECT.

7. SEISMIC BRACING:
ALL NEW CONSTRUCTION SHALL BE IN STRICT ACCORDANCE WITH IBC EARTHQUAKE RESISTANT DESIGN. CONSTRUCTION STANDARDS, AND SPECIFICATIONS FOR SEISMIC BRACING AND SUPPORT OF ALL ARCHITECTURAL, STRUCTURAL MECHANICAL, PIPING. AND ELECTRICAL WORK. PROVIDE SEISMIC ANCHORS AT ALL TOOLS. BENCHES. AND SHELVES AS REQUIRED.

8. MATERIALS AND METHODS:
ALL MATERIALS FOR THIS CONSTRUCTION SHALL BE NEW, EXCEPT CRUSHED SITE CONCRETE TO BE REUSED. OWNER RESERVES THE RIGHT TO APPROVE ALL MATERIALS WHICH SHALL BE IN STRICT ACCORDANCE WITH V.A. SPECIFICATIONS OR AS NOTED ON THE CONSTRUCTION DOCUMENTS IF ANY PORTION OF THE WORK (EITHER THE MATERIALS OR THE METHODS OF INSTALLATION) IS DETERMINED TO BE DEFECTIVE THE CONTRACTOR SHALL REPLACE THAT PORTION, WITH NO ADDITIONAL COST TO V.A. AS PART OF THE ORIGINAL CONTRACT.

9. EXISTING CONDITIONS:
THE VARIOUS PLANS ARE NOT INTENDED AS SURVEYS OF ALL EXISTING CONDITIONS AND ONLY INDICATE IN GENERAL CERTAIN CONDITIONS RELATED TO THE WORK TO BE DONE. INFORMATION REGARDING EXISTING CONDITIONS HAS BEEN DETERMINED AS REASONABLY AS POSSIBLE, BUT MAY NOT BE SHOWN EXACTLY. CONTRACTOR SHALL FAMILIARIZE HIMSELF WITH ALL EXISTING CONDITIONS AND REPORT ALL DISCREPANCIES TO THE COTR PRIOR TO THE START OF WORK.

10. UTILITIES:
THE LOCATION SHOWN FOR EXISTING UTILITY MAINS ARE APPROXIMATE ONLY. THE ACCURACY OR COMPLETENESS OF THIS INFORMATION IS NOT GUARANTEED. VERIFY LOCATION OF ALL UTILITY LINES, CONDUITS, SURFACE OR SUBSURFACE STRUCTURES, ETC., OF ANY NATURE THAT MAY BE AFFECTED BY THE WORK. VERIFY ACTUAL LOCATION AND DEPTH, AND REPORT POTENTIAL CONFLICTS TO THE ENGINEER PRIOR TO EXCAVATING FOR NEW FACILITIES.

11. DAMAGED UTILITIES / SYSTEMS:
SHOULD ANY OF THE ABOVE ITEMS BE DISTURBED. DISCONNECTED. OR DAMAGED DURING CONSTRUCTION, THE CONTRACTOR SHALL IMMEDIATELY NOTIFY PROPER AUTHORITIES AND THOSE PARTIES AFFECTED. CONTRACTOR SHALL BEAR ALL EXPENSES, OF WHATEVER NATURE, ARISING FROM SUCH DISTURBANCE, REPLACEMENT. OR REPAIR THEREOF, AND REPLACE OR REPAIR SUCH ITEMS AS REQUIRED.

12. UNIDENTIFIED ITEMS:
SHOULD ANY UNIDENTIFIED ITEM BE ENCOUNTERED DURING CONSTRUCTION. DO NOT PROCEED UNTIL THE COTR HAS BEEN NOTIFIED AND DIRECTION HAS BEEN GIVEN.

13. ACCESS DOORS:
COORDINATE ACCESS DOOR LOCATIONS (FOR CONCEALED ITEMS) WITH APPROPRIATE CONTRACTOR.

14. DUST CONTROL:
CONTRACTOR SHALL PROVIDE DUST CONTROL AT ALL TIMES.

15. CONSTRUCTION DOCUMENTS:
THE CONSTRUCTION DOCUMENTS CONSIST OF THESE DRAWINGS AND THE PROJECT MANUAL FOR THIS ISSUANCE. DRAWINGS REPRESENT THE QUANTITY AND LOCATION OF THE WORK. THE PROJECT MANUAL INDICATES THE QUALITY OF THE WORK. ALL TRADES SHALL BE REQUIRED TO MEET THE REQUIREMENTS OF THESE DOCUMENTS AND SUBSEQUENT INFORMATION PROVIDED FOR THIS PROJECT.

21. RATED DOORS SHALL HAVE SMOKE SEAL TO COMPLY WITH POSITIVE PRESSURE AS REQUIRED PER UBC STANDARD 7–2 RATED WALL SHALL COMPLY WITH UBC SECTION 706 FOR FIRE RESISTIVE JOINT SYSTEM.

22. ALL RATED DOOR ASSEMBLY SHALL HAVE "S" LABEL AS PER CODE SECTION 715.4.5.3. COMPLY WITH NFPA 80 & UL 1784.

Revisions:	Date
ISSUE FOR BID	04/17/12
ISSUE FOR 100% REVIEW	02/9/12
ISSUE FOR 95% REVIEW	12/9/11
ISSUE FOR 65% REVIEW	07/7/11
ISSUE FOR 35% REVIEW	03/24/11

VA FORM 08–6231

CONSULTANTS:

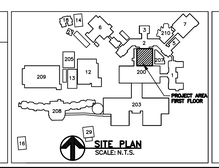

SITE PLAN
SCALE:N.T.S.

LICENSED ARCHITECT JIM D. MORELAND NO. C5471 REN. 12/13 STATE OF CALIFORNIA

STAMP

ARCHITECT/ENGINEERS:

ADVANCE DESIGN CONSULTANTS, INC
PROFESSIONAL ENGINEERS
998 PARK AVENUE SAN JOSE, CA 95126
(408) 297–1881 FAX: (408) 294–3186
WWW.ADCENGINEERS.COM

ATTENTION:
ONLY WET SIGNED DOCUMENTS CONSTITUTE ADVANCE DESIGN CONSULTANTS, INC. PROFESSIONAL WORK AND BECAUSE OTHER REPRODUCIBLE DOCUMENTS MAY BE EASILY ALTERED WITHOUT THE CONSENT OF ADVANCE DESIGN CONSULTANTS, INC., THE WET SIGNED DOCUMENTS MUST BE REFERRED TO FOR THE ORIGINAL AND CORRECT INFORMATION. IF THERE ANY DIFFERENCES BETWEEN THE WET SIGNED DOCUMENTS AND ANY OTHER DOCUMENTS, THE WET SIGNED DOCUMENTS SHALL GOVERN.

ADVANCE DESIGN CONSULTANTS, INC. IS NOT RESPONSIBLE FOR ANY MODIFICATIONS MADE TO OUR DOCUMENTS BY ANYONE OTHER THAN AUTHORIZED REPRESENTATIVES OF ADVANCE DESIGN CONSULTANTS, INC.

Drawing Title:
GENERAL CONSTRUCTION PHASING PLAN

Approved Project Director:

Project Title:
BUILDING 200
DENTAL CLINIC

Location:
4150 CLEMENT ST. SAN FRANCISCO, CA

Date: NOVEMBER 2011 | Checked: L. RIOS | Drawn: J.AGUIRRE

Project Number: 662–11–108
Building Number: 200
Drawing Number: 200–G–10–0.1
Dwg. 02 of 44

Office of Construction and Facilities Management
Department of Veterans Affairs

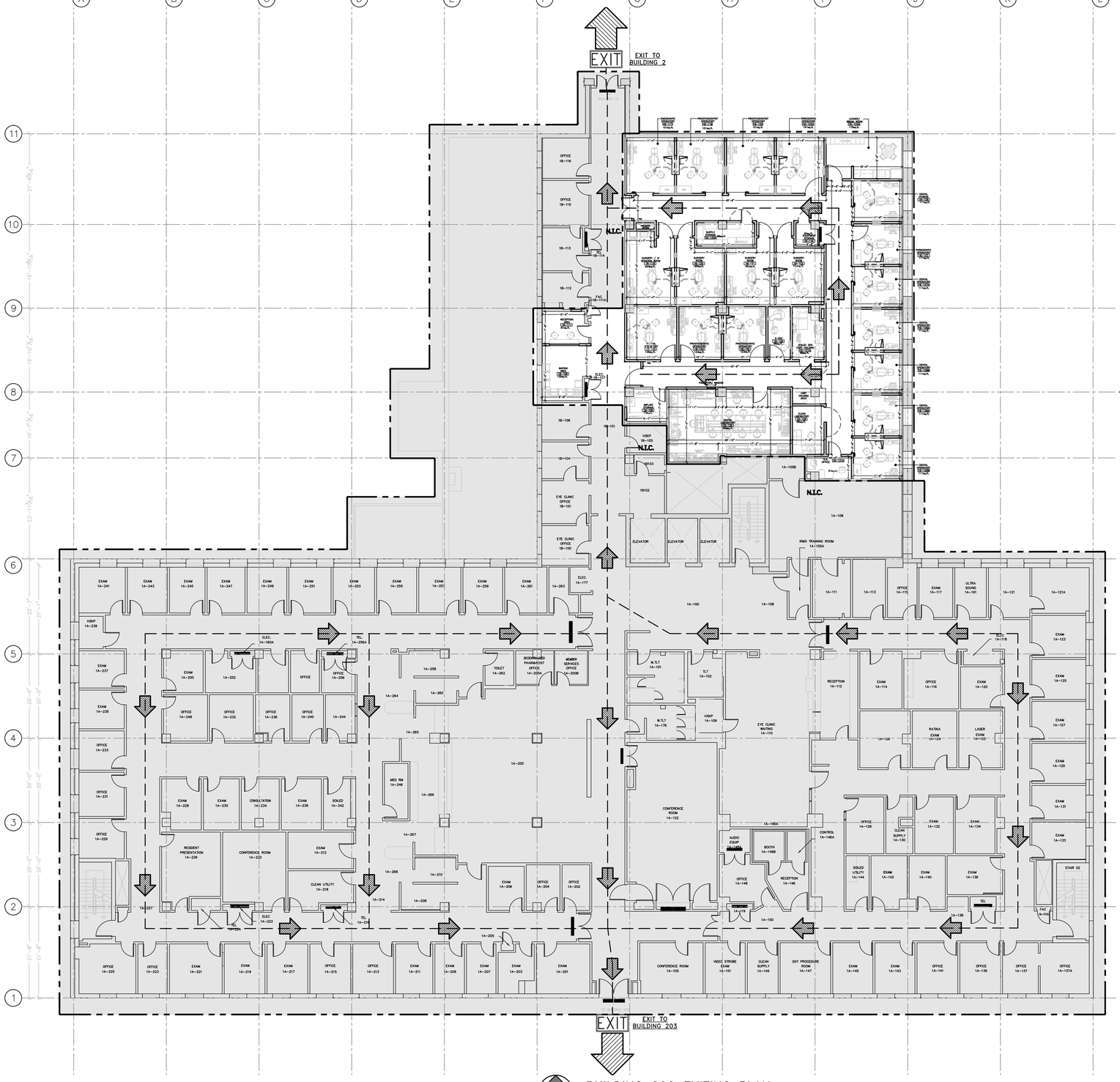

BUILDING 200 EXITING PLAN

SCALE: 3/32" = 1'-0"

GENERAL NOTES – CODE COMPLIANCE PLANS:

1. ALL REQUIRED SITE ACCESSIBLE ROUTES OF TRAVEL FROM DISABLED PARKING STALLS & ADJACENT PUBLIC SIDEWALKS ARE CONSIDERED IN FULL COMPLIANCE AS COMPLETED UNDER PREVIOUS PERMITS FOR THIS BUILDING.

2. WHERE UL, GA, OR CBC CONSTRUCTION ASSEMBLIES ARE DESIGNATED, THE COMPONENTS AND INSTALLATION DETAILS MUST CONFORM IN EVERY PARTICULAR WAY WITH THE DESIGN NUMBER SPECIFIED.

3. THE CONTRACTOR SHALL PROVIDE ALL REQUIRED DRY CHEMICAL UL RATED 3A:40B–C FIRE EXTINGUISHERS & CABINETS AT OFFICE AREAS & CORRIDORS; 4A–60B:C FIRE EXTINGUISHERS & CABINETS AT LABORATORY AREAS. SEE THIS SHEET FOR PROPOSED LOCATIONS OF FIRE EXTINGUISHER CABINETS: FINAL NUMBER, TYPE & EXACT LOCATION TO BE BY FIELD INSPECTOR.

4. PROVIDE ALL REQUIRED FIRE ALARMS, EMERGENCY LIGHTING AND EXIT SIGNAGE PER ELECTRICAL DRAWINGS.

5. THE INTERIOR ACCESSIBLE ROUTES OF TRAVEL CONNECT ALL PUBLIC SPACES, TOILET & BREAK ROOM FACILITIES. SEE ACCESSIBLE ROUTES OF TRAVEL, CODE AND EXITING INFORMATION THIS SHEET.

6. PROVIDE MINIMUM 18" STRIKE SIDE CLEARANCE AT SWING SIDE OF ALL INTERIOR DOORS, AND MINIMUM 12" AT PUSH SIDE (ON DOORS WITH CLOSERS) FOR HANDICAPPED ACCESSIBILITY. PROVIDE MINIMUM 24" STRIKE SIDE CLEARANCE AT ALL EXTERIOR DOORS FOR HANDICAPPED ACCESSIBILITY.

7. REFERENCE STRUCTURAL, MECHANICAL & ELECTRICAL DRAWINGS FOR ADDITIONAL INFORMATION.

8. PROVIDE 5% MIN. OF TOTAL EMPLOYEE WORKSURFACES TO BE BETWEEN 28" AND 34" A.F.F. PER CBC 1123B.2.

9. ALL EXTERIOR PATHS OF TRAVEL ARE ACCESSIBLE.

FIRE DEPARTMENT NOTES:

1. HARDWARE:
REFER TO THE DOOR & FRAME SCHEDULE ON SHEET A–3.1 FOR NOTES.

2. EXIT SIGNS:
THE PATH OF TRAVEL TO & WITHIN EXITS IN A BUILDING SHALL BE IDENTIFIED BY EXIT SIGNS CONFORMING TO THE REQUIREMENTS OF CURRENT C.B.C. . EXIT SIGNS SHALL BE READILY VISIBLE FROM THE DIRECTION OF APPROACH & LOCATED AS NECESSARY TO INDICATE THE DIRECTION OF EGRESS TRAVEL. NO POINT SHALL BE MORE THAN 100' FROM THE NEAREST VISIBLE SIGN.

3. MEANS OF EGRESS ILLUMINATION:
ILLUMINATED AT AN INTENSITY OF NO LESS THAN 1 FT-CANDLE AT FLOOR LEVEL.

4. ILLUMINATION POWER SUPPLY:
POWER SUPPLY FOR MEANS OF EGRESS ILLUMINATION SHALL NORMALLY BE PROVIDED BY THE PREMISES' ELECTRICAL SUPPLY. IN THE EVENT OF ITS FAILURE, ILLUMINATION TO BE AUTOMATICALLY PROVIDED FROM AN EMERGENCY SYSTEM WHERE THE EXITING SYSTEM SERVES AN OCCUPANT LOAD OF 100 OR MORE.

5. AISLES WITHOUT FIXED SEATS:
AISLES SERVING AS A PORTION OF AN EXIT ACCESS IN THE MEANS OF EGRESS SYSTEM SHALL BE IN ACCORDANCE WITH CURRENT CBC

6. FIRE EXTINGUISHERS:
ALL PORTIONS OF THE BUILDING SHALL BE WITHIN 75' OF A FIRE EXTINGUISHER. THE MIN. SIZE OF EXTINGUISHER TO BE 2A10BC.

7. SPRINKLER ALTERATION APPROVAL:
ALTERATIONS TO THE EXISTING AUTOMATIC FIRE SPRINKLER SYSTEM TO BE SUBMITTED AS SHOP DRAWINGS FOR COTR APPROVAL PRIOR TO MAKING ALTERATIONS.

8. AUTOMATIC SHUT–OFFS:
EACH SINGLE SYSTEM PROVIDING HEATING OR COOLING AIR IN EXCESS OF 2,000 CUBIC FT/MIN. SHALL BE EQUIPPED WITH AN AUTOMATIC SHUTOFF ACTIVATED BY SMOKE DETECTORS.

9. ADDRESS:
APPROVED NUMBERS OR ADDRESSES SHALL BE PLACED ON ALL NEW & EXISTING BUILDINGS IN SUCH A POSITION TO BE VISIBLE & LEGIBLE FROM THE STREET OR ROAD FRONTING THE PROPERTY.

LEGEND:

USE	– USE PER CBC TABLE 1004.1.1
RATIO	– OCCUPANT LOAD FACTOR
AREA	– AREA IN SQUARE FEET
OCCUPANTS	– NUMBER OF OCCUPANTS
# EXITS	– NUMBER OF EXITS REQUIRED

AREA SHADED INDICATES NOT IN CONTRACT

AREA OF WORK

PATH OF TRAVEL

EGRESS ACCESSIBLE CODE COMPLIANCE:

1. EXCEPT AS SPECIFICALLY PERMITTED BY THIS SECTION EGRESS DOORS SHALL BE READILY OPENABLE FROM THE EGRESS SIDE WITHOUT THE USE OF A KEY OR SPECIAL KNOWLEDGE OR EFFORT.
CBC_1008.1.9 DOOR OPERATIONS.

2. FIRE DOORS SHALL HAVE A MINIMUM OPENING FOR ALLOWABLE BY THE APPROPRIATE ADMINISTRATIVE AUTHORITY, NOT TO EXCEED 15 LBF.
OTHER THAN REQUIRED FIRE DOORS, INTERIOR AND EXTERIOR DOORS SHALL HAVE A MAXIMUM OPENING FORCE OF 5 LBF.
CBC_1133B.2.5 DOOR OPENING FORCE.

3. DOORWAYS SHALL HAVE A MINIMUM CLEAR OPENING OF 32" WITH THE DOOR OPEN 90 DEGREES, MEASURED BETWEEN FACE OF DOOR TO THE OPPOSITE STOP.
CBC_1133B.1.1.1 ENTRANCES AND EXTERIOR GROUND FLOOR EXIT DOORS.

4. EXISTING FACILITIES ARE IN FULL COMPLIANCE WITH CURRENT DISABLED ACCESS REGULATIONS PER **CHAPTER 11 CBC 2010.**

5. THE HIGHEST OPERABLE PART OF ALL CONTROL, DISPENSER, RECEPTACLES AND OTHER OPERABLE EQUIPMENT SHALL BE PLACED WITHIN AT LEAST ONE OF THE REACH RANGES SPECIFIED IN SECTIONS 1118B.5 AND 1118B.6
CBC_1117B.6.3 CONTROLS AND OPERATING MECHANISM.

6. IF THE CLEAR FLOOR SPACE ALLOWS ONLY FORWARD APPROACH TO AN OBJECT, THE MAXIMUM HIGH FORWARD REACH ALLOWED SHALL BE 48 INCHES. MINIMUM LOW FORWARD REACH IS 15 INCHES.
CBC_1118B.5 FORWARD REACH.

7. IF THE CLEAR FLOOR SPACE ALLOWS PARALLEL APPROACH BY A PERSON IN A WHEELCHAIR, THE MAXIMUM HIGH SIDE REACH ALLOWED SHALL BE 54 INCHES AND THE LOW SIDE REACH SHALL BE NO LESS THAN 9 INCHES.
CBC_1118B.6 SIDE REACH.

8. WHEN SIGNS DIRECT OR GIVE INFORMATION (EXIT SIGNAGE) THEY SHALL COMPLY WITH SECTIONS CBC_1117B.5.2, CBC_1117B.5.3 AND CBC_1117B.5.4
CBC_1117B.5.1.2 DIRECTIONAL AND INFORMATIONAL SIGN.

EXITING NOTES:

1. **DOOR HARDWARE:**
EXIT DOORS SHALL BE OPENABLE FROM THE INSIDE WITHOUT THE USE OF A KEY OR ANY SPECIAL KNOWLEDGE OR EFFORT.

2. **EXIT SIGNS:**
THE PATH OF TRAVEL TO & WITHIN EXITS IN A BUILDING SHALL BE IDENTIFIED BY EXIT SIGNS CONFORMING TO THE REQUIREMENTS OF CBC 1011 EXIT SIGNS SHALL BE READILY VISIBLE FROM THE DIRECTION OF APPROACH & LOCATED AS NECESSARY TO INDICATE THE DIRECTION OF EGRESS TRAVEL NO POINT SHALL BE MORE THAN 100 FEET FROM THE NEAREST VISIBLE SIGN. TACTILE EXIT SIGNS SHOULD ALSO BE PROVIDED PER CBC SECTIONS 1011.3

3. **MEANS OF EGRESS ILLUMINATION:**
AT ANY MAE THE BUILDING IS OCCUPIED, THE MEANS OF EGRESS SHALL BE ILLUMINATED AT AN INTENSITY OF NO LESS THAN 1 FT–CANDLE AT FLOOR LEVEL.

4. **ILLUMINATION POWER SUPPLY:**
POWER SUPPLY FOR MEANS OF EGRESS ILLUMINATION SHALL NORMALLY BE PROVIDED BY THE PREMISES' ELECTRICAL SUPPLY. IN THE EVENT OF ITS FAILURE, ILLUMINATION TO BE AUTOMATICALLY PROVIDED FROM AN EMERGENCY SYSTEM WHERE THE EXITING SYSTEM SERVES AN OCCUPANT LOAD OF 100 OR MORE.

5. **AISLES WITHOUT FIXED SEATS:**
AISLES SERVING AS A PORTION OF AN EXIT ACCESS IN THE MEANS OF EGRESS SYSTEM SHALL BE IN ACCORDANCE WITH CDC 1014.4.

6. **ROOM CAPACITY:**
ANY ROOM HAVING AN OCCUPANT LOAD OF 50 OR MORE SHALL HAVE THE CAPACITY OF THE ROOM POSTED IN A CONSPICUOUS PLACE.

7. **ACCESSIBLE PATHS OF TRAVEL:**
EXISTING EXTERIOR PATHS OF TRAVEL FROM PARKING TO MAIN BUILDING ENTRANCES COMPLY WITH CURRENT ACCESSIBILITY REGULATIONS. ALL EXISTING AND NEW INTERIOR PUBLIC AREAS INCLUDING OFFICES, CLASS/CONF ROOMS, BREAK ROOMS AND TOILETS TO COMPLY WITH CURRENT ACCESSIBILITY REGULATIONS.

Revisions:	Date
ISSUE FOR BID	04/17/12
ISSUE FOR 100% REVIEW	02/9/12
ISSUE FOR 95% REVIEW	12/9/11
ISSUE FOR 65% REVIEW	07/7/11
ISSUE FOR 35% REVIEW	03/24/11

CONSULTANTS:

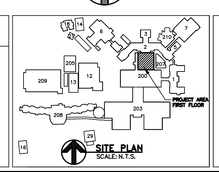

SITE PLAN
SCALE: N.T.S.

LICENSED ARCHITECT JIM D. MORELAN NO. C5471 REN. 12/13 STATE OF CALIFORNIA

STAMP

ARCHITECT/ENGINEERS:

ADVANCE DESIGN CONSULTANTS, INC
PROFESSIONAL ENGINEERS
998 PARK AVENUE SAN JOSE, CA 95126
(408) 297–1881 FAX: (408) 294–3186
WWW.ADCENGINEERS.COM

ATTENTION:
ONLY WET SIGNED DOCUMENTS CONSTITUTE ADVANCE DESIGN CONSULTANTS, INC. PROFESSIONAL WORK AND BECAUSE OTHER REPRODUCIBLE DOCUMENTS MAY BE EASILY ALTERED WITHOUT THE CONSENT OF ADVANCE DESIGN CONSULTANTS, INC., THE WET SIGNED DOCUMENTS MUST BE REFERRED TO FOR ACCURATE AND CURRENT INFORMATION. IF THERE ANY DIFFERENCES BETWEEN THE WET SIGNED DOCUMENTS AND ANY OTHER DOCUMENTS, THE WET SIGNED DOCUMENTS SHALL GOVERN.

ADVANCE DESIGN CONSULTANTS, INC. IS NOT RESPONSIBLE FOR ANY MODIFICATIONS MADE TO OUR DOCUMENTS BY ANYONE OTHER THAN AUTHORIZED REPRESENTATIVES OF ADVANCE DESIGN CONSULTANTS, INC.

Drawing Title: ARCHITECTURAL EXITING PLAN

Approved Project Director:

Project Title: BUILDING 200 DENTAL CLINIC

Location: 4150 CLEMENT ST. SAN FRANCISCO, CA

Date: NOVEMBER 2011 | Checked: L. RIOS | Drawn: J. ROTH

Project Number: 662-11-108

Building Number: 200

Drawing Number: 200-A-30-0.1

Dwg. 03 of 44

Office of Construction and Facilities Management

Department of Veterans Affairs

VA FORM 08-6231

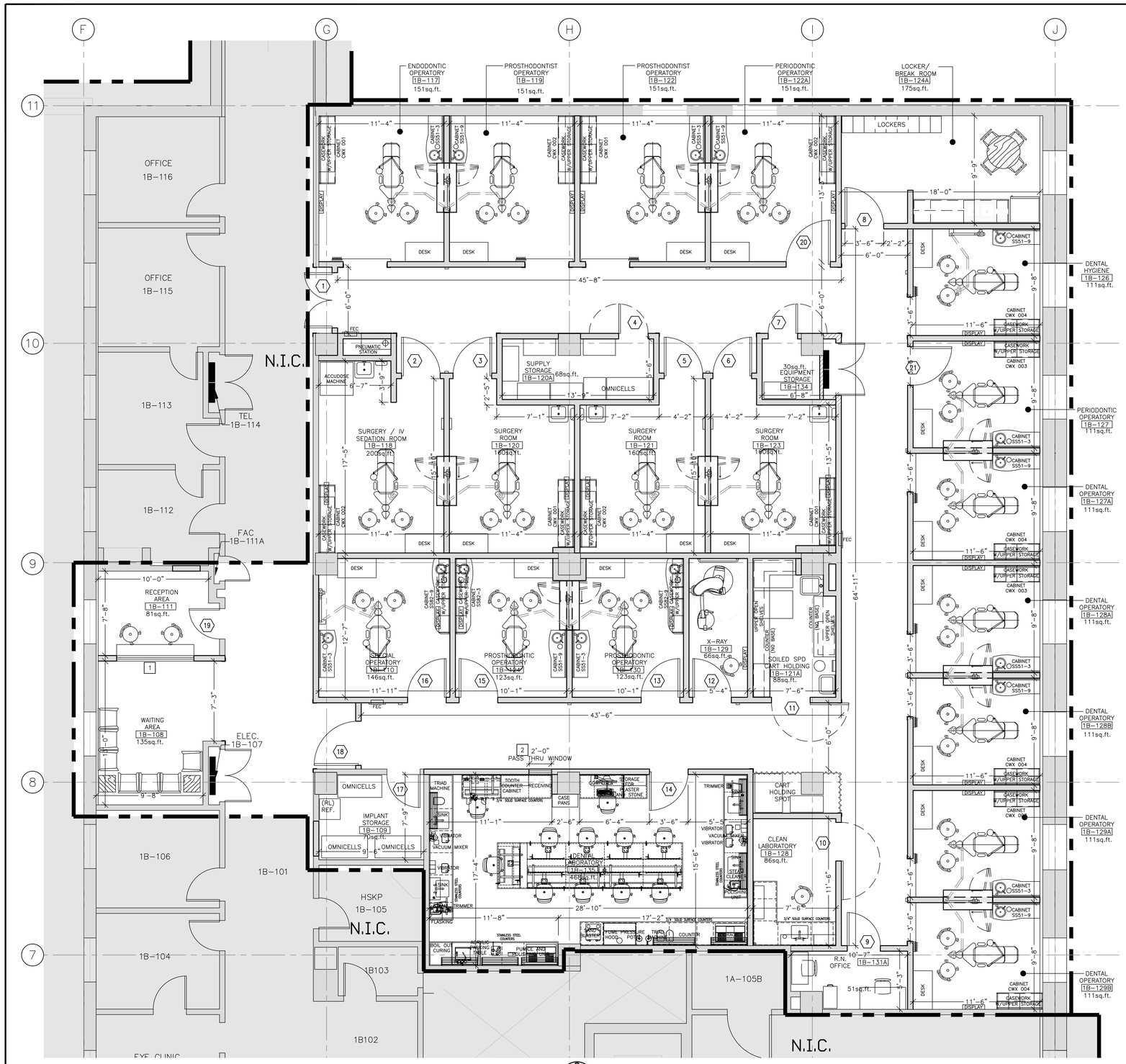

NEW WORK FLOOR PLAN
SCALE: 1/4" = 1'-0"

LEGEND:

- (E) CEILING HEIGHT PARTITION
- (N) CEILING HEIGHT PARTITION
- (N) FULL HEIGHT PARTITION SMOKE WALL
- AREA NOT IN CONTRACT (NIC)
- (N) CURTAIN.
- DOOR NUMBER SEE DOOR SCHEDULE
- WINDOW NUMBER SEE WINDOW SCHEDULE
- FIRE EXTINGUISHER CABINETS

SHEET NOTES:

1. V.A. TO FURNISH AND INSTALL TWO (2) X-RAY INTRAL ORAL UNITS. (N.I.C.)
2. V.A. TO TO FURNISH AND INSTALL ONE (1) A-dec TRACK LIGHT FIXTURES. (N.I.C.)
3. CONTRACTOR TO INSTALL EIGHT (8) X-RAY INTRAL ORAL UNITS PROVIDED BY V.A.
4. CURTAINS TO BE FURNISHED AND INSTALLED BY V.A. (N.I.C.)
5. CURTAIN TRACK SYSTEM SHALL BE FURNISHED AND INSTALLED BY CONTRACTOR.

FURNITURE AND EQUIPMENT INSTALLATION:

A. THE FOLLOWING ITEMS SHALL BE FURNISHED AND INSTALL BY CONTRACTOR:

ALL BUILT IN CASEWORK.
LABORATORY BENCHES.
SINKS AND CABINETS.
BREAK ROOM CABINETS.

B. THE FOLLOWING ITEMS ARE V.A. FURNISHED AND CONTRACTOR INSTALLED:

X-RAY.
DENTAL CHAIRS.
TRACK LIGHTS.
MICROSCOPE.

C. THE FOLLOWING ITEMS ARE V.A. FURNISHED AND V.A. INSTALLED:

COMPUTER DESKS.
PERSONAL CHAIRS.
WAITING AREA CHAIRS.
BREAK ROOM TABLE WITH CHAIRS.
LOCKERS.
OMNICELL STORAGE CABINETS.
REFRIGERATOR.
ACCUDOSE MACHINE.

FLOOR PLAN NOTES:

1. THE CONSTRUCTION PLANS INDICATE THE TYPE AND LOCATION OF NEW INTERIOR PARTITIONS, DOORS, WINDOWS, CABINETWORK, ETC. THE BUILDING SHELL AN EXISTING CONDITION.

2. THE FOLLOWING SHALL BE PROVIDED BY THE GENERAL CONTRACTOR AS DESIGN-BUILD SYSTEMS:
A. AUTOMATIC FIRE SPRINKLER SYSTEM.
B. FIRE ALARM CONNECTIONS.
CONTRACTOR SHALL FULLY COORDINATE THE DESIGN/ENGINEERING PROCESS OF THE ABOVE REFERENCED SYSTEMS AND THE COMPLETE AND PROPERLY FUNCTIONING INSTALLATION THEREOF.

3. THE FOLLOWING SYSTEMS SHALL BE COORDINATED BY THE GENERAL CONTRACTOR WITH EACH OF HIS SUBCONTRACTORS FOR THE SYSTEMS NOTED BELOW TO ENSURE COMPATIBILITY AND PROPER CONNECTION TO EXISTING EQUIPMENT:
A. TELECOMMUNICATIONS
B. SECURITY
COORDINATE LOCATIONS OF OUTLETS FOR VA FURNISHED DENTAL EQUIPMENT WITH ELECTRICAL AND PIPING DRAWING.

4. INSTALL PARTITIONS PARALLEL WITH THE STRUCTURAL GRID OF THE EXISTING BUILDING U.O.N.

5. ALL PARTITIONS, DOORS, GLAZED OPENINGS, SOFFITS, ETC.., SHALL BE STRUCTURALLY BRACED IN ACCORDANCE WITH SEISMIC CODE REQUIREMENTS.

6. COORDINATE LOCATION AND PROVIDE BLOCKING, BACKINGS AND/OR REINFORCEMENT IN PARTITIONS FOR ALL CABINETS, COUNTERTOPS AND ANY WALL-MOUNTED ITEMS. REFER TO THE PLANS, ELEVATIONS AND DETAILS FOR LOCATION OF ITEMS WHICH MAY REQUIRE SUPPORT.

7. ALL PARTITIONS SHALL BE DIMENSIONED FROM FINISH FACE OF FINISH TO FINISH FACE OF FINISH U.O.N.

8. PROVIDE NECESSARY SEMI-RECESSED MOUNTED FIRE EXTINGUISHER CABINETS LOCATED SUCH THAT THE MAXIMUM TRAVEL DISTANCE TO A FIRE EXTINGUISHER SHALL NOT EXCEED 75 FEET. LOCATIONS INDICATED ON THE DRAWINGS SHALL BE VERIFIED WITH THE FIRE MARSHALL AS BEING ACCEPTABLE. SEE LOCATIONS MARKED AS "FEC".

9. ALL FURRED WALLS SHALL EXTEND VERTICALLY THRU THE CEILING WHERE INDICATED ON THE DRAWINGS OR TO THE STRUCTURE ABOVE WHERE NO CEILING OCCURS. U.O.N

10. WHEREVER DIAGONAL BRACING IS INDICATED OR OTHERWISE REQUIRED, INSTALL BRACING UNEXPOSED TO VIEW. PARTICULARLY AT SUSPENDED OR DRYWALL CEILING AREAS. IF EXPOSED TO VIEW CONDITIONS COST IN THE DESIGN, DO NOT BRACE INTO THE AREA WHERE NO CEILING IS TO BE INSTALLED, OR INTO THE "MORE OPEN' AND VISIBLE SIDE OF BULKHEAD/SOFFTT WHERE BOTH SIDES SHALL BE WITHOUT A CEILING.

11. FOR TYPICAL PARTITIONS, AND PARTITION DETAILS REFER TO SHEET A-3.0

12. WHERE NEW PARTITIONS MEET EXISTING MULLIONS OR COLUMNS INSTALL THE NEW PARTITION PERPENDICULAR TO THE EXISTING MULLION OR COLUMN AND ALIGN THE CENTERLINE OF THE NEW PARTITION WITH THE MULLION OR COLUMN U.O.N

13. WHERE A GYPSUM BOARD PARTITION MEETS FLUSH WITH THE FACE OF AN EXISTING PARTITION, REMOVE THE EXISTING METAL CORNER BEAD BEFORE INSTALLING THE NEW PARTITION.

14. ALIGN NEW PARTITION SURFACES WITH THE COSTING ADJACENT OR ADJOINING SURFACES WHERE INDICATED. TAPE AND SAND THE JOINTS TO SMOOTH WITHOUT ANY VISIBLE JOINTS. PATCH AND REPAIR SURFACES TO MATCH ADJACENT OR ADJOINING SURFACES.

15. PATCH EXISTING DAMAGED PARTITIONS THROUGHOUT ENTIRE PROJECT AREA TO MATCH ADJACENT SURFACES.

16. CUT AND FIT COMPONENTS AS REQUIRED TO ALTER COSTING WORK FOR INSTALLATION OF NEW WORK. PATCH DAMAGED AREAS TO MATCH ADJACENT SURFACES.

17. AT OPENINGS IN GYPSUM BOARD WALLS FOR DUCT WORK, RETURN AIR, WRAP HEAD, JAMBS AND SILL OF OPENING WITH GYPSUM BOARD. U.O.N.

18. HOT WATER AND DRAIN PIPES ACCESSIBLE UNDER LAVATORIES SHALL BE INSULATED OR OTHERWISE COVERED.

19. VERTICAL DIMENSIONS ARE FROM TOP OF FLOOR SLAB, EXCEPT WHERE OTHERWISE NOTED TO BE ABOVE FINISH FLOOR.

20. DIMENSION ARE NOT ADJUSTABLE WITHOUT APPROVAL OF THE ARCHITECT UNLESS NOTED +/- OR FIELD VERIFY.

21. THE GENERAL CONTRACTOR SHALL VERIFY THAT NO CONFLICT EXIST IN THE LOCATION OF ANY MECHANICAL, HVAC, TELEPHONE, ELECTRICAL, PLUMBING AND SPRINKLER EQUIPMENT (TO INCLUDE ALL PIPING. DUCTWORK. CONDUIT. CABLES, ETC.) AND THAT ALL REQUIRED CLEARANCES FOR INSTALLATION AND MAINTENANCE OF ABOVE EQUIPMENT ARE PROVIDED. ELEMENTS TO BE EXPOSED TO VIEW SHALL BE REVIEWED WITH THE ARCHITECT AND COORDINATED BY AND BETWEEN THE GENERAL CONTRACTOR AND PERTINENT SUB-CONTRACTORS PRIOR TO CONSTRUCTION OR FABRICATION PROCEEDING.

22. LAY-OUT ALL PARTITIONS BEFORE PROCEEDING. VERIFY PARTITION LAY-OUT WITH ARCHITECT BEFORE FRAMING. IF DISCREPANCIES EXIST BETWEEN FIELD CONDITIONS AND THE DRAWINGS NOTIFY ARCHITECT.

23. THE CONTRACTOR IS RESPONSIBLE FOR VERIFYING THE DIMENSIONS AND ELEVATIONS AT THE SITE. THE CONTRACTOR AND SUB-CONTRACTORS SHALL COORDINATE THE LAYOUT AND EXACT LOCATIONS OF ALL PARTITIONS, DOORS, ELECTRICAL/TELEPHONE OUTLET. LIGHT SWITCHES AND THERMOSTATS WITH THE ARCHITECT IN THE FIELD PRIOR TO PROCEEDING.

24. IN THE EVENT OF CONFLICT BETWEEN DATA SHOWN ON DRAWINGS AND DATA SHOWN ON THE SPECIFICATIONS, THE DRAWINGS SHALL TAKE PRECEDENCE. DETAIL DRAWINGS TAKE PRECEDENCE OVER DRAWING OF SMALLER SCALE. SHOULD THE CONTRACTOR AT ANY TIME DISCOVER AN ERROR IN A DRAWING OR SPECIFICATION OR A DISCREPANCY OR VARIATION BETWEEN DIMENSIONS ON DRAWINGS AND MEASUREMENTS AT THE SITE OR LACK OF DIMENSIONS OR OTHER INFORMATION, THE GENERAL CONTRACTOR SHALL NOT PROCEED WITH THE WORK AFFECTED UNTIL CLARIFICATION HAS BEEN MADE.

25. THE GENERAL CONTRACTOR SHALL COORDINATE AND PROVIDE APPROPRIATE STRUCTURAL BACKING AND REINFORCING IN PARTITIONS BEHIND ALL WALL-MOUNTED. WALL-ANCHORED OR SUPPORTED ITEMS. ALL CONCEALED WOOD USED FOR SUCH SUPPORT SHALL BE ARE RETARDANT TREATED.

26. GENERAL CONTRACTOR TO PROVIDE 2LB LEAD SHIELDING LAYER ON WALLS IN X-RAY ROOM 1B-129.

Revisions:	Date
ISSUE FOR BID	04/17/12
ISSUE FOR 100% REVIEW	02/9/12
ISSUE FOR 95% REVIEW	12/9/11
ISSUE FOR 65% REVIEW	07/7/11
ISSUE FOR 35% REVIEW	03/24/11

VA FORM 08-6231

CONSULTANTS:

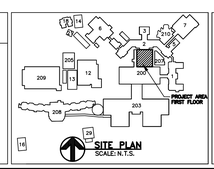

SITE PLAN
SCALE: N.T.S.

LICENSED ARCHITECT JIM D. MORELAN NO. C5471 REN. 12/13 STATE OF CALIFORNIA

STAMP

ARCHITECT/ENGINEERS:

ADVANCE DESIGN CONSULTANTS, INC
PROFESSIONAL ENGINEERS
998 PARK AVENUE SAN JOSE, CA 95126
(408) 297-1881 FAX: (408) 294-3186
WWW.ADCENGINEERS.COM

ATTENTION:
ONLY WET SIGNED DOCUMENTS CONSTITUTE ADVANCE DESIGN CONSULTANTS, INC. PROFESSIONAL WORK AND BECAUSE OTHER REPRODUCIBLE DOCUMENTS MAY BE EASILY ALTERED WITHOUT THE CONSENT OF ADVANCE DESIGN CONSULTANTS, INC., THE WET SIGNED DOCUMENTS MUST BE REFERRED TO FOR THE ORIGINAL AND CORRECT INFORMATION. IF THERE ANY DIFFERENCES BETWEEN THE WET SIGNED DOCUMENTS AND ANY OTHER DOCUMENTS, THE WET SIGNED DOCUMENTS SHALL GOVERN.

ADVANCE DESIGN CONSULTANTS, INC. IS NOT RESPONSIBLE FOR ANY MODIFICATIONS MADE TO OUR DOCUMENTS BY ANYONE OTHER THAN AUTHORIZED REPRESENTATIVES OF ADVANCE DESIGN CONSULTANTS, INC.

Drawing Title: ARCHITECTURAL NEW WORK FLOOR PLAN

Approved Project Director:

Project Title: BUILDING 200 DENTAL CLINIC

Project Number: 662-11-108

Building Number: 200

Location: 4150 CLEMENT ST. SAN FRANCISCO, CA

Date: NOVEMBER 2011 | Checked: L. RIOS | Drawn: R. RIOS

Drawing Number: 200-A-30-1.0

Dwg. 04 of 44

Office of Construction and Facilities Management

Department of Veterans Affairs

NEW REFLECTED CEILING PLAN
SCALE: 1/4" = 1'–0"

REFLECTED CEILING PLAN NOTES:

1. GENERAL CEILING HEIGHT 8'–6" ABOVE FINISH FLOOR.

2. REFER TO ELECTRICAL ENGINEERING DRAWINGS FOR THE FOLLOWING:
A. CIRCUITING MID WIRING OF LIGHT FIXTURES AND SWITCHES.
B. LIFE/SAFETY EQUIPMENT AND/OR FIXTURES.
C. LOCATION OF EMERGENCY LIGHTING.
D. LOCATION OF EXIT SIGNS.
E. LIGHT FIXTURE TYPES AND SPECIFICATIONS.
F. SWITCH LOCATIONS AND TYPE.

3. REFER TO MECHANICAL ENGINEERING DRAWINGS FOR THE FOLLOWING:
A. DUCTS, CFM, SIZE OF GRILLES AND REGISTERS.
B. THERMOSTAT LOCATIONS.
C. EXHAUST FANS, AIR SUPPLY, ROOF TOP MECHANICAL EQUIPMENT, OTHER MECHANICAL EQUIPMENT.

4. FIRE PROTECTION WILL BE DESIGN–BUILD PER V.A. SPECIFICATIONS INCLUDING THE FOLLOWING:
A. LAYOUT, LOCATION AND SIZE OF SPRINKLER LINES AND HEADS.
B. PRESSURE REQUIREMENTS
C. SPRINKLER HEAD SELECTION.

5. THE FOLLOWING DRAWINGS SHALL BE REVIEWED BY THE GENERAL CONTRACTOR TO ENSURE TRADE FOR COORDINATION PRIOR TO ORDER OR FABRICATION OF MATERIALS AND/OR INSTALLATION:
A. MECHANICAL
B. SPRINKLER
C. ELECTRICAL
D. PLUMBING

6. THE CONTRACTOR SHALL COORDINATE WITH WORK OF ALL TRADES TO MAINTAIN SCHEDULED CEILING HEIGHTS AND REQUIRED CLEARANCES FOR ALL FIXTURES, DUCTS, SUSPENSION SYSTEMS, PIPING, ETC.

7. COORDINATE LOCATION OF ANY AND ALL MECHANICAL, ELECTRICAL, TELEPHONE, LIGHTING, PLUMBING & SPRINKLER EQUIPMENT, INCLUDING ALL PIPING, DUCTWORK AND CONDUITS.

8. LIGHT SWITCH COVER PLATES, AS WELL AS OTHER DEVICES SHALL BE WHITE U.O.N.

9. SPRINKLER HEADS, LIGHT FIXTURES AND OTHER CEILING ELEMENTS SHALL BE LOCATED IN CENTER OF INDIVIDUAL TILE, 1/2 TILE OR CEILING TILE GRID (WHEN ITEM IS LARGER THAN A SINGLE TILE) U.O.N. CEILING FIXTURE AND ELEMENT LOCATIONS THAT CONFLICT WITH CEILING GRID LOCATIONS SHALL BE BROUGHT TO THE ARCHITECTS ATTENTION.

10. PROVIDE BLOCKING AND/OR BACKING AND REINFORCEMENT ABOVE CEILING FOR SUPPORT OF LIGHT FIXTURES, PROJECTION SCREENS AND ANY OTHER CEILING MOUNTED ITEM.

11. WHERE START OF CEILING TILE GRID IS NOT OTHERWISE INDICATED, GRID SHALL BE LOCATED SO THAT A FULL TILE IS CENTERED IN BOTH DIRECTIONS WITHIN THE ROOM OR SPACE.

12. ALL CEILING GRIDS AND SUSPENSION SYSTEMS SHALL INCLUDE ANY AND ALL SEISMIC BRACING, COMPRESSION STRUTS AND SAFETY REINFORCEMENT CONSISTENT WITH LOCAL, STATE AND FEDERAL STANDARDS.

13. ANY AND ALL FIRE PROTECTION SYSTEMS INCLUDING SPRINKLERS AND SMOKE DETECTORS SHALL BE PROVIDED TO MEET REQUIRED COVERAGE, INCLUDING CONDITIONS WHICH SUGGEST OR DEFINE MULTIPLE PLENUM LEVELS. THIS WOULD INCLUDE CEILINGS OR SUB–CEILING AREAS OR OTHER CAVITIES.

15. CONTRACTOR SHALL PROVIDE FOR ALL CEILING GRID REVISIONS CAUSED BY RELOCATING FIXTURES OWING TO LIGHT FIXTURE CONFLICTS.

16. FINISHED CEILING SHALL BE LEVEL WITHIN 1/8 INCH IN 12 FEET.

17. SWITCHES TO CONTROL LIGHTS IN ROOMS WHERE LOCATED U.O.N.

18. WHERE MORE THAN ONE SWITCH IS REQUIRED, GANG SWITCHES WITH ONE COVERPLATE.

19. EQUIPMENT INCLUDING EXAMINATION TRACK LIGHTS.

20. EXISTING HALLWAY 1B–101 CEILING HEIGHT AND CEILING TILES WITH LIGHT FIXTURES TO REMAIN EXISTING.

21. FIRE SPRINKLER LOCATION ARE PROVIDED FOR CEILING COORDINATION PURPOSES ONLY. CONTRACTOR SHALL ENSURE SPRINKLER COVERAGE PER CODE.

22. COORDINATE WITH ELECTRICAL CONTRACTOR LOCATION OF EXIT SIGNS.

LEGENDS:

- (N) 2'x2' ACOUSTICAL CEILING WITH SUSPENSION SYSTEM AND SUPPORTS. CENTER TO THE ROOM IN BOTH DIRECTIONS.
- (N) 2'x4' RECESSED LIGHT FIXTURE (SEE ELECTRICAL DWG'S)
- (N) 2'x2' RECESSED LIGHT FIXTURE (SEE ELECTRICAL DWG'S)
- (N) RETURN DIFFUSER (SEE MECHANICAL DWG'S)
- (N) SUPPLY DIFFUSER (SEE MECHANICAL DWG'S)
- (N) EXHAUST DIFFUSER (SEE MECHANICAL DWG'S)
- FIRE SPRINKLER HEAD
- EXITING LIGHTING

Revisions:	Date
ISSUE FOR BID	04/17/12
ISSUE FOR 100% REVIEW	02/9/12
ISSUE FOR 95% REVIEW	12/9/11
ISSUE FOR 65% REVIEW	07/7/11
ISSUE FOR 35% REVIEW	03/24/11

CONSULTANTS:

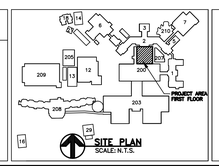

SITE PLAN
SCALE: N.T.S.

LICENSED ARCHITECT JIM D. MORELAND NO. C5471 REN. 12/13 STATE OF CALIFORNIA
STAMP

ARCHITECT/ENGINEERS:
ADVANCE DESIGN CONSULTANTS, INC
PROFESSIONAL ENGINEERS
998 PARK AVENUE SAN JOSE, CA 95126
(408) 297–1881 FAX: (408) 294–3186
WWW.ADCENGINEERS.COM

ATTENTION:
ONLY WET SIGNED DOCUMENTS CONSTITUTE ADVANCE DESIGN CONSULTANTS, INC. PROFESSIONAL WORK AND BECAUSE OTHER REPRODUCIBLE DOCUMENTS MAY BE EASILY ALTERED WITHOUT THE CONSENT OF ADVANCE DESIGN CONSULTANTS, INC., THE WET SIGNED DOCUMENTS MUST BE REFERRED TO FOR THE ORIGINAL AND CORRECT INFORMATION. IF THERE ANY DIFFERENCES BETWEEN THE WET SIGNED DOCUMENTS AND ANY OTHER DOCUMENTS, THE WET SIGNED DOCUMENTS SHALL GOVERN.
ADVANCE DESIGN CONSULTANTS, INC. IS NOT RESPONSIBLE FOR ANY MODIFICATIONS MADE TO OUR DOCUMENTS BY ANYONE OTHER THAN AUTHORIZED REPRESENTATIVES OF ADVANCE DESIGN CONSULTANTS, INC.

Drawing Title: ARCHITECTURAL NEW REFLECTED CEILING PLAN
Approved Project Director:
Project Title: BUILDING 200 DENTAL CLINIC
Location: 4150 CLEMENT ST. SAN FRANCISCO, CA
Date: NOVEMBER 2011 | Checked: L. RIOS | Drawn: R. RIOS
Project Number: 662–11–108
Building Number: 200
Drawing Number: 200–A–30–1.1
Dwg. 05 of 44

Office of Construction and Facilities Management
Department of Veterans Affairs

VA FORM 08–6231

FINISH FLOOR PLAN
SCALE: 1/4" = 1'-0"

LEGEND:

- DOOR NUMBER
- FLOORING NUMBER
- PAINT OR WALL COVERING NUMBER
- SPECIAL FINISH (WALL FEATURE)
- PLASTIC LAMINATE OR SOLID SURFACE NUMBER
- FABRIC PRIVACY PANEL NUMBER

GENERAL NOTES:

A. ALL WALLS TO BE P-1 (U.O.N.)

B. ALL BASE TO BE B-1 (U.O.N.)

C. ALL WALLS TO HAVE A SMOOTH FINISH, LEVEL 4 PRIOR TO APPLICATION OF PAINT.

D. SHOP PAINT DOORS P-1 W/ SEMI-GLOSS LATEX ENAMEL FINISH.

E. PAINT ALL DOOR FRAMES TO MATCH P-1 PAINT W/ SEMI-GLOSS LATEX ENAMEL FINISH.

D. PROVIDE CORNER GUARDS AT ALL EXPOSED WALL ENDS.

SHEET NOTES:

1. INTEGRAL RESILIENT FLOORING COVE BASE W/ SS SCHLUTER STRIP.
2. (E) FLOOR FINISH TO REMAIN.
3. ROLLER MECHO SHADE, COLOR TBD.
4. CORNER GUARDS 4 FEET HEIGHT x 4 INCH STAINLESS STEEL CORNER GUARD, 16 GAUGE THICKNESS, MANUFACTURED BY DiamondLife.

INTERIOR FINISH SCHEDULE

ITEM	MANUFACTURER	COLOR/ PRODUCT NUMBER	FINISH/ STYLE/ SIZE	CONTACT
PAINT/ WALL				
P-1	Kelly Moore	Champagne Mist OW211-1	Eggshell	
P-2	MDC	CP3235	Ceramic Coating	Kate Sage 408.825.3750
P-3	MDC	CP3215	Ceramic Coating	Kate Sage 408.825.3750
P-4	MDC	CP3302	Ceramic Coating	Kate Sage 408.825.3750
P-5	MDC	CP3313	Ceramic Coating	Kate Sage 408.825.3750
P-6	Dunn Edwards	Midday Sun DE5289	Eggshell	
B-1	Johnsonite	Sterling Silver 69	4 3/8" Tightlock Cove Base Resilient	Laurie Malmgren 510.251.1490
B-2	Johnsonite	Iguana 151	4 3/8" Tightlock Cove Base Resilient	Laurie Malmgren 510.251.1490
B-3		Stainless Steel	4" Base	
WC-1	Arc-Com Fabrics	Juncture ACW-51541/ Soapstone #1		Carole Hawkes 415.861.8600
Counter Tops				
SS-1	Ice Stone	Snow Flurry	1.25" thick	Charlie Rose 415.250.5173
STS-1 (Alt. to Lab Counter Material)	Lab Counter Material	Stainless Steel		
Plastic Laminate				
PL-1	Nevamar	Clear Maple WM83400T		Nancy Garman 650.207.735
Flooring				
RSF-1	Forbo Fresco Marmoleum	Barbados 3858	Top Shield	Peggy Spiers 408.603.9309
RSF-2	Forbo Fresco Marmoleum	Silver Shadow 3860	Top Shield	Peggy Spiers 408.603.9309
RSF-3	Forbo Piano Marmoleum	Warm Grey 3601	Top Shield	Peggy Spiers 408.603.9309
RSF-4	Expanko	XCR4 Cork-Rubber Flooring/ Desert Sand XCR41026	12x12" tile	
Fabric				
FPP-1	Carnegie	Foundation 4360/ 32	BioAM with Nano-TexTM	Heather Williamson 408.646.4414
F-1	Carnegie	Xorel Meteor 6427/ 712	X Protect Backing	Heather Williamson 408.646.4414
Special Finish				
SP-1	3Form	Surf + Fizz + Surf	renewable patent, 3/4" thick	Debra Williges 415.710.9440
Pelton & Crane Cabinets				
Solid Surface	Wilsonart Gibraltar	Frosty White - 1573SL		
Plastic Laminate	Nevamar	Silver Alu Metalx MXT003T		
Ceiling Tile				
General Tile	USG		Mars Healthcare ClimaPlus	Lauri VanWert 707.315.4574
Surgery Rooms & Lab	USG		Sheetrock Lay-In Ceiling Panel Clima Plus, PVC-Free	Lauri VanWert 707.315.4574
Light Fixture				
Exam Rooms, Surgery Rooms and Lab Fixture	Finelite	HPR-F-2X4-DCO-1T8-27-SC-C1-IS.88-0B0	High Performance Recessed (HPR) 2x4	
Waiting Area Wall Feature Lamp	Lightolier	Lighting Systems PTS8-1	4'-0" Cove Light	

Revisions:	Date
ISSUE FOR BID	04/17/12
ISSUE FOR 100% REVIEW	02/9/12
ISSUE FOR 95% REVIEW	12/9/11
ISSUE FOR 65% REVIEW	07/7/11
ISSUE FOR 35% REVIEW	03/24/11

CONSULTANTS:

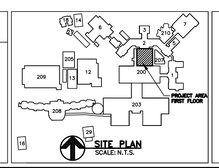

SITE PLAN
SCALE: N.T.S.

STAMP

ARCHITECT/ENGINEERS:

ADVANCE DESIGN CONSULTANTS, INC
PROFESSIONAL ENGINEERS
998 PARK AVENUE SAN JOSE, CA 95126
(408) 297-1881 FAX: (408) 294-3186
WWW.ADCENGINEERS.COM

ATTENTION:
ONLY WET SIGNED DOCUMENTS CONSTITUTE ADVANCE DESIGN CONSULTANTS, INC. PROFESSIONAL WORK AND BECAUSE OTHER REPRODUCIBLE DOCUMENTS MAY BE EASILY ALTERED WITHOUT THE CONSENT OF ADVANCE DESIGN CONSULTANTS, INC., THE WET SIGNED DOCUMENTS MUST BE REFERRED TO FOR THE ORIGINAL AND CORRECT INFORMATION. IF THERE ANY DIFFERENCES BETWEEN THE WET SIGNED DOCUMENTS AND ANY OTHER DOCUMENTS, THE WET SIGNED DOCUMENTS SHALL GOVERN.

ADVANCE DESIGN CONSULTANTS, INC. IS NOT RESPONSIBLE FOR ANY MODIFICATIONS MADE TO OUR DOCUMENTS BY ANYONE OTHER THAN AUTHORIZED REPRESENTATIVES OF ADVANCE DESIGN CONSULTANTS, INC.

Drawing Title: ARCHITECTURAL FINISH PLAN + FINISH SCHEDULE AND NOTES

Approved Project Director:

Project Title: BUILDING 200 DENTAL CLINIC

Location: 4150 CLEMENT ST. SAN FRANCISCO, CA

Date: NOVEMBER 2011 | Checked: J. MORELAN | Drawn: R. RIOS

Project Number: 662-11-108

Building Number: 200

Drawing Number: 200-A-30-2.0

Dwg. 06 of 44

Office of Construction and Facilities Management

Department of Veterans Affairs

VA FORM 08-6231

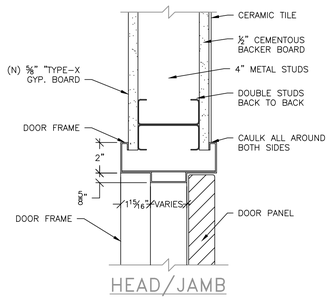

1 A-3.0 A-1.0 **DOOR FRAME**
SCALE: 3" = 1'-0"

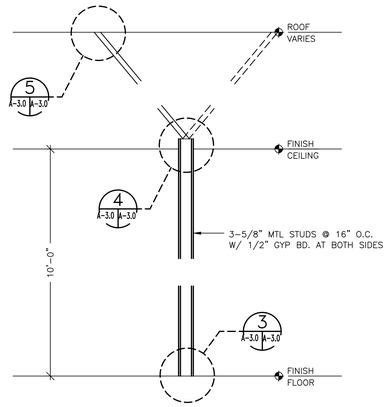

2 A-3.0 A-1.0 **INTERIOR PARTITION**
SCALE: N.T.S.

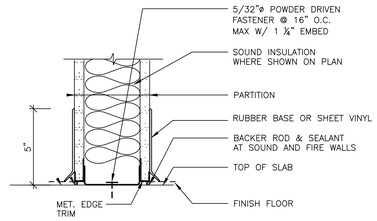

3 A-3.0 A-1.0 **WALL BASE DETAIL**
SCALE: 3" = 1'-0"

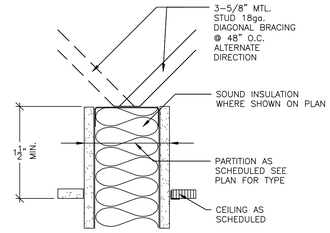

4 A-3.0 A-1.0 **WALL HEAD DETAIL**
SCALE: 3" = 1'-0"

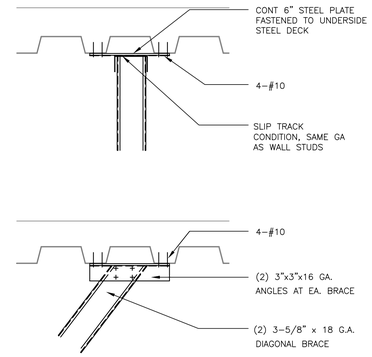

5 A-3.0 A-1.0 **WALL BRACE AT METAL DECK**
SCALE: 3" = 1'-0"

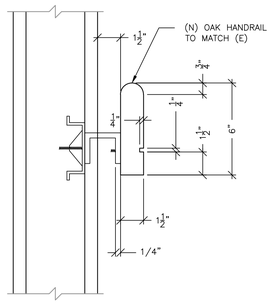

6 A-3.0 A-1.0 **HANDRAIL SECTION**
SCALE: 3" = 1'-0"

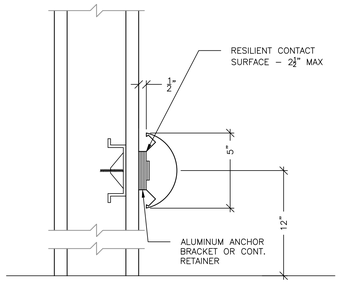

7 A-3.0 A-1.0 **BUMPER GUARD SECTION**
SCALE: 3" = 1'-0"

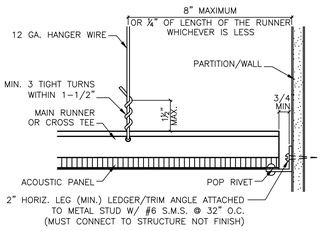

8 - - **FIXED END – SUSPENDED CLG**
SCALE: N.T.S.

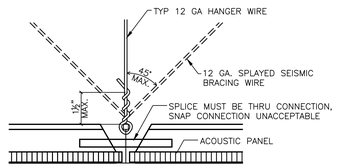

9 - - **SUSPENDED CLG TILE**
SCALE: N.T.S.

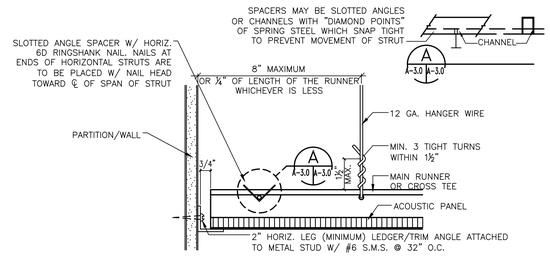

10 - - **SLIP EDGE – SUSPENDED CLG**
SCALE: N.T.S.

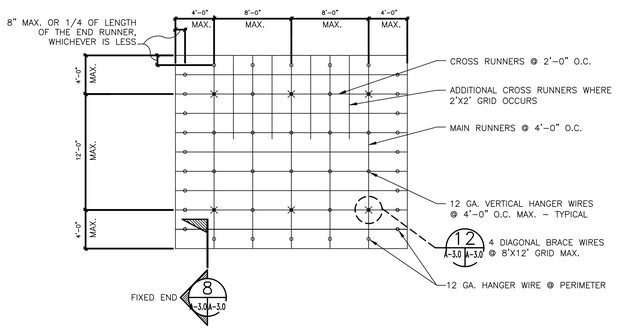

11 - - **SUSPENDED CLG. DIAGRAMATIC PLAN**
SCALE: N.T.S.

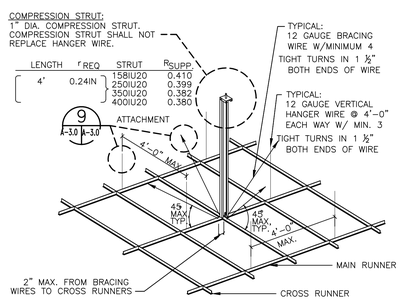

12 - - **SUSP. CLG. BRACING**
SCALE: N.T.S.

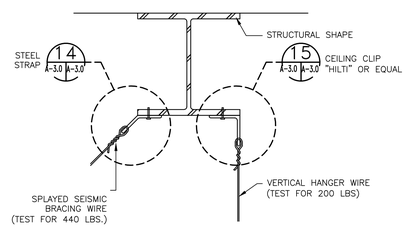

13 - - **CLG HEIGHT WALL HEAD**
SCALE: N.T.S.

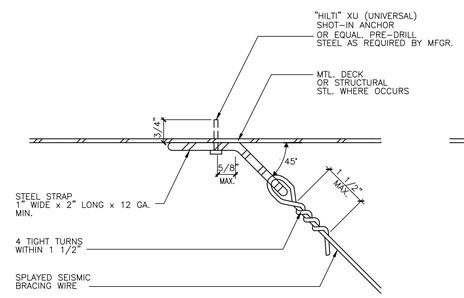

14 - - **SPLAYED SEISMIC BRACING WIRE ATTACHMENT**
SCALE: N.T.S.

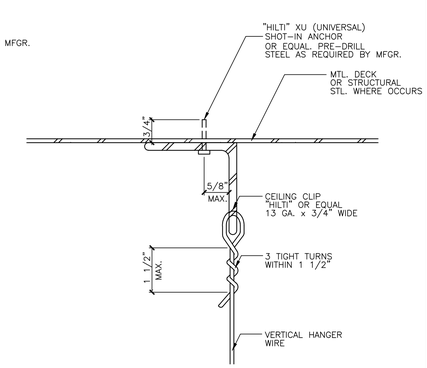

15 - - **VERTICAL SEISMIC HANGER WIRE ATTACHMENT**
SCALE: N.T.S.

Revisions:	Date
ISSUE FOR BID	04/17/12
ISSUE FOR 100% REVIEW	02/9/12
ISSUE FOR 95% REVIEW	12/9/11
ISSUE FOR 65% REVIEW	07/7/11
ISSUE FOR 35% REVIEW	03/24/11

CONSULTANTS:

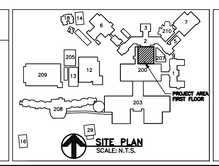

SITE PLAN
SCALE: N.T.S.

LICENSED ARCHITECT JIM D. MORELAN NO. C5471 REN. 12/13 STATE OF CALIFORNIA
STAMP

ARCHITECT/ENGINEERS:

ADVANCE DESIGN CONSULTANTS, INC
PROFESSIONAL ENGINEERS
998 PARK AVENUE SAN JOSE, CA 95126
(408) 297-1881 FAX: (408) 294-3186
WWW.ADCENGINEERS.COM

ATTENTION:
ONLY WET SIGNED DOCUMENTS CONSTITUTE ADVANCE DESIGN CONSULTANTS, INC. PROFESSIONAL WORK AND BECAUSE OTHER REPRODUCIBLE DOCUMENTS MAY BE EASILY ALTERED WITHOUT THE CONSENT OF ADVANCE DESIGN CONSULTANTS, INC., THE WET SIGNED DOCUMENTS MUST BE REFERRED TO FOR THE ORIGINAL AND CORRECT INFORMATION. IF THERE ANY DIFFERENCES BETWEEN THE WET SIGNED DOCUMENTS AND ANY OTHER DOCUMENTS, THE WET SIGNED DOCUMENTS SHALL GOVERN.

ADVANCE DESIGN CONSULTANTS, INC. IS NOT RESPONSIBLE FOR ANY MODIFICATIONS MADE TO OUR DOCUMENTS BY ANYONE OTHER THAN AUTHORIZED REPRESENTATIVES OF ADVANCE DESIGN CONSULTANTS, INC.

Drawing Title: ARCHITECTURAL CONSTRUCTION DETAILS

Approved Project Director:

Project Title: BUILDING 200 DENTAL CLINIC

Location: 4150 CLEMENT ST. SAN FRANCISCO, CA

Date: NOVEMBER 2011 | Checked: J. MORELAN | Drawn: R. RIOS

Project Number: 662-11-108

Building Number: 200

Drawing Number: 200-A-30-3.0
Dwg. 07 of 44

Office of Construction and Facilities Management
Department of Veterans Affairs

VA FORM 08-6231

NUMBER	DOOR SIZE	TYPE	MATERIAL	GLAZING	FRAME MATERIAL	FIRE RATING	HDWR GROUP	GASKETING	
1	5'-0" X 7'-0"	C	WD	–	HM	–	11	AS	KABA Simplex 5000 (Model no. 5021BWL26D41)
2	3'-6" X 7'-0"	A	WD	–	HM	–	1	AS	
3	3'-6" X 7'-0"	A	WD	–	HM	–	1	AS	
4	2'-8" X 7'-0"	A	WD	–	HM	–	4	AS	KABA Simplex 5000 (Model no. 5021BWL26D41)
5	3'-6" X 7'-0"	A	WD	–	HM	–	1	AS	
6	3'-6" X 7'-0"	A	WD	–	HM	–	1	AS	
7	2'-8" X 7'-0"	A	WD	–	HM	–	2	AS	
8	3'-6" X 7'-0"	A	WD	–	HM	–	3	AS	KABA Simplex 5000 (Model no. 5021BWL26D41)
9	3'-0" X 7'-0"	A	WD	–	HM	–	5	AS	
10	3'-6" X 7'-0"	B	WD	–	HM	–	2	AS	
11	3'-6" X 7'-0"	A	WD	–	HM	–	6	AS	
12	3'-6" X 7'-0"	B	WD	–	HM	–	1	AS	
13	3'-6" X 7'-0"	B	WD	–	HM	–	1	AS	
14	3'-6" X 7'-0"	B	WD	–	HM	–	7	AS	
15	3'-6" X 7'-0"	B	WD	–	HM	–	1	AS	
16	3'-6" X 7'-0"	B	WD	–	HM	–	8	AS	
17	3'-0" X 7'-0"	A	WD	–	HM	–	3	AS	KABA Simplex 5000 (Model no. 5021BWL26D41)
18	4'-0" X 7'-0"	A	WD	–	HM	–	9	AS	KABA Simplex 5000 (Model no. 5021BWL26D41)
19	3'-0" X 7'-0"	A	WD	–	HM	–	10	AS	
20	4'-0" X 7'-0"	A	WD	–	HM	–	1	AS	
21	3'-6" X 7'-0"	B	WD	–	HM	–	1	AS	
22	5'-0" X 7'-0"	C	WD	–	HM	.45	12	AS	

A
A-3.1 A-1.0
DOOR SCHEDULE
SCALE: N.T.S.

ABBREVIATIONS:

AL = ALUMINUM
AS = AIR SEAL GASKETING
FS = FIRE/SMOKE SEAL
G = TEMPERED GLASS
L = LAMINATED/TEMPERED GLASS
WD = WOOD

HARDWARE GROUP:

HW #1:
WALL DOOR STOP.
PASSAGE LOCK SET. (ANSI F75)
10" STAINLESS KICK PLATE.
HINGES AS REQUIRED.

HW #2:
WALL DOOR STOP.
PASSAGE LOCK SET. (ANSI F75)
10" STAINLESS KICK PLATE.
HINGES W/ 180° SWING.

HW #3:
WALL DOOR STOP.
KABA LOCK SET.
10" STAINLESS KICK PLATE.
HINGES AS NEEDED.
DOOR CLOSER.

HW #4:
WALL DOOR STOP.
KABA LOCK SET.
10" STAINLESS KICK PLATE.
HINGES W/ 180° SWING.

HW #5:
FLOOR DOOR STOP.
OFFICE LOCK SET. (ANSI F81)
10" STAINLESS KICK PLATE.
HINGES AS REQUIRED.

HW #6:
FLOOR DOOR STOP.
PASSAGE LOCK SET. (ANSI F75)
10" STAINLESS KICK PLATE.
HINGES W/ 180° SWING.

HW #7:
FLOOR DOOR STOP.
PASSAGE LOCK SET. (ANSI F75)
10" STAINLESS KICK PLATE.
HINGES AS REQUIRED.

HW #8:
WALL DOOR STOP.
PASSAGE LOCK SET. (ANSI F75)
STAINLESS ARMOR PLATE (FOR GURNEY).
HINGES AS REQUIRED.

HW #9:
WALL DOOR STOP.
KABA LOCK SET.
10" STAINLESS KICK PLATE.
CONTINUOUS HINGES.
PANIC EXIT HARDWARE.

HW #10:
WALL DOOR STOP.
OFFICE LOCK SET. (ANSI F81)
10" STAINLESS KICK PLATE.
HINGES AS NEEDED.
DOOR CLOSER.

HW #11:
BOTH LEAF INACTIVE.
FLOOR DOOR STOPS.
KABA LOCK SET.
10" STAINLESS KICK PLATE.
CONTINUOUS HINGES.
PANIC EXIT HARDWARE.(BOTH LEAF)

HW #12:
KEY RETRACT – ALWAYS LOCKED
KEYED ENTRY (STORE LOCK)
FLUSH BOLT TOP AND BOTTOM
NO CLOSER
NO KICK PLATE

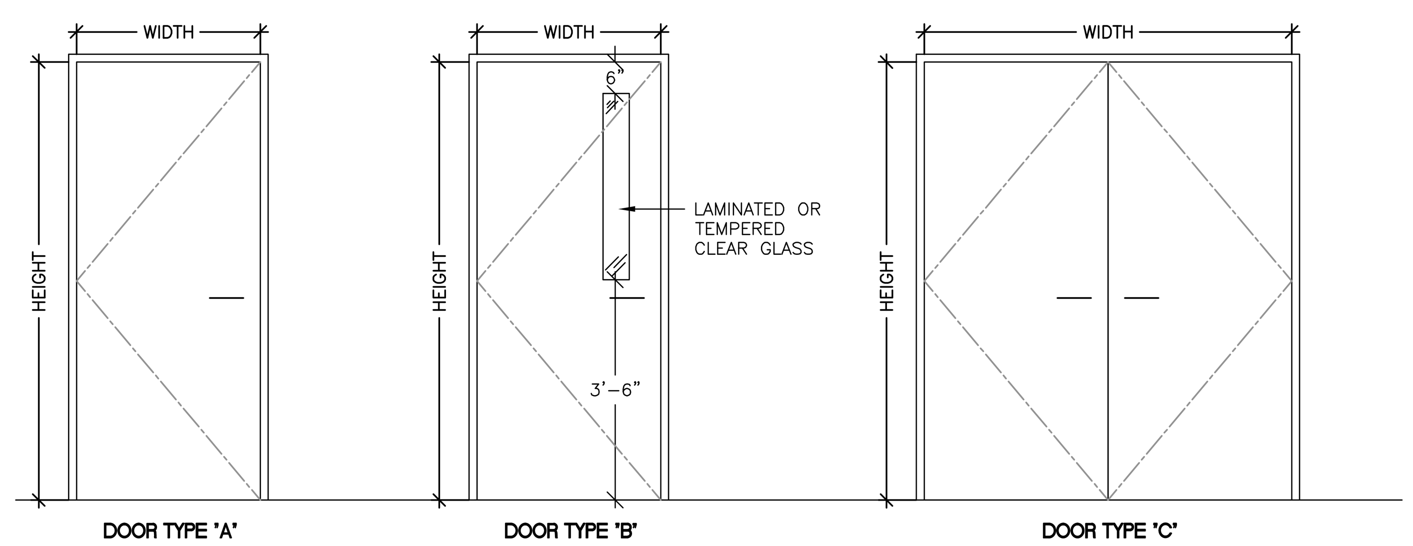

B
A-3.1 A-1.0
DOOR TYPES
SCALE: N.T.S.

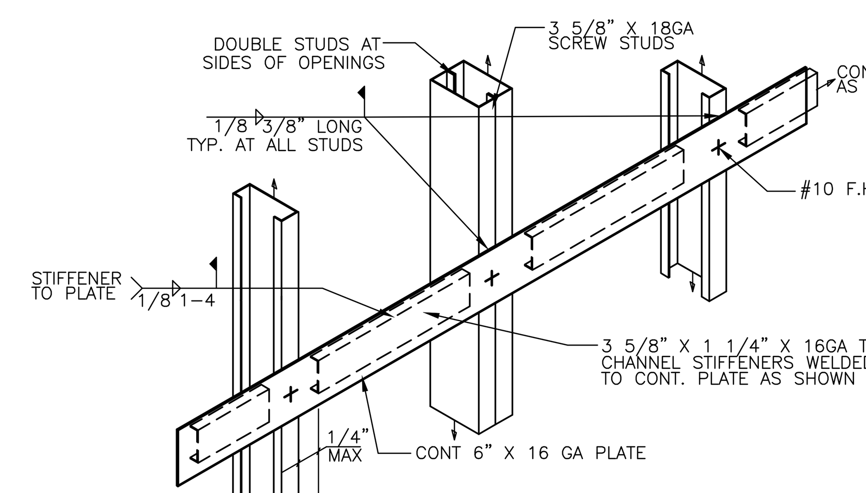

CONNECTION DETAIL

NOTES:

1. TYPE 'C' BACKING PLATE FOR ALL UPPER WALL CABINETS–OVER 2 SHELVES–WALL MOUNTED EQUIPMENT UP TO 200 POUNDS PER FOOT.
2. USE # 12 SELF TAPPING SHEET METAL SCREWS WHEN ATTACHING ITEMS TO BACKING PLATE.
3. WALL STUD FLANGES ARE CONTINUOUS.
4. WALL MOUNTED GREATER THAN 100 LBS., NO OPENINGS ABOVE.
5. FLOOR MOUNTED UNITS GREATER THAN 400LBS., NO OPENINGS ABOVE.

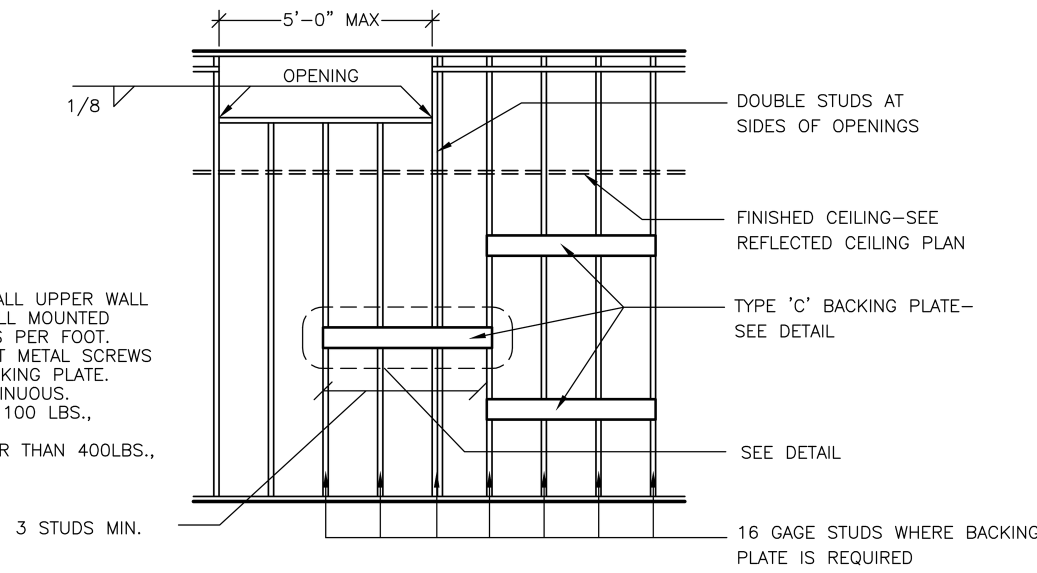

16
A-3.1 A-1.0
TYPE "C" BACKING PLATE DETAIL
SCALE: 1" = 1'-0"

WINDOW NO.	WINDOW TYPE	WINDOW WIDTH	WINDOW HEIGHT	GLASS	FRAME MATERIAL	FRAME FINISH	REMARKS
1	A	7'-0"	3'-0"	LOW 'E' INSULATED	H.M.	POWDER COATED	INSTALL COUNTER SHUTTER **INSIDE RECEPTION AREA 1B-111.** MANUAL PUSH UP OPERATED, FACE OF WALL MOUNTED. **SEE DETAIL 23**
2	B	2'-0"	3'-1"	LOW 'E' INSULATED	H.M.	POWDER COATED	NISSEN & CO. SERIES "D" WINDOW. VERTICAL SLIDING SERVING WINDOW.

WINDOW TYPE

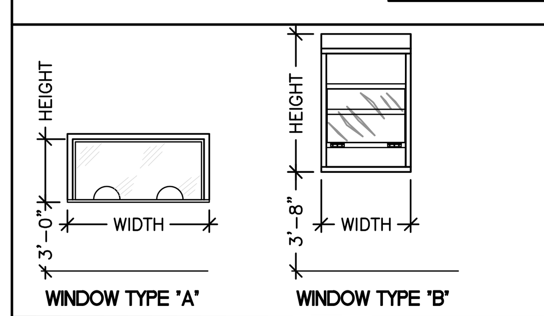

C
A-3.1 A-1.0
WINDOW SCHEDULE
SCALE: N.T.S.

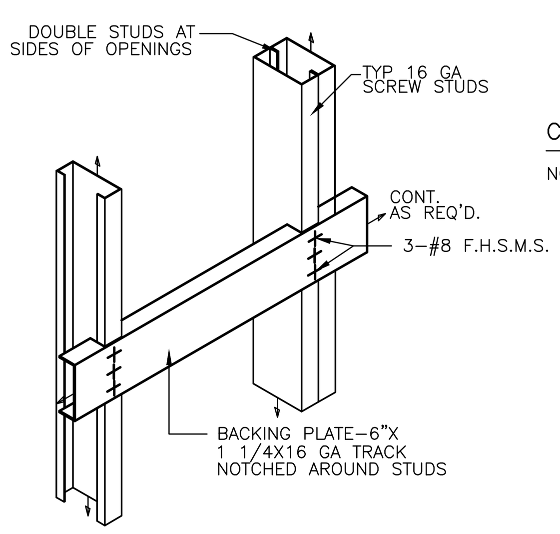

CONNECTION DETAIL

NOTES:

1. TYPE 'A' BACKING PLATE FOR MISC. ITEMS I.E. SURFACE MOUNTED MIRRORS, WASTE RECEPTACLES, TOWEL DISPENSERS, ETC.EMS
2. VERIFY LENGTH, HEIGHT, LOCATION OF BACKING PLATE AND NUMBER REQUIRED WITH ACCESSORY MANUFACTURERS.
3. USE # 12 SELF TAPPING SHEET METAL SCREWS WHEN ATTACHING ITEMS TO BACKING PLATE.
4. WALL STUD FLANGES ARE CONTINUOUS.
5. AT CONTRACTORS OPTION USE METAL LITE, INC. STEEL STUD BACKING R–0192 AS MANUFACTURED BY METAL LITE, INC. RANCHO DOMINGUES, CA.
6. WALL MOUNTED GREATER THAN 100 LBS., NO OPENINGS ABOVE.
7. FLOOR MOUNTED UNITS GREATER THAN 400LBS., NO OPENINGS ABOVE.

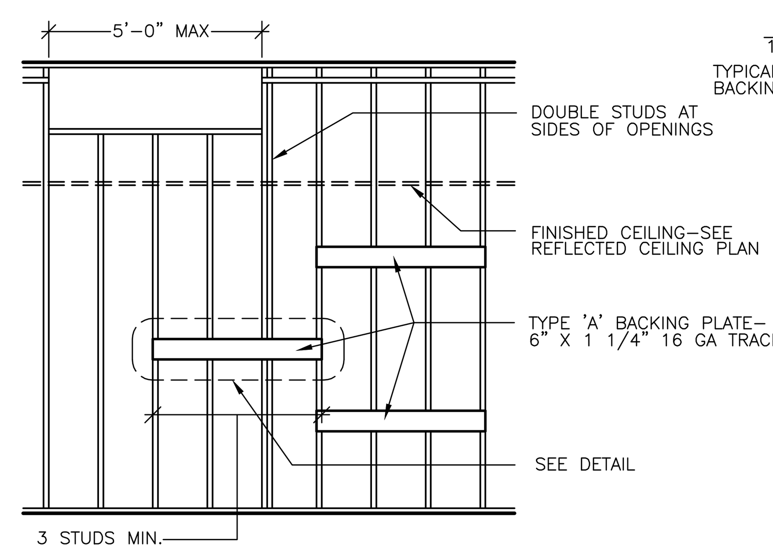

17
A-3.1 A-1.0
TYPE "A" BACKING PLATE DETAIL
SCALE: 1" = 1'-0"

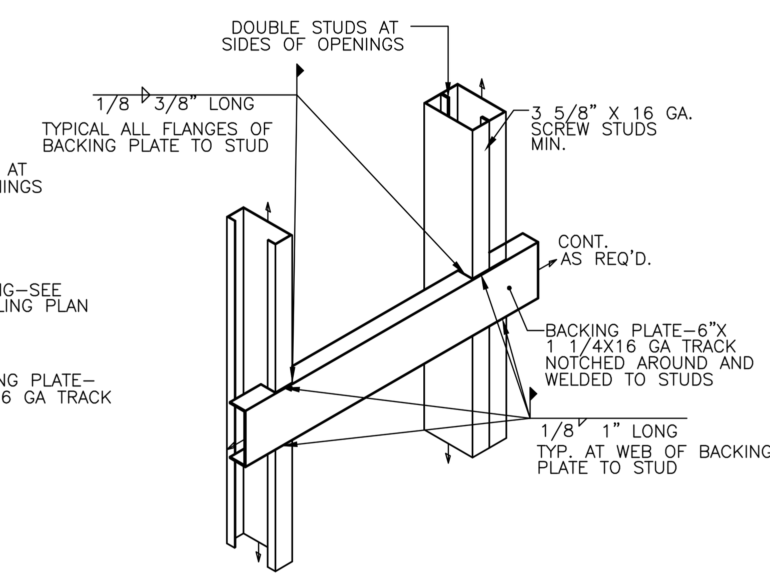

CONNECTION DETAIL

NOTES:

1. TYPE 'B' BACKING PLATE FOR UPPER WALL HUNG CABINETS–UP TO 2 SHELVES–, BASE CABINETS, FULL HEIGHT CABINETS, FILM VIEWING COUNTERS, WALL HUNG BENCHES, HANDRAILS, GUARDRAILS, GRAB BARS,WALL HUNG EQUIPMENT,ETC. MAXIUM WEIGHT–100 POUNDS/FOOT
2. VERIFY LENGTH, HEIGHT, LOCATION OF BACKING PLATE AND NUMBER REQUIRED WITH MANUFACTURER OF ITEMS IN NOTE 1.
3. USE # 12 SELF TAPPING SHEET METAL SCREWS WHEN ATTACHING ITEMS TO BACKING PLATE.
4. WALL STUD FLANGES ARE CONTINUOUS
5. WALL MOUNTED GREATER THAN 100 LBS., NO OPENINGS ABOVE.
6. FLOOR MOUNTED UNITS GREATER THAN 400LBS., NO OPENINGS ABOVE.

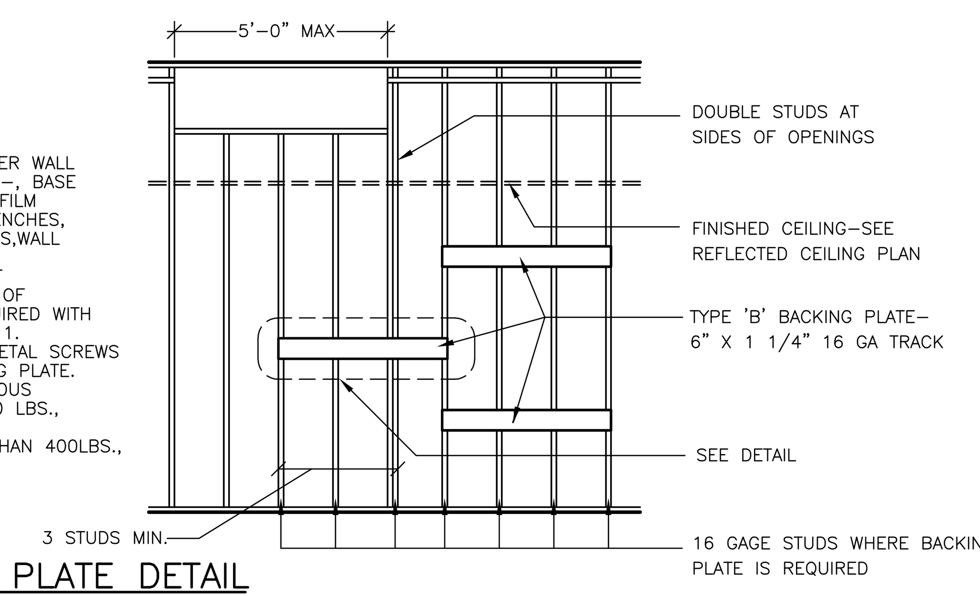

18
A-3.1 A-1.0
TYPE "B" BACKING PLATE DETAIL
SCALE: 1" = 1'-0"

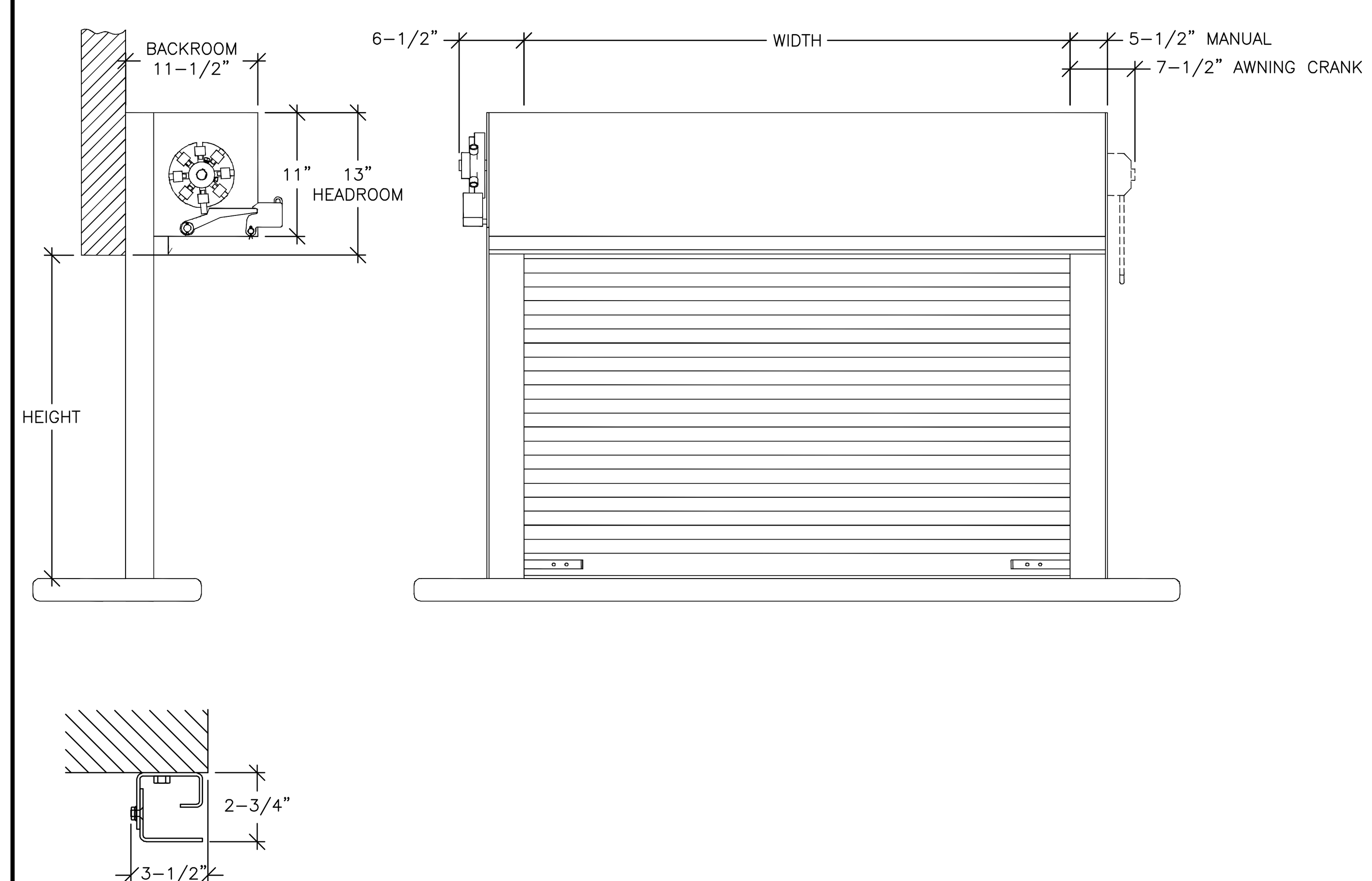

23
A-3.1 A-1.0
COUNTER SHUTTER
SCALE: N.T.S.

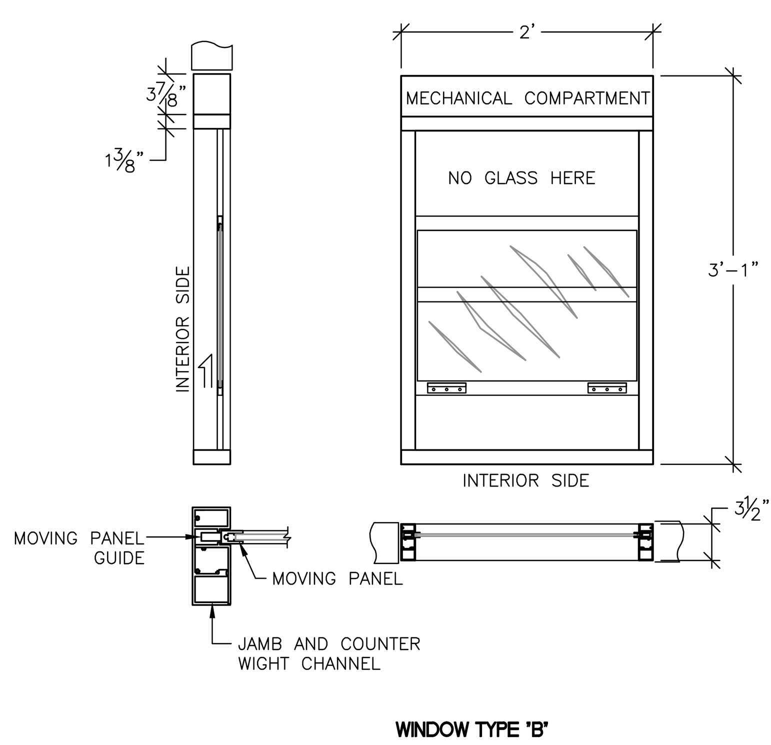

22
A-3.1 A-1.0
DENTAL LABORATORY PASS THRU WINDOW DETAIL.
SCALE: 1" = 1'-0"

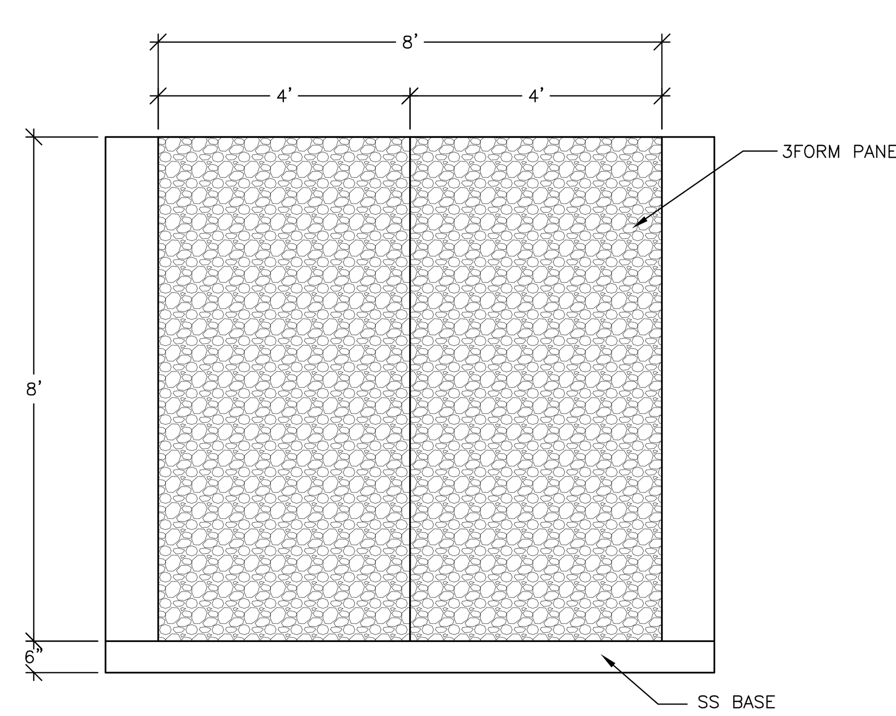

19
A-3.1 A-1.0
ELEVATION WAITING AREA WALL
SCALE: 1" = 1'-0"

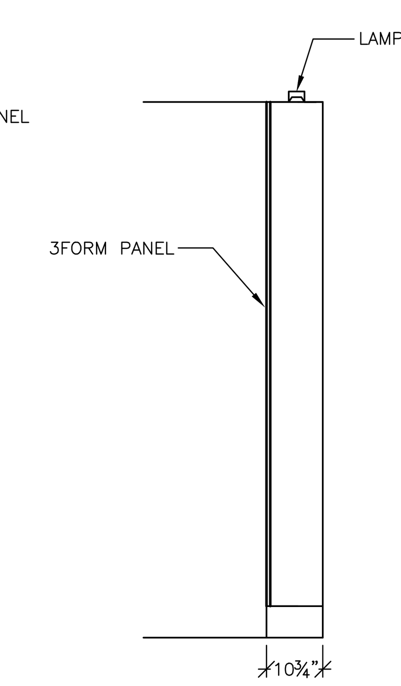

20
A-3.1 A-1.0
SECTION WAITING AREA WALL
SCALE: 1" = 1'-0"

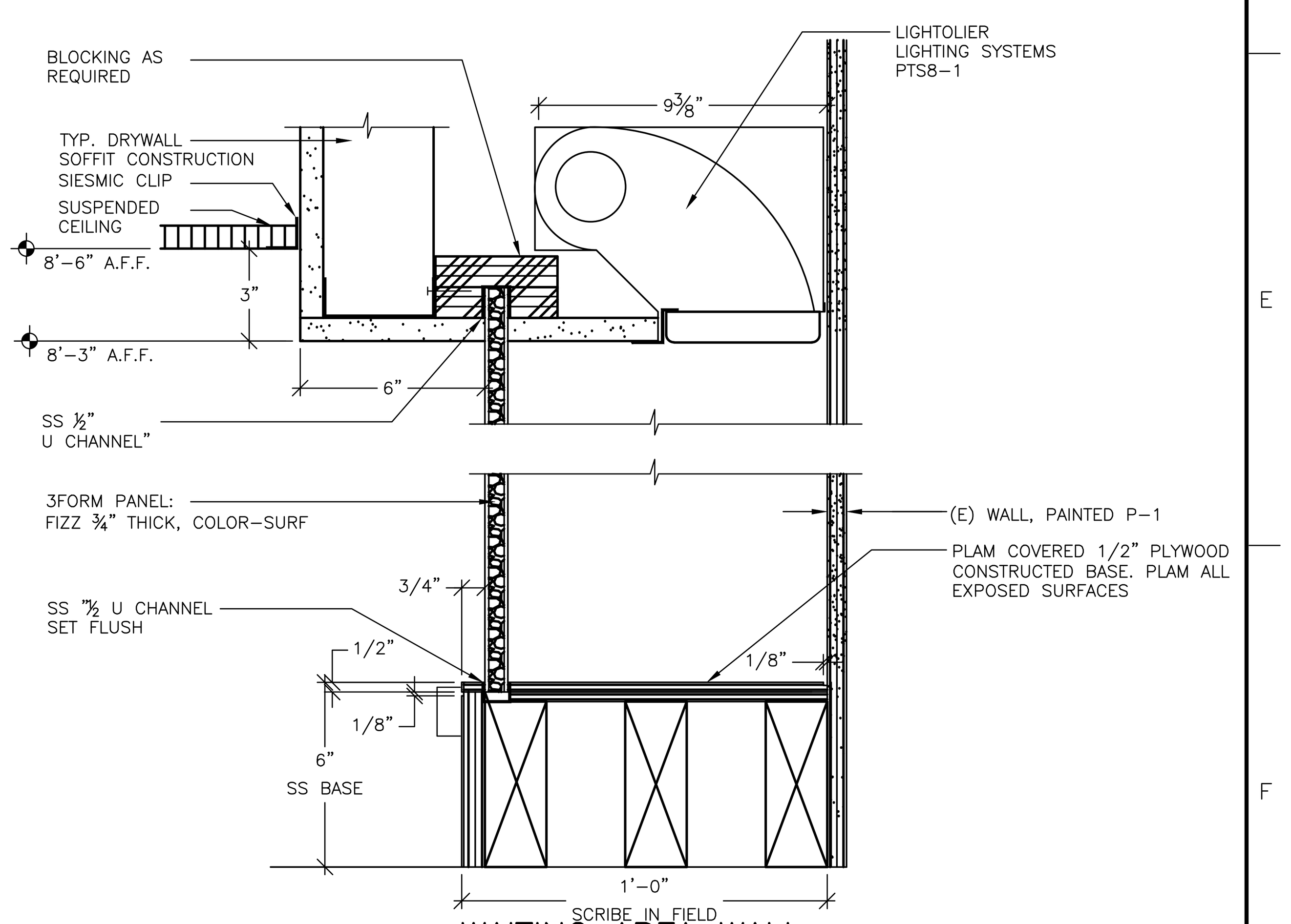

21
A-3.1 A-1.1
WAITING AREA WALL SOFFIT AND BASE DETAIL
SCALE: 1" = 1'-0"

Revisions:	Date
ISSUE FOR BID	04/17/12
ISSUE FOR 100% REVIEW	02/9/12
ISSUE FOR 95% REVIEW	12/9/11
ISSUE FOR 65% REVIEW	07/7/11
ISSUE FOR 35% REVIEW	03/24/11

CONSULTANTS:

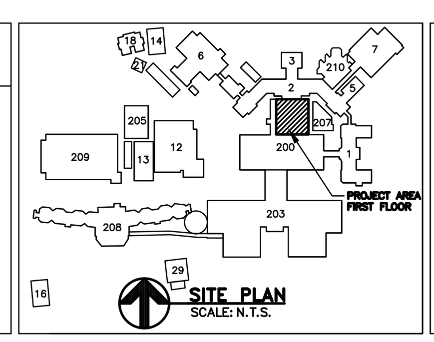

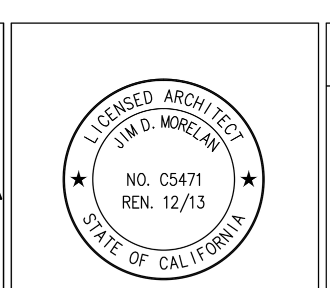

STAMP

ARCHITECT/ENGINEERS:

ADVANCE DESIGN CONSULTANTS, INC
PROFESSIONAL ENGINEERS
998 PARK AVENUE SAN JOSE, CA 95126
(408) 297–1881 FAX: (408) 294–3186
WWW.ADCENGINEERS.COM

ATTENTION:

ONLY WET SIGNED DOCUMENTS CONSTITUTE ADVANCE DESIGN CONSULTANTS, INC. PROFESSIONAL WORK AND BECAUSE OTHER REPRODUCIBLE DOCUMENTS MAY BE EASILY ALTERED WITHOUT THE CONSENT OF ADVANCE DESIGN CONSULTANTS, INC., THE WET SIGNED DOCUMENTS MUST BE REFERRED TO FOR THE ORIGINAL AND CORRECT INFORMATION. IF THERE ANY DIFFERENCES BETWEEN THE WET SIGNED DOCUMENTS AND ANY OTHER DOCUMENTS, THE WET SIGNED DOCUMENTS SHALL GOVERN.

ADVANCE DESIGN CONSULTANTS, INC. IS NOT RESPONSIBLE FOR ANY MODIFICATIONS MADE TO OUR DOCUMENTS BY ANYONE OTHER THAN AUTHORIZED REPRESENTATIVES OF ADVANCE DESIGN CONSULTANTS, INC.

Drawing Title:
ARCHITECTURAL CONSTRUCTION DETAILS DOOR AND WINDOW SCHEDULE

Approved Project Director:

Project Title:
BUILDING 200 DENTAL CLINIC

Location:
4150 CLEMENT ST. SAN FRANCISCO, CA

Date: NOVEMBER 2011
Checked: J. MORELAN
Drawn: R. RIOS

Project Number: 662-11-108
Building Number: 200
Drawing Number: 200-A-30-3.1
Dwg. 08 of 44

Office of Construction and Facilities Management
Department of Veterans Affairs

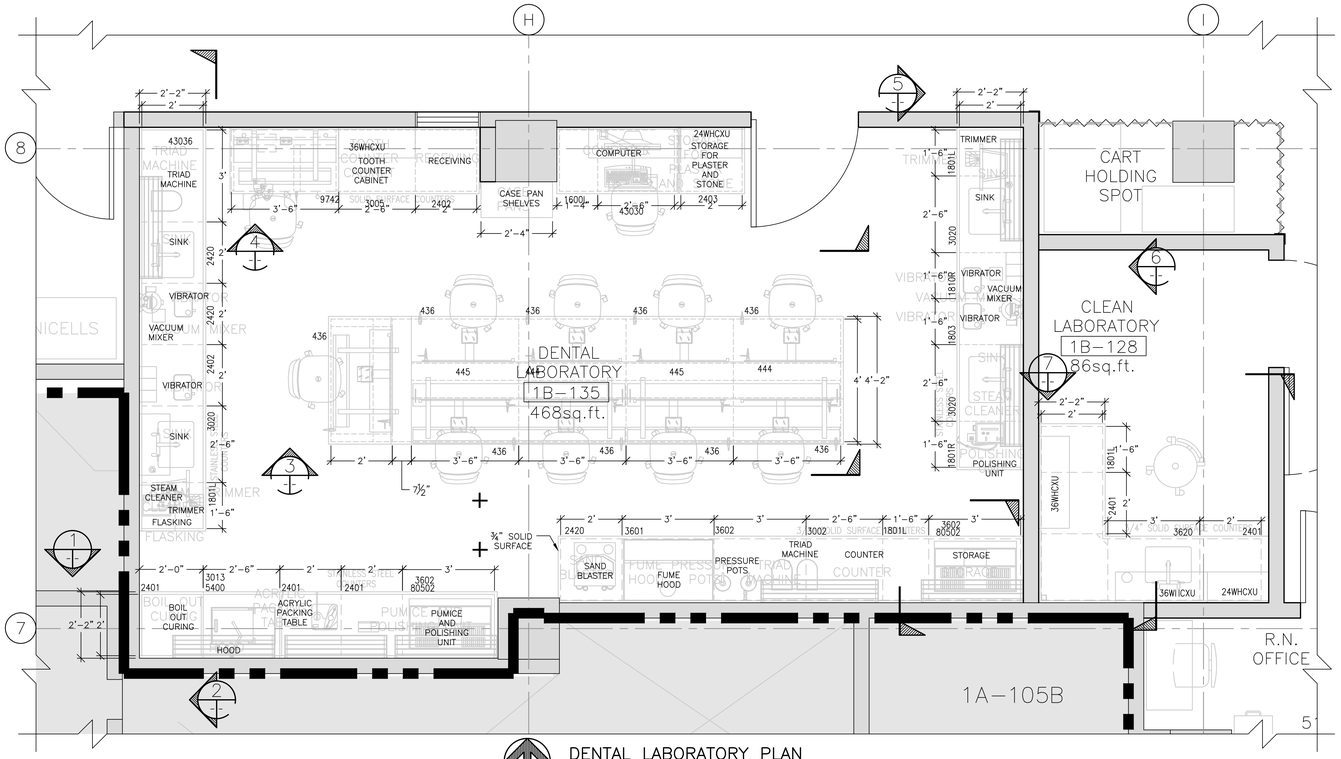

DENTAL LABORATORY PLAN
SCALE: 1/4" = 1'-0"

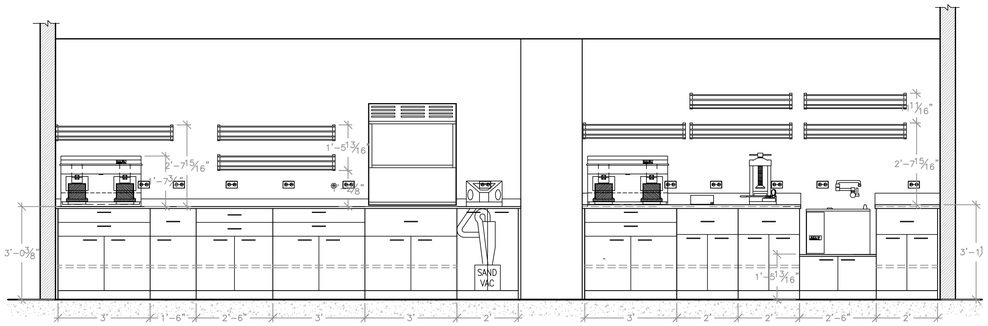

1 SECTION
SCALE: 1/2"=-1'0"

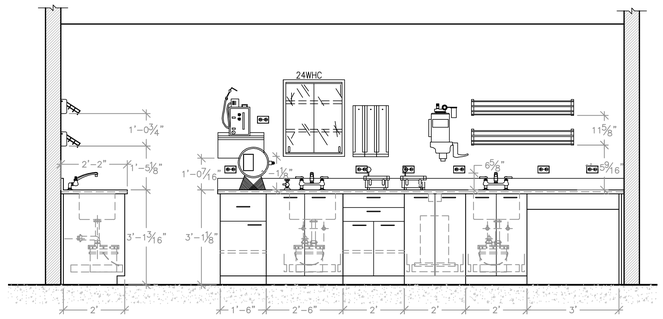

2 SECTION
SCALE: 1/2"=-1'0"

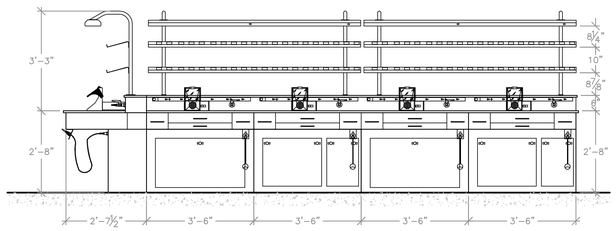

3 SECTION
SCALE: 1/2"=-1'0"

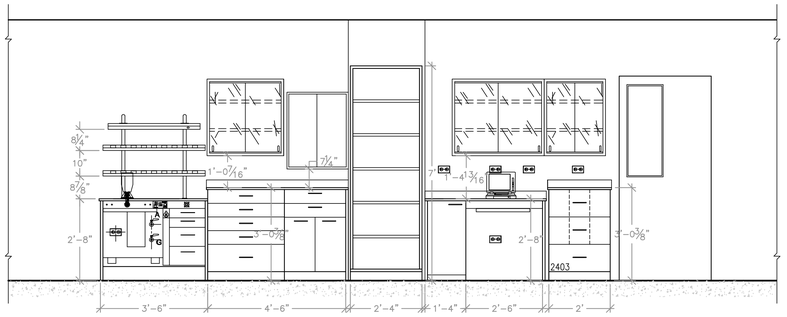

4 SECTION
SCALE: 1/2"=-1'0"

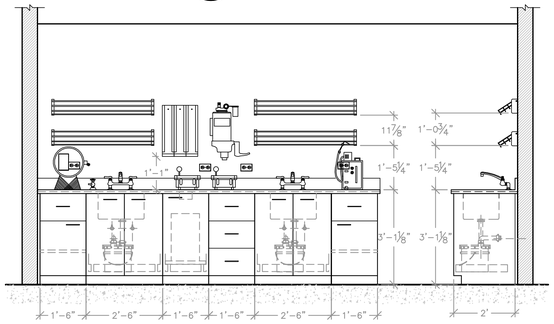

5 SECTION
SCALE: 1/2"=-1'0"

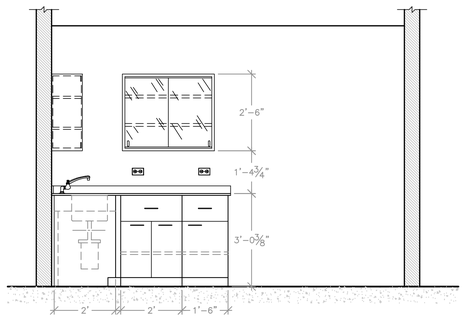

6 SECTION
SCALE: 1/2"=-1'0"

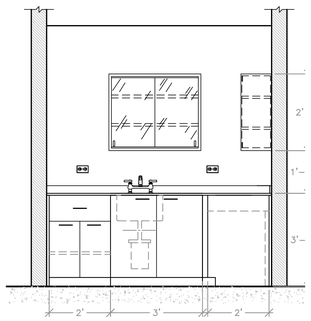

7 SECTION
SCALE: 1/2"=-1'0"

SHEET NOTES:

1. ALL CASEWORK, CABINETS, RACKS, SINKS AND COUNTERS SHALL BE CONTRACTOR FURNISHED AND CONTRACTOR INSTALLED.

2. THE V.A. WILL FURNISH ALL PORTABLE LAB EQUIPMENT SUCH AS TRIMMER, VIBRATORS, MIXERS, POLISHING UNITS, TRIAD MACHINES, PRESSURE POTS, SAND BLASTER AND STEAM CLEANER.

3. HOODS ARE EXISTING, CONTRACTOR SHALL RELOCATE THEM IN NEW LOCATIONS.

Revisions:	Date
ISSUE FOR BID	04/17/12
ISSUE FOR 100% REVIEW	02/9/12
ISSUE FOR 95% REVIEW	12/9/11
ISSUE FOR 65% REVIEW	07/7/11
ISSUE FOR 35% REVIEW	03/24/11

VA FORM 08-6231

CONSULTANTS:

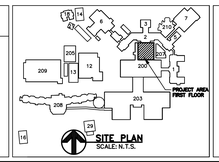

SITE PLAN
SCALE: N.T.S.

LICENSED ARCHITECT JIM D. MORELAN NO. C5471 REN. 12/13 STATE OF CALIFORNIA

STAMP

ARCHITECT/ENGINEERS:

ADVANCE DESIGN CONSULTANTS, INC
PROFESSIONAL ENGINEERS
998 PARK AVENUE SAN JOSE, CA 95126
(408) 297-1881 FAX: (408) 294-3186
WWW.ADCENGINEERS.COM

ATTENTION:

ONLY WET SIGNED DOCUMENTS CONSTITUTE ADVANCE DESIGN CONSULTANTS, INC. PROFESSIONAL WORK AND BECAUSE OTHER REPRODUCIBLE DOCUMENTS MAY BE EASILY ALTERED WITHOUT THE CONSENT OF ADVANCE DESIGN CONSULTANTS, INC., THE WET SIGNED DOCUMENTS MUST BE REFERRED TO FOR THE ORIGINAL AND CORRECT INFORMATION. IF THERE ANY DIFFERENCES BETWEEN THE WET SIGNED DOCUMENTS AND ANY OTHER DOCUMENTS, THE WET SIGNED DOCUMENTS SHALL GOVERN.

ADVANCE DESIGN CONSULTANTS, INC. IS NOT RESPONSIBLE FOR ANY MODIFICATIONS MADE TO OUR DOCUMENTS BY ANYONE OTHER THAN AUTHORIZED REPRESENTATIVES OF ADVANCE DESIGN CONSULTANTS, INC.

Drawing Title: DENTAL LABORATORY PLAN AND SECTIONS

Approved Project Director:

Project Title: BUILDING 200 DENTAL CLINIC

Location: 4150 CLEMENT ST. SAN FRANCISCO, CA

Date: NOVEMBER 2011 | Checked: J. MORELAN | Drawn: J. AGUIRRE

Project Number: 662-11-108

Building Number: 200

Drawing Number: 200-A-30-4.0

Dwg. 09 of 44

Office of Construction and Facilities Management

Department of Veterans Affairs

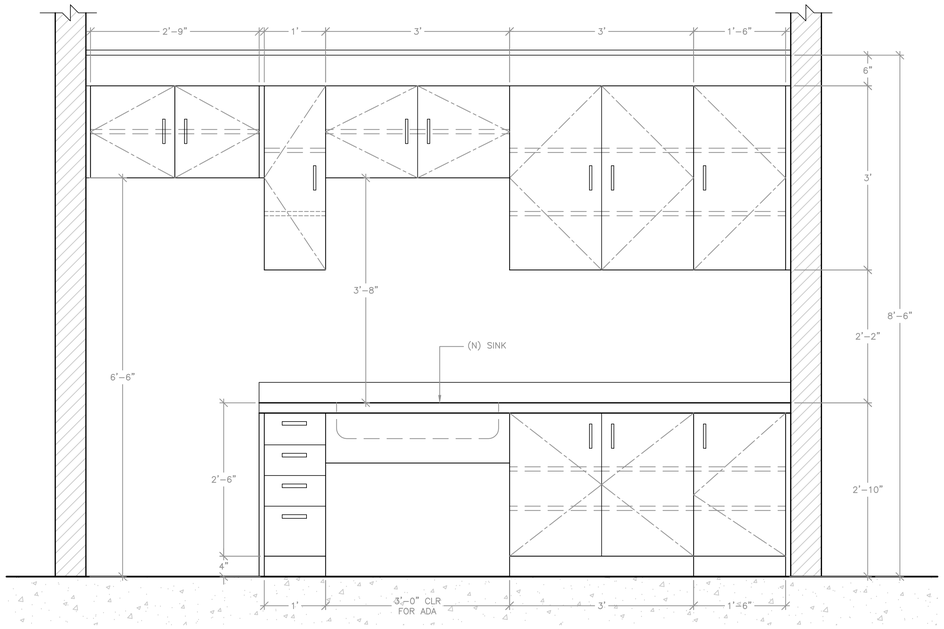

1 A-4.1 A-1.0 LOCKER /BREAK ROOM 1B-124A (N) CASE WORK
SCALE: 1" = 1'-0"

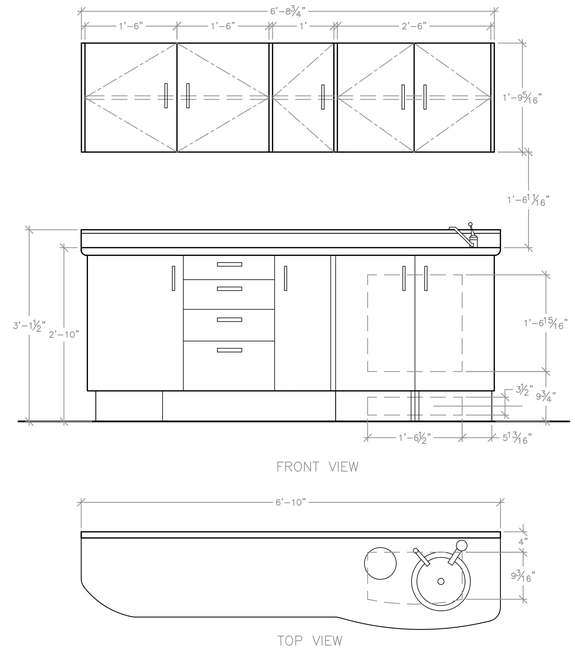

2 A-4.1 A-1.0 CABINET MODEL SS82-3
SCALE: 1" = 1'-0"

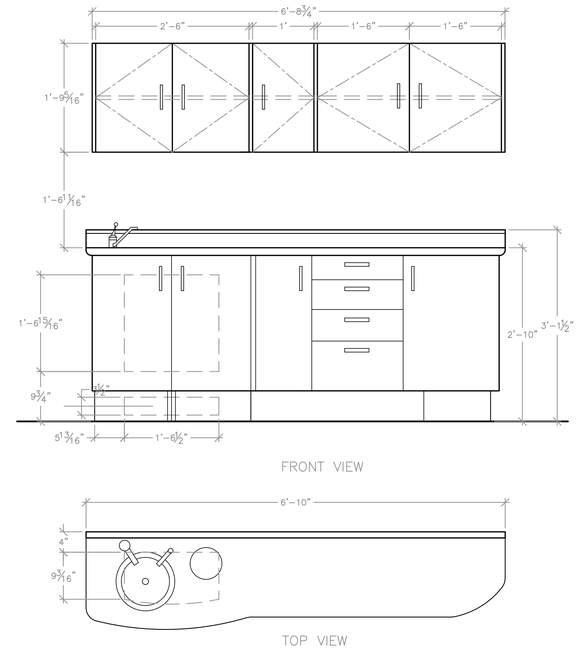

3 A-4.1 A-1.0 CABINET MODEL SS82-9
SCALE: 1" = 1'-0"

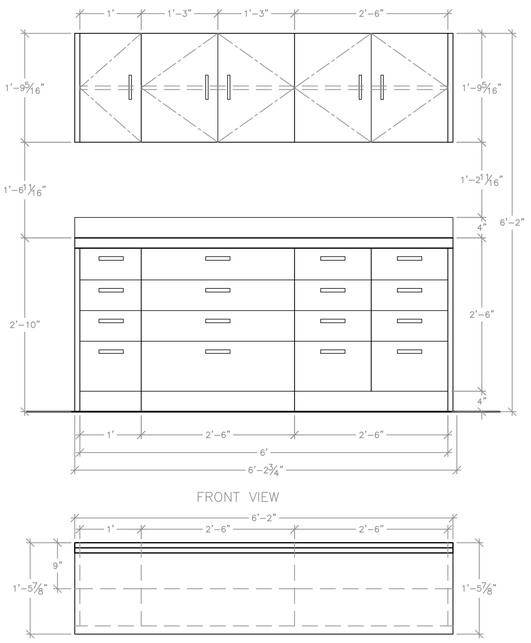

4 A-4.1 A-1.0 CABINET CWX 001
SCALE: 1" = 1'-0"

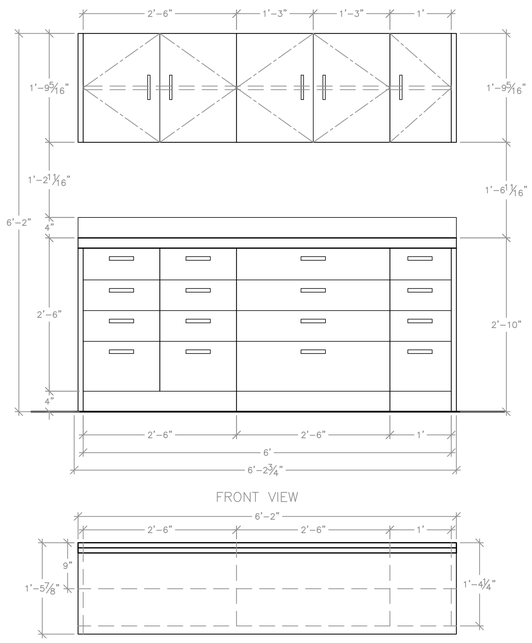

5 A-4.1 A-1.0 CABINET CWX 002
SCALE: 1" = 1'-0"

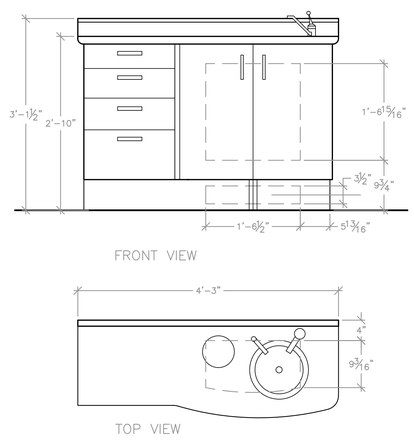

6 A-4.1 A-1.0 CABINET MODEL SS51-3
SCALE: 1" = 1'-0"

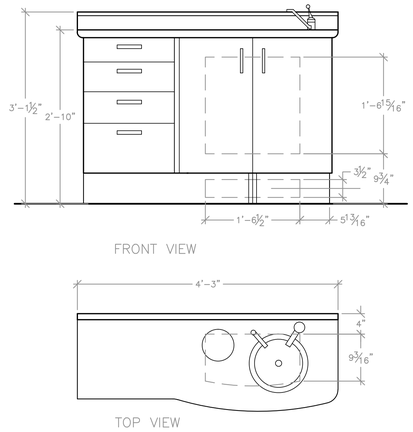

7 A-4.1 A-1.0 CABINET MODEL SS51-9
SCALE: 1" = 1'-0"

GENERAL NOTES:

1. THE SINKS IN THE CABINETS WITH MODEL NUMBERS SS82-3, SS82-9, SS51-3 AND SS51-9 (PELTON AND CRANE RENAISSANCE CATALOG) ARE INCLUDED IN THE INSTALLATION PACKAGES.
2. THE CABINETS CWX 001,002, 003 AND 004 ARE MODULAR CASE WORK (PELTON AND CRANE CASEWORKS UPPER AND METAL BASE MODULES CATALOG) CONTRACTOR SHALL INSTALL SAME MODULAR CABINETS OR SHALL INSTALL CABINETS WITH SAME SPECIFICATIONS AND QUALITY.
3. FOR CABINET LOCATIONS AND QUANTITY CONTRACTOR SHALL REFER TO DWG 200-A-30-1.0

Revisions:	Date
ISSUE FOR BID	04/17/12
ISSUE FOR 100% REVIEW	02/9/12
ISSUE FOR 95% REVIEW	12/9/11
ISSUE FOR 65% REVIEW	07/7/11
ISSUE FOR 35% REVIEW	03/24/11

CONSULTANTS:

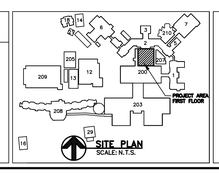

SITE PLAN
SCALE: N.T.S.

STAMP

ARCHITECT/ENGINEERS:

ADVANCE DESIGN CONSULTANTS, INC
PROFESSIONAL ENGINEERS

998 PARK AVENUE SAN JOSE, CA 95126
(408) 297-1881 FAX: (408) 294-3186

WWW.ADCENGINEERS.COM

ATTENTION:

ONLY WET SIGNED DOCUMENTS CONSTITUTE ADVANCE DESIGN CONSULTANTS, INC. PROFESSIONAL WORK AND BECAUSE OTHER REPRODUCIBLE DOCUMENTS MAY BE EASILY ALTERED WITHOUT THE CONSENT OF ADVANCE DESIGN CONSULTANTS, INC., THE WET SIGNED DOCUMENTS MUST BE REFERRED TO FOR THE ORIGINAL AND CORRECT INFORMATION. IF THERE ANY DIFFERENCES BETWEEN THE WET SIGNED DOCUMENTS AND ANY OTHER DOCUMENTS, THE WET SIGNED DOCUMENTS SHALL GOVERN.

ADVANCE DESIGN CONSULTANTS, INC. IS NOT RESPONSIBLE FOR ANY MODIFICATIONS MADE TO OUR DOCUMENTS BY ANYONE OTHER THAN AUTHORIZED REPRESENTATIVES OF ADVANCE DESIGN CONSULTANTS, INC.

Drawing Title: ARCHITECTURAL CASE WORK DETAILS

Approved Project Director:

Project Title: BUILDING 200 DENTAL CLINIC

Location: 4150 CLEMENT ST. SAN FRANCISCO, CA

Date: NOVEMBER 2011 | Checked: J. MORELAN | Drawn: J.AGUIRRE

Project Number: 662-11-108

Building Number: 200

Drawing Number: 200-A-30-4.1

Dwg. 10 of 44

Office of Construction and Facilities Management

Department of Veterans Affairs

VA FORM 08-6231

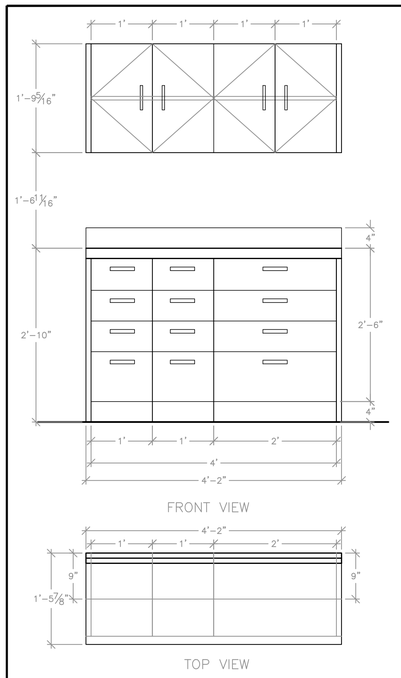

8 A-4.2 A-1.0 CABINET CWX 003
SCALE: 1" = 1'-0"

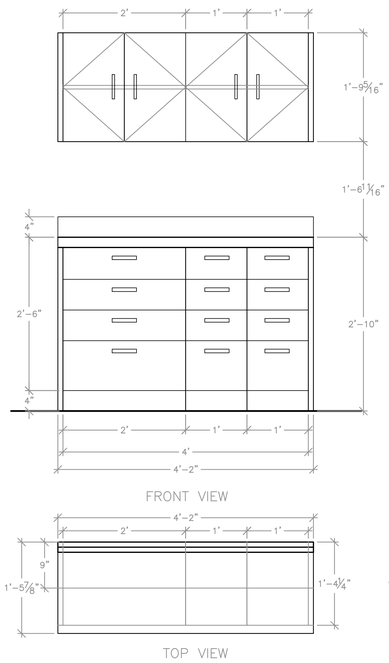

9 A-4.2 A-1.0 CABINET CWX 004
SCALE: 1" = 1'-0"

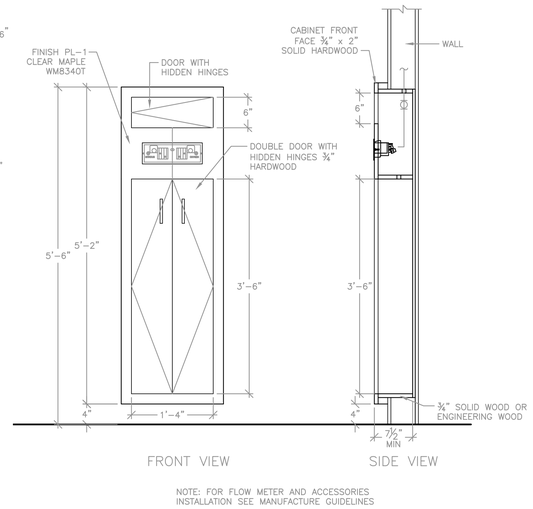

NOTE: FOR FLOW METER AND ACCESSORIES
INSTALLATION SEE MANUFACTURE GUIDELINES

10 A-4.2 A-1.0 WALL MOUNTED FLOW METER CABINET
SCALE: 1" = 1'-0"

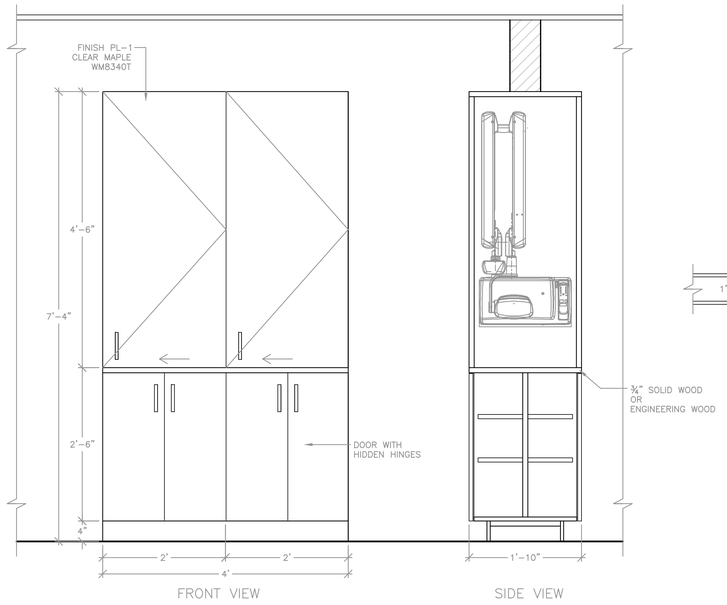

NOTE: X-RAY INSTALLATION SEE
MANUFACTURE GUIDELINES

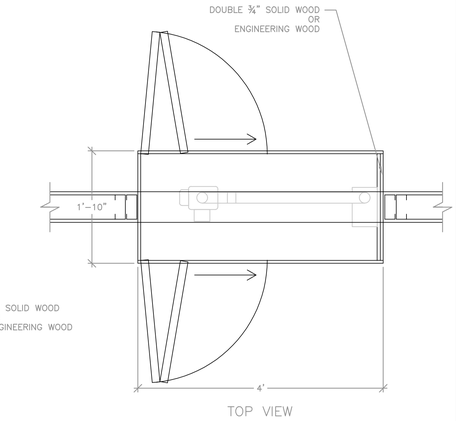

11 A-4.2 A-1.0 PASS THRU X-RAY CABINET
SCALE: 1" = 1'-0"

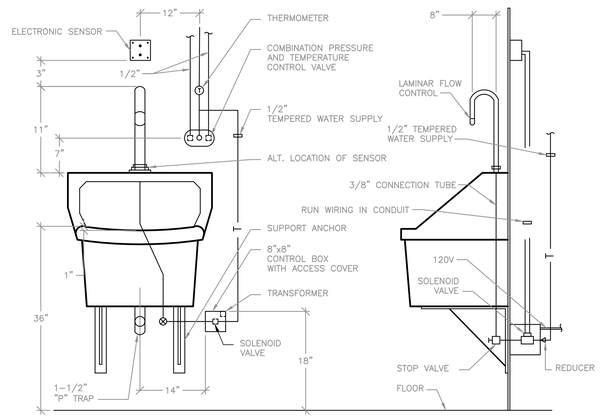

16 A-3.1 A-1.0 SURGEONS SCRUB SINK DETAIL
SCALE: 1" = 1'-0"

Revisions:	Date
ISSUE FOR BID	04/17/12
ISSUE FOR 100% REVIEW	02/9/12
ISSUE FOR 95% REVIEW	12/9/11
ISSUE FOR 65% REVIEW	07/7/11
ISSUE FOR 35% REVIEW	03/24/11

CONSULTANTS:

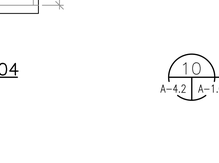

LICENSED ARCHITECT
JIM D. MORELAN
NO. C5471
REN. 12/13
STATE OF CALIFORNIA
STAMP

ARCHITECT/ENGINEERS:

ADVANCE DESIGN CONSULTANTS, INC
PROFESSIONAL ENGINEERS
998 PARK AVENUE SAN JOSE, CA 95126
(408) 297-1881 FAX: (408) 294-3186
WWW.ADCENGINEERS.COM

ATTENTION:
ONLY WET SIGNED DOCUMENTS CONSTITUTE ADVANCE DESIGN CONSULTANTS, INC. PROFESSIONAL WORK AND BECAUSE OTHER REPRODUCIBLE DOCUMENTS MAY BE EASILY ALTERED WITHOUT THE CONSENT OF ADVANCE DESIGN CONSULTANTS, INC., THE WET SIGNED DOCUMENTS MUST BE REFERRED TO FOR ACCURATE AND CONFIDENTIAL INFORMATION. IF THERE ANY DIFFERENCES BETWEEN THE WET SIGNED DOCUMENTS AND ANY OTHER DOCUMENTS, THE WET SIGNED DOCUMENTS SHALL GOVERN.

ADVANCE DESIGN CONSULTANTS, INC. IS NOT RESPONSIBLE FOR ANY MODIFICATIONS MADE TO OUR DOCUMENTS BY ANYONE OTHER THAN AUTHORIZED REPRESENTATIVES OF ADVANCE DESIGN CONSULTANTS, INC.

Drawing Title:
ARCHITECTURAL
CASE WORK DETAILS

Approved Project Director:

Project Title:
BUILDING 200
DENTAL CLINIC

Location:
4150 CLEMENT ST. SAN FRANCISCO, CA

Date: NOVEMBER 2011
Checked: J. MORELAN
Drawn: J.AGUIRRE

Project Number: 662-11-108
Building Number: 200
Drawing Number: 200-A-30-4.2
Dwg. 11 of 44

Office of Construction and Facilities Management
Department of Veterans Affairs

VA FORM 08-6231

DEMOLITION PLAN
SCALE: 1/4" = 1'-0"

DEMOLITION NOTES:

1. REMOVE (E) MEDICAL EQUIPMENT, FURNITURE, AND FURNISHINGS AND TURN OVER TO VA.
2. REMOVE (E) OFFICE EQUIPMENT, FURNITURE, AND FURNISHINGS AND SAVE TO ON-SITE STORAGE FOR FUTURE VA USE. RELOCATION OF DOOR FRAME OR HARDWARE IS AT CONTRACTORS OWN RISK.
3. REMOVE (E) DOOR, FRAME, HARDWARE AND SAVE FOR RELOCATION IN THIS PROJECT OR STORAGE.
4. REMOVE (E) VINYL FLOORING AND CLEAN ADHESIVE FROM EXISTING CONCRETE SLAB.
5. REMOVE AND DISPOSE (E) CARPET AND CLEAN ADHESIVE FROM EXISTING CONRETE SLAB.
6. REMOVE (E) WINDOWS.

LEGEND:

TO BE DEMOLISHED

ASBESTOS ABATEMENT NOTES:

1. FLOOR TILES AND MASTIC CONTAIN NON-FRIABLE ASBESTOS BEARING MATERIALS. SEE SPECIFICATION SECTION # 02 82 11 FOR REMOVAL AND DISPOSAL REQUIREMENTS.

LEAD REMOVAL NOTES:

1. CONTRACTOR TO REMOVE LEAD SHIELDING CONTAINED IN EXISTING X-RAY ROOM 1B-130 SURROUNDING WALLS.

Revisions:	Date
ISSUE FOR BID	04/17/12
ISSUE FOR 100% REVIEW	02/9/12
ISSUE FOR 95% REVIEW	12/9/11
ISSUE FOR 65% REVIEW	07/7/11
ISSUE FOR 35% REVIEW	03/24/11

CONSULTANTS:

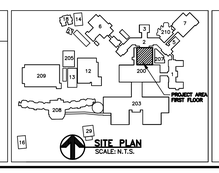

SITE PLAN
SCALE: N.T.S.

LICENSED ARCHITECT JIM D. MORELAN NO. C5471 REN. 12/13 STATE OF CALIFORNIA

STAMP

ARCHITECT/ENGINEERS:

ADVANCE DESIGN CONSULTANTS, INC
PROFESSIONAL ENGINEERS
998 PARK AVENUE SAN JOSE, CA 95126
(408) 297-1881 FAX: (408) 294-3186
WWW.ADCENGINEERS.COM

ATTENTION:
ONLY WET SIGNED DOCUMENTS CONSTITUTE ADVANCE DESIGN CONSULTANTS, INC. PROFESSIONAL WORK AND BECAUSE OTHER REPRODUCIBLE DOCUMENTS MAY BE EASILY ALTERED WITHOUT THE CONSENT OF ADVANCE DESIGN CONSULTANTS, INC., THE WET SIGNED DOCUMENTS MUST BE REFERRED TO FOR ACCURATE AND CORRECT INFORMATION. IF THERE ANY DIFFERENCES BETWEEN THE WET SIGNED DOCUMENTS AND ANY OTHER DOCUMENTS, THE WET SIGNED DOCUMENTS SHALL GOVERN.

ADVANCE DESIGN CONSULTANTS, INC. IS NOT RESPONSIBLE FOR ANY MODIFICATIONS MADE TO OUR DOCUMENTS BY ANYONE OTHER THAN AUTHORIZED REPRESENTATIVES OF ADVANCE DESIGN CONSULTANTS, INC.

Drawing Title: ARCHITECTURAL DEMOLITION FLOOR PLAN

Approved Project Director:

Project Title: BUILDING 200 DENTAL CLINIC

Location: 4150 CLEMENT ST. SAN FRANCISCO, CA

Date: NOVEMBER 2011 | Checked: J. MORELAN | Drawn: J. AGUIRRE

Project Number: 662-11-108

Building Number: 200

Drawing Number: 200-AD-30-1.0

Dwg. 12 of 44

Office of Construction and Facilities Management

Department of Veterans Affairs

VA FORM 08-6231

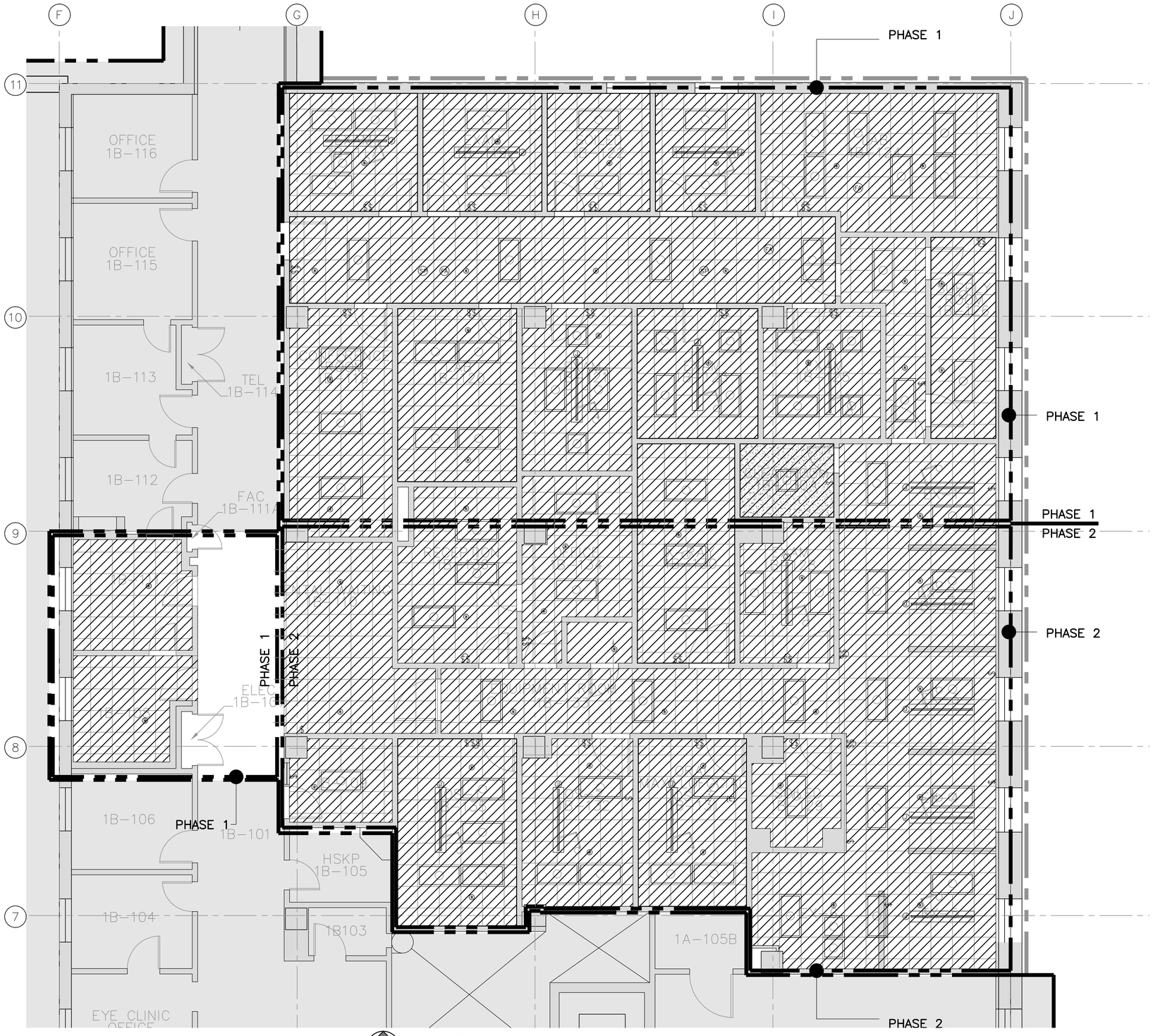

DEMOLITION PLAN

SCALE: 1/4" = 1'–0"

DEMOLITION NOTES:

1. CONTRACTOR SHALL DEMOLISH (E) CEILING TILES AND DEMOLISH (E) T–BARS.

LEGEND:

TO BE DEMOLISHED

ASBESTOS ABATEMENT NOTES:

1. FLOOR TILES AND MASTIC CONTAIN NON–FRIABLE ASBESTOS BEARING MATERIALS. SEE SPECIFICATION SECTION # 02 82 11 FOR REMOVAL AND DISPOSAL REQUIREMENTS.

Revisions:	Date
ISSUE FOR BID	04/17/12
ISSUE FOR 100% REVIEW	02/9/12
ISSUE FOR 95% REVIEW	12/9/11
ISSUE FOR 65% REVIEW	07/7/11
ISSUE FOR 35% REVIEW	03/24/11

CONSULTANTS:

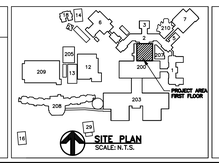

SITE PLAN
SCALE: N.T.S.

LICENSED ARCHITECT
JIM D. MORELAN
NO. C5471
REN. 12/13
STATE OF CALIFORNIA

STAMP

ARCHITECT/ENGINEERS:

ADVANCE DESIGN CONSULTANTS, INC
PROFESSIONAL ENGINEERS

998 PARK AVENUE SAN JOSE, CA 95126
(408) 297–1881 FAX: (408) 294–3186

WWW.ADCENGINEERS.COM

ATTENTION:

ONLY WET SIGNED DOCUMENTS CONSTITUTE ADVANCE DESIGN CONSULTANTS, INC. PROFESSIONAL WORK AND BECAUSE OTHER REPRODUCIBLE DOCUMENTS MAY BE EASILY ALTERED WITHOUT THE CONSENT OF ADVANCE DESIGN CONSULTANTS, INC., THE WET SIGNED DOCUMENTS MUST BE REFERRED TO FOR THE ORIGINAL AND CORRECT INFORMATION. IF THERE ANY DIFFERENCES BETWEEN THE WET SIGNED DOCUMENTS AND ANY OTHER DOCUMENTS, THE WET SIGNED DOCUMENTS SHALL GOVERN.

ADVANCE DESIGN CONSULTANTS, INC. IS NOT RESPONSIBLE FOR ANY MODIFICATIONS MADE TO OUR DOCUMENTS BY ANYONE OTHER THAN AUTHORIZED REPRESENTATIVES OF ADVANCE DESIGN CONSULTANTS, INC.

Drawing Title:
ARCHITECTURAL
DEMOLITION CEILING PLAN

Approved Project Director:

Project Title:
BUILDING 200
DENTAL CLINIC

Location:
4150 CLEMENT ST. SAN FRANCISCO, CA

Date: NOVEMBER 2011
Checked: J. MORELAN
Drawn: J. AGUIRRE

Project Number: 662-11-108
Building Number: 200
Drawing Number: 200-AD-30-1.1
Dwg. 13 of 44

Office of Construction and Facilities Management
Department of Veterans Affairs

VA FORM 08–6231

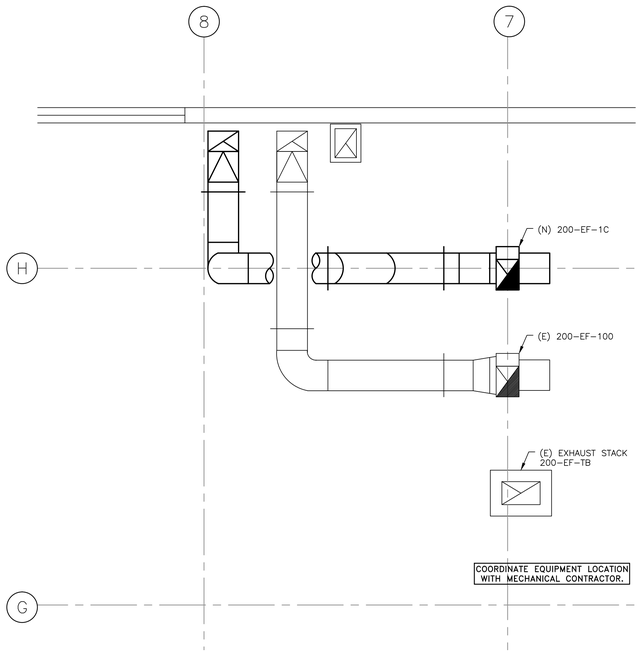

PARTIAL PENTHOUSE ROOF SEISMIC ANCHORAGE LOCATION PLAN

SCALE: 1/4"=1'-0"

SPECIFICATIONS

GENERAL:
ALL WORK SHALL CONFORM TO THE REQUIREMENTS OF THE CURRENT GOVERNING EDITION OF THE CALIFORNIA BUILDING CODE.

WOOD FRAMING
DOUGLAS FIR COAST REGION, CONFORMING TO WEST COAST LUMBER INSPECTION BUREAU STANDARD GRADING AND DRESSING RULE No.17 AS AMENDED TO DATE.

1) 2x, 3x, 4x, PLATES, JOIST, PURLINS AND BEAMS No. 1 & BETTER, UNLESS NOTED OTHERWISE ON THE DRAWINGS.
2) 2x, 3x, 4x, JOISTS, PURLINS AND BEAMS SELECT STRUCTURAL, WHERE NOTED ON THE DRAWINGS.
3) 6x AND LARGER BEAMS, No. 1. WHEN BEAM WIDTH IS NOT MORE THAN 2" GREATER THAN THICKNESS, THE MEMBER SHALL CONFORM TO ITEM 7 BELOW.
4) 2x, 3x, 4x LEDGREGEN
5) ERS, No. 1, UNLESS NOTED OTHERWISE ON DRAWINGS
6) 4x4 POSTS, No. 1 UNLESS NOTED OTHERWISE ON THE DRAWINGS.
7) 4x6 POSTS, No. 1, WHEN POST WIDTH IS MORE THAN 2" GREATER THAN THICKNESS, THE MEMBER SHALL CONFORM TO ITEM 3 ABOVE.
8) 6x6 AND LARGER POSTS, No. 1, WHEN POST WIDTH IS MORE THAN 2" GREATER THAN THICKNESS, THE MEMBER SHALL CONFORM TO ITEM 3 ABOVE.
9) 2x4, 3x4, STUDS AND BLOCKING No. 2
10) 2x6 OR LARGER STUDS AND BLOCKING, No. 1.
11) FOUNDATION PLATES: PRESSURE TREATED DOUGLAS FIR.

ALL FRAMING LUMBER 6" OR LARGER IN THE LEAST DIMENSION SHALL BE FOHC. WOOD FRAMING MOISTURE CONTENT SHALL NOT EXCEED 19% AT TIME OF INSTALLATION.

REDWOOD CONFORMING TO THE STANDARD SPECIFICATIONS FOR GRADES OF CALIFORNIA REDWOOD LUMBER OF THE REDWOOD INSPECTION SERVICE, AS AMENDED TO DATE.

LAG SCREWS
ANSI/ASME B18.2.1-1981 (REF. 6) PRE-DRILL HOLES AND LUBRICATE SCREWS PER CURRENT NDS SPECIFICATION.

STRUCTURAL STEEL AND MISCELLANEOUS IRON
STRUCTURAL STEEL AND MISCELLANEOUS IRON SHALL BE CONSTRUCTED IN ACCORDANCE WITH AISC CODE OF STANDARD PRACTICE – CURRENT EDITION.

ALL STRUCTURAL STEEL AND MISCELLANEOUS IRON NOT EMBEDDED IN CONCRETE SHALL RECEIVE SHOP PRIME COAT EXCEPT ON SURFACES RECEIVING WELDS OR AT SLIP CRITICAL HIGH STRENGTH BOLTS, WHICH SHALL BE TOUCHED UP AFTER CONNECTION IS COMPLETE. STRUCTURAL STEEL AND MISCELLANEOUS IRON WHICH IS TO HAVE SPRAY ON FIREPROOFING SHALL NOT BE PAINTED. STRUCTURAL STEEL PERMANENTLY EXPOSED TO WEATHER SHALL RECEIVE TWO COATS OF SEMI-GLOSS ALKYD ENAMEL COMPATIBLE WITH PRIMER.

MACHINE BOLTS, ANCHOR BOLTS, STUDS AND THREADED RODS.
a. RODS SHALL CONFORM TO ASTM A307 GRADE A OR B OR A36.
b. NUTS SHALL BE SHOWN BELOW AND FINISH SHALL MATCH FASTENER.
FASTENER GRADE & SIZE: ASTM A36 OR ASTM A307A, ¼" TO ½"
NUT CLASS: ASTM A563-A
NUT STYLE: HEX
c. STEEL IN CONTRACT WITH TREADED WOOD SHALL BE, AT MINIMUM HOT DIPPED, GALVANIZED PER G185 HDG PER ASTM A6F3, BATCH/POST HOT-DIP GALVANIZED (PER ASTM A123 FOR CONNECTORS AND ASTM A153 FOR FASTENERS), MECHANICALLY GALVANIZED FASTENERS (PER ASTM B695, CLASS 55 OR GREATER) OR STAINLESS STEEL.
CONSTRUCTION PRACTICES, THE CONSTRUCTION CONTRACTOR AND THEIR SUBCONTRACTORS WILL BE REQUIRED TO ASSUME SOLE AND COMPLETE RESPONSIBILITY FOR JOB SITE CONDITIONS DURING THE COURSE OF CONSTRUCTION OF THE PROJECT, INCLUDING SAFETY OR ALL PERSONS AND PROPERTY; THAT THIS REQUIREMENT SHALL BE MADE TO APPLY CONTINUOUSLY AND NOT LIMITED TO NORMAL WORKING HOURS, AND THE CONSTRUCTION CONTRACTOR AND HIS SUBCONTRACTORS FURTHER AGREE TO DEFEND, INDEMNIFY AND HOLD THE DESIGN PROFESSIONAL HARMLESS FROM ANY AND ALL LIABILITY, REAL OR ALLEGED, IN CONNECTION WITH THE PERFORMANCE OF WORK ON THIS PROJECT, EXCEPT LIABILITY ARISING FROM THE SOLE NEGLIGENCE OF THE DESIGN PROFESSIONAL.

EXPANSION ANCHORS

EXPANSION ANCHORS SHALL BE HILTI KWIK BOLT TZ (KBTZ) WEDGE ANCHORS OR APPROVED EQUAL. CONTRACTOR SHALL TORQUE ANCHORS IN ACCORDANCE WITH ESR-1917.

SHOP DRAWINGS

FOR THE ENGINEERS REVIEW WILL BE REQUIRED AS FOLLOWS:
1. STRUCTURAL STEEL AND MISCELLANEOUS METALS, MILL CERTIFICATES, CONTRACTOR SHALL SUBMIT TWO SETS OF PRINTS AND ONE SET OF ELECTRONIC COPIES FOR REVIEW.
FABRICATION SHALL NOT PROCEED UNTIL SHOP DRAWINGS HAVE BEEN REVIEWED BY THE ENGINEER.

WELDING

ALL WELDING SHALL BE PERFORMED BY CERTIFIED WELDERS PER AWS "STANDARD QUALIFICATION PROCEDURE" TO PERFORM THE TYPE OF WORK REQUIRED. ALL WELDING SHALL BE IN ACCORDANCE WITH THE CURRENT AWS WELDING CODE. ARC WELDING ELECTRODES SHALL BE LOW HYDROGEN E70 SERIES FOR A36, A572 AND A992 MATERIAL, AND LOW HYDROGEN E80 SERIES FOR A706 REINFORCING STEEL. WELD METAL TOUGHNESS SHALL BE REPORTED ON THE ELECTRODE MANUFACTURES CERTIFICATE OF COMPLIANCE. ALL ELECTRODES SHALL HAVE A MINIMUM CVN VALUE OF 20 FT-LBS AT -20°F. EXCEPTIONS:
METAL DECK WELDING, STAIR AND HANDRAIL WELDING, LIGHT GAGE STEEL WELDING.
TACK WELDS, AIR-ARC GOUGING AND FLAME CUTTING SHALL NOT BE PERFORMED WITHOUT ADEQUATE PREHEAT OR INCORPORATION INTO THE FINAL WELD.
THE FILLER METAL MANUFACTURER'S PUBLISHED RECOMMENDATIONS SHALL BE THE BASIS FOR DETERMINING THE ALLOWABLE RANGE OF ESSENTIAL VARIABLES FOR THE PRE-QUALIFIED WPS.
WELD METAL TOUGHNESS SHALL BE REPORTED ON THE FILLER METAL MANUFACTURER'S CERTIFICATE OF COMPLIANCE. ALL FILLER METAL SHALL HAVE A MINIMUM CVN VALUE OF 20 FT-LBS AT 0° F. EXCEPTIONS: METAL DECK WELDING, STAIR AND HANDRAIL WELDING, LIGHT GAGE STEEL WELDING.
DEMAND CRITICAL WELDS DCW SHALL USE FILLER METAL WITH A MINIMUM CVN VALUE OF 20 FT-LBS AT -20°F AND 40 FT-LBS AT 70°F.
TRACK WELDS, AIR -ARC GOUGING AND FLAME CUTTING SHALL NOT BE PERFORMED WITHOUT ADEQUATE PREHEAT OR INCORPORATION INTO THE FINAL WELD.
THE FILLER METAL MANUFACTURER'S PUBLISHED RECOMMENDATIONS SHALL BE THE BASIS FOR DETERMINING THE ALLOWABLE RANGE OF ESSENTIAL VARIABLES FOR THE PREQUALIFIED WPS. UNLESS NOTED OTHERWISE ON THE PLANS, BACK-UP BARS FOR CJP WELDS SHALL BE REMOVED FOLLOWED BY BACKGOUGING AND BACKWELDING.

SUBMITTALS

FOR THE ENGINEERS REVIEW WILL BE REQUIRED AS FOLLOWS:
a. STRUCTURAL SHOP AND ERECTION DRAWINGS (PER AISC360 SEC 5 & APPENDIX W)
b. MISCELLANEOUS METAL SHOP DRAWINGS
c. WELDING PROCEDURE SPECIFICATIONS (AND PQR IF APPLICABLE)
CONTRACTOR SHALL SUBMIT TWO SETS OF PRINTS FOR REVIEW. FABRICATION SHALL NOT PROCEED UNTIL SUBMITTALS HAVE BEEN REVIEWED BY THE ENGINEER.

CONSTRUCTION LIABILITY

THE CONSTRUCTION CONTRACTOR AND THEIR SUBCONTRACTORS AGREE THAT IN ACCORDANCE WITH GENERALLY ACCEPTED CONSTRUCTION PRACTICES, THE CONSTRUCTION CONTRACTOR AND THEIR SUBCONTRACTORS WILL BE REQUIRED TO ASSUME SOLE AND COMPLETE RESPONSIBILITY FOR JOB SITE CONDITIONS DURING THE COURSE OF CONSTRUCTION OF THE PROJECT, INCLUDING SAFETY OR ALL PERSONS AND PROPERTY; THAT THIS REQUIREMENT SHALL BE MADE TO APPLY CONTINUOUSLY AND NOT LIMITED TO NORMAL WORKING HOURS, AND THE CONSTRUCTION CONTRACTOR AND HIS SUBCONTRACTORS FURTHER AGREE TO DEFEND, INDEMNIFY AND HOLD THE DESIGN PROFESSIONAL HARMLESS FROM ANY AND ALL LIABILITY, REAL OR ALLEGED, IN CONNECTION WITH THE PERFORMANCE OF WORK ON THIS PROJECT, EXCEPT LIABILITY ARISING FROM THE SOLE NEGLIGENCE OF THE DESIGN PROFESSIONAL.

SPECIAL INSPECTIONS REQUIRED

THE OWNER SHALL EMPLOY A SPECIAL INSPECTOR DURING CONSTRUCTION ON THE FOLLOWING TYPES OF WORK:

EXPANSION ANCHORS

THE SPECIAL INSPECTOR SHALL VERIFY THE FOLLOWING AND RECORD THE INFORMATION IN THE INSPECTION REPORT:
- ANCHOR TYPE, SIZE AND DIMENSIONS
- HOLE DIMENSIONS AND CLEANLINESS
- ANCHOR SPACING
- EDGE DISTANCES
- ANCHOR EMBEDMENT
- TORQUE VALUE

TORQUE SHALL BE VERIFIED BY EITHER CONTINUOUS INSPECTION DURING TOURQUING OR BY TESTING ANCHORS AS FOLLOWS: 100% OF THE ANCHORS SHALL BE TESTED USING A TOURQUE CALIBRATED WRENCH TO A MINIMUM OF TORQUE AS SPECIFIED IN THE ICC REPORT FOR THE ANCHOR.

SPECIAL INSPECTOR

THE SPECIAL INSPECTOR SHALL BE A QUALIFIED PERSON WHO SHALL DEMONSTRATE HIS COMPETENCE, TO THE SATISFACTION FOR THE BUILDING OFFICIAL, FOR INSPECTION OF A PARTICULAR TYPE OF CONSTRUCTION OR OPERATION REQUIRING SPECIAL INSPECTION.

DUTIES AND RESPONSIBILITIES OF THE SPECIAL INSPECTOR

SPECIAL INSPECTOR SHALL OBSERVE THE WORK ASSIGNED FOR CONFORMANCE WITH THE APPLICABLE PROJECT DRAWING AND SPECIFICATIONS.

THE SPECIAL INSPECTOR SHALL FURNISH INSPECTION REPORTS TO THE BUILDING OFFICIAL , THE OWNER OR OWNER'S DESIGNATED REPRESENTATIVE, THE ARCHITECT OR PROJECT MANAGER, THE STRUCTURAL ENGINEER OF RECORD, THE CONTRACTOR AND OTHER PERSONS DESIGNATED BY THE OWNER OR OWNER'S DESIGNATED REPRESENTATIVE. ALL DISCREPANCIES SHALL BE BROUGHT TO THE IMMEDIATE ATTENTION OF THE CONTRACTOR FOR CORRECTION, THEN IF UNCORRECTED , TO THE PROPER DESIGN AUTHORITY AND TO THE BUILDING OFFICIAL.

THE SPECIAL INSPECTOR SHALL SUBMIT A FINAL SIGNED REPORT STATING WHETHER THE WORK REQUIRING SPECIAL INSPECTION WAS, TO THE BEST OF THE INSPECTOR'S KNOWLEDGE , IN CONFORMANCE WITH THE PROJECT PLANS AND SPECIFICATIONS AND THE APPLICABLE WORKMANSHIP PROVISIONS OF THE UBC.

GENERAL

THESE PROVISIONS SHALL GOVERN THE QUALITY, WORKMANSHIP AND REQUIREMENTS FOR MATERIALS COVERED. MATERIALS OF CONSTRUCTION AND TEST SHALL CONFORM TO THE APPLICATION STANDARDS LISTED.

DEFINITIONS

QUALITY CONTROL – INSPECTION BY THE CONTRACTOR BY A QUALIFIED PERSON OF MATERIAL AND WORK PERFORMED BY THE CONTRACTOR.

QUALITY ASSURANCE – INSPECTION PROVIDED BY THE OWNER BY A QUALIFIED PERSON OF MATERIAL, WORK AND QUALITY CONTROL DOCUMENTS OR PROCEDURES.

SPECIAL INSPECTION CONTINUOUS – THE FULL-TIME OR INTERMITTENT OBSERVATION OF WORK REQUIRING SPECIAL INSPECTION BY AN APPROVED SPECIAL INSPECTOR WHO IS PRESENT IN THE AREA WHERE THE WORK HAS BEEN OR IS BEING PERFORMED AND AT THE COMPLETION OF THE WORK.

SPECIAL INSPECTION, PERIODIC – THE PART-TIME OR INTERMITTENT OBSERVATION OF WORK REQUIRING SPECIAL INSPECTION BY AN APPROVED SPECIAL INSPECTOR WHO IS PRESENT IN THE AREA WHERE THE WORK HAS BEEN OR IS BEING PERFORMED AND AT THE COMPLETION OF THE WORK.

STRUCTURAL OBSERVATION – THE VISUAL OBSERVATION OF THE STRUCTURAL SYSTEM BY A REGISTERED DESIGN PROFESSIONAL FOR GENERAL CONFORMANCE TO THE APPROVED CONSTRUCTION DOCUMENTS AT SIGNIFICANT CONSTRUCTION STAGES AND AT COMPLETION OF THE STRUCTURAL SYSTEM. STRUCTURAL OBSERVATION DOES NOT INCLUDE OR WAIVE THE RESPONSIBILITY FOR THE REQUIRED INSPECTIONS.

SPECIAL INSPECTIONS

THE OWNER SHALL EMPLOY ONE OR MORE SPECIAL INSPECTORS TO PROVIDE INSPECTIONS DURING CONSTRUCTION ON THE TYPES OF WORK LISTED HERE. THE SPECIAL INSPECTOR SHALL BE A QUALIFIED PERSON WHO SHALL DEMONSTRATE COMPETENCE, TO THE SATISFACTION OF THE BUILDING OFFICIAL, FOR INSPECTION OF THE PARTICULAR TYPE OF CONSTRUCTION OR OPERATION REQUIRING SPECIAL INSPECTION.

REPORT REQUIREMENT – THE INSPECTOR OF RECORD AND SPECIAL INSPECTOR SHALL FURNISH INSPECTION REPORTS TO THE BUILDING OFFICIAL, AND TO THE REGISTERED DESIGN PROFESSIONAL IN RESPONSIBLE CHARGE. REPORTS SHALL INDICATE THAT WORK INSPECTED WAS DONE IN CONFORMANCE TO APPROVED CONSTRUCTION DOCUMENTS. DISCREPANCIES SHALL BE BROUGHT TO THE IMMEDIATE ATTENTION OF THE CONTRACTOR FOR CORRECTION. IF THE DISCREPANCIES ARE NOT CORRECTED, THE DISCREPANCIES SHALL BE BROUGHT TO THE ATTENTION OF THE BUILDING OFFICIAL AND TO THE REGISTERED DESIGN PROFESSIONAL IN RESPONSIBLE CHARGE PRIOR TO THE COMPLETION OF THAT PHASE OF THE WORK. A FINAL REPORT DOCUMENTING REQUIRED SPECIAL INSPECTIONS AND CORRECTION OF ANY DISCREPANCIES NOTED IN THE INSPECTIONS SHALL BE SUBMITTED AT A POINT IN TIME AGREED UPON BY THE PERMIT APPLICANT AND THE BUILDING OFFICIAL PRIOR TO THE START OF WORK.

DESIGN DATA

CODE CONFORMANCE IS 2010 CALIFORNIA BUILDING CODE

TYPE OF CONSTRUCTION IS 1A

OCCUPANCY TYPE OF F-1

AUTOMATIC FIRE SPRINKLERS ARE PRESENT

THE BUILDING IS 4 STORY

AREA OF ROOF ALTERATION IS 120 SQ FT

THE SCOPE OF THE CONSTRUCTION SPECIFIED HEREIN CONSISTS OF THE SEISMIC ANCHORAGE AND INSTALLATION FOR GREENHECK EXHAUST FANS, STACK AND DUCTS.

PROJECT DATA

TOOL	WEIGHT
FAN WEIGHT	= 350 lbs.

EARTHQUAKE DESIGN DATA

1. Importance Factor I=1.0, Occupancy Category II.
2. Mapped Spectral Response S_S=1.839, S_1=0.951
3. Site Class D
4. Spectral Response Coefficient(s) S_{DS}=1.226, S_{D1}=0.951
5. Seismic Design Category D
6. Basic Seismic Force Resisting Element(s): Steel Bracing, Steel Brackets, Anchor Bolts.
7. Design Base Shear: Cs(W=Weight of Equipment)
8. Seismic Response Coefficient(s):
   Horizontal = .630
   Vertical = .250
9. Response Modification Factor(s):
   Equipment: Fan = 6.0, Ducts = 9
10. Analysis Procedure: Per ASCE 7-05 Section 13.3

ABBREVIATIONS

@	AT
BM.	BEAM
COL.	CENTER LINE
CONC.	CONCRETE
DBL.	DOUBLE
(E)	EXISTING
(N)	NEW
H.S.B.	HIGH STRENGTH BOLT
REQ'D.	REQUIRED
TYP.	TYPICAL
U.N.O.	UNLESS NOTED OTHERWISE

SYMBOLS

1 — SECTION LETTER OR DETAIL NUMBER
S-1.0 S-1.0 — SHEET NUMBER WHERE SECTION OR DETAIL IS SHOWN
SHEET NUMBER CURRENTLY VIEWING

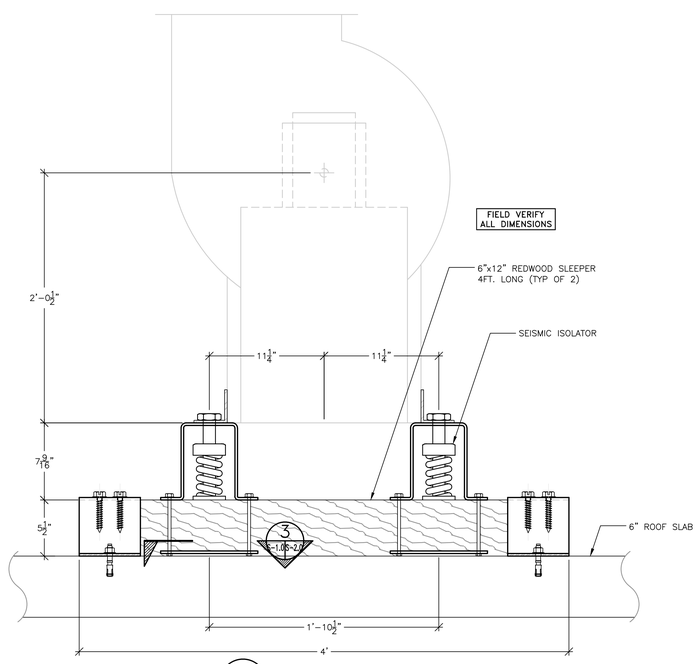

A SHORT SIDE VIEW
SCALE: NONE

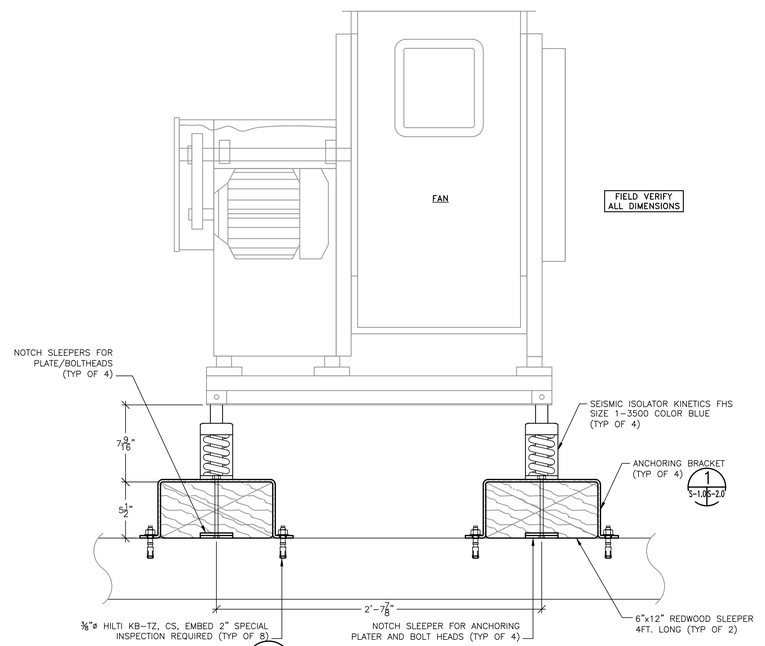

B LONG SIDE VIEW
SCALE: NONE

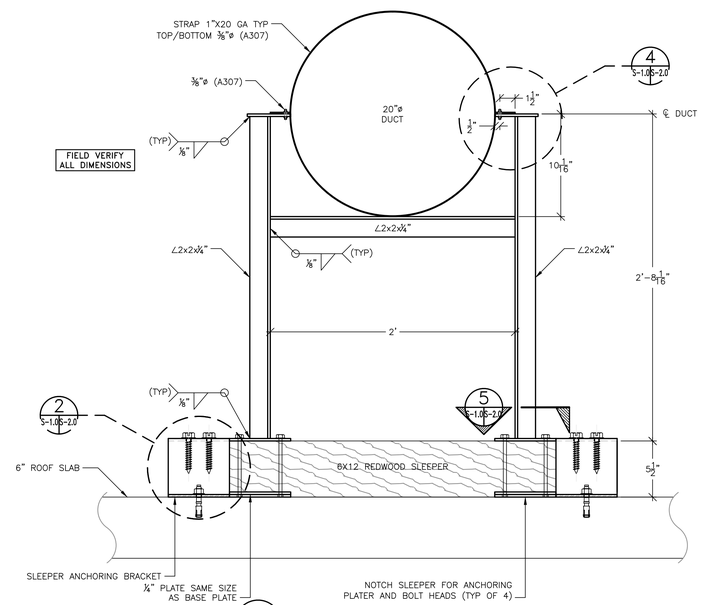

C DUCT SUPPORT CROSS SECTION
SCALE: NONE

Revisions:	Date
ISSUE FOR BID	04/17/12
ISSUE FOR 100% REVIEW	02/9/12
ISSUE FOR 95% REVIEW	12/9/11
ISSUE FOR 65% REVIEW	07/7/11
ISSUE FOR 35% REVIEW	03/24/11

CONSULTANTS:

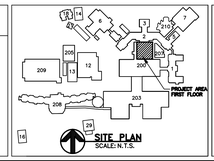

REGISTERED PROFESSIONAL ENGINEER
OSCAR A. ROCHA
No. 19911
EXP. 09/30/2013
CIVIL
STATE OF CALIFORNIA
STAMP

ARCHITECT/ENGINEERS:

ADVANCE DESIGN CONSULTANTS, INC
PROFESSIONAL ENGINEERS
998 PARK AVENUE SAN JOSE, CA 95126
(408) 297-1881 FAX: (408) 294-3186
WWW.ADCENGINEERS.COM

ATTENTION:
ONLY WET SIGNED DOCUMENTS CONSTITUTE ADVANCE DESIGN CONSULTANTS, INC. PROFESSIONAL WORK AND BECAUSE OTHER REPRODUCIBLE DOCUMENTS MAY BE EASILY ALTERED WITHOUT THE CONSENT OF ADVANCE DESIGN CONSULTANTS, INC. THE WET SIGNED DOCUMENTS SHALL GOVERN AS THE ONLY FOR THE ORIGINAL AND CORRECT INFORMATION. IF THERE ARE DIFFERENCES BETWEEN THE WET SIGNED DOCUMENTS AND ANY OTHER DOCUMENTS, THE WET SIGNED DOCUMENTS SHALL GOVERN.
ADVANCE DESIGN CONSULTANTS, INC. IS NOT RESPONSIBLE FOR ANY MODIFICATIONS MADE TO OUR DOCUMENTS BY ANYONE OTHER THAN AUTHORIZED REPRESENTATIVES OF ADVANCE DESIGN CONSULTANTS, INC.

Drawing Title:
STRUCTURAL SEISMIC ANCHOR LOCATION PLAN, DETAILS, SECTIONS AND NOTES

Approved Project Director:

Project Title:
BUILDING 200
DENTAL CLINIC

Location:
4150 CLEMENT ST. SAN FRANCISCO, CA

Date: NOVEMBER 2011
Checked: L. RIOS
Drawn: R. RIOS

Project Number: 662-11-108
Building Number: 200
Drawing Number: 200-S-40-1.0
Dwg. 14 of 44

Office of Construction and Facilities Management
Department of Veterans Affairs

VA FORM 08-6231

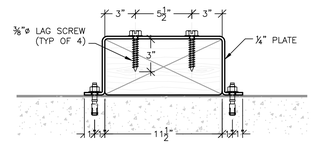

1 SLEEPER ANCHORAGE DETAIL
SCALE: NONE

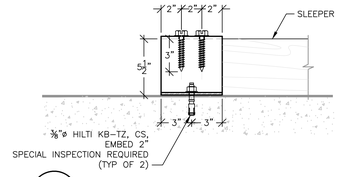

2 SLEEPER ANCHORAGE DETAIL
SCALE: NONE

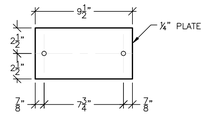

3 SEISMIC ISOLATOR ANCHORING PLATE
SCALE: NONE

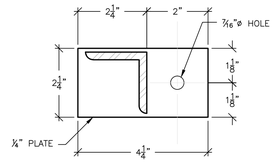

4 TOP PLATE DETAIL
SCALE: NONE

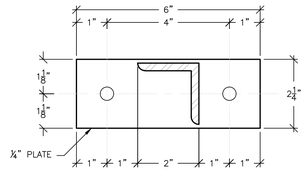

5 BASE PLATE DETAIL
SCALE: NONE

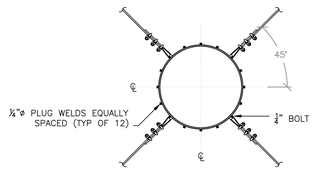

6 PLAN VIEW @ TOP OF STACK
SCALE: NONE

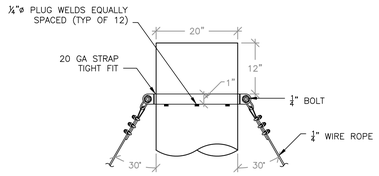

7 STACK TO GUY WIRE TOP CONNECTION
SCALE: NONE

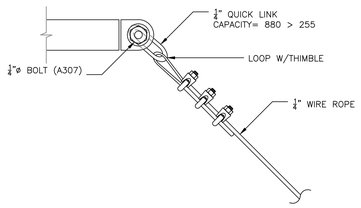

8 GUY WIRE CONNECTION
SCALE: NONE

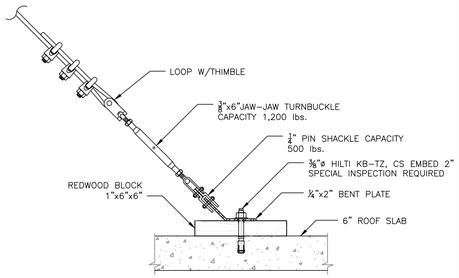

9 CONNECTION TO ROOF SLAB
SCALE: NONE

FIELD VERIFY ALL DIMENSIONS

Revisions:	Date
ISSUE FOR BID	04/17/12
ISSUE FOR 100% REVIEW	02/9/12
ISSUE FOR 95% REVIEW	12/9/11
ISSUE FOR 65% REVIEW	07/7/11
ISSUE FOR 35% REVIEW	03/24/11

CONSULTANTS:

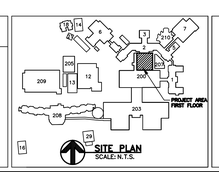

REGISTERED PROFESSIONAL ENGINEER
OSCAR A. ROCHA
No. 19911
EXP. 09/30/2013
CIVIL
STATE OF CALIFORNIA
STAMP

ARCHITECT/ENGINEERS:

ADVANCE DESIGN CONSULTANTS, INC
PROFESSIONAL ENGINEERS
998 PARK AVENUE SAN JOSE, CA 95126
(408) 297-1881 FAX: (408) 294-3186
WWW.ADCENGINEERS.COM

ATTENTION:
ONLY WET SIGNED DOCUMENTS CONSTITUTE ADVANCE DESIGN CONSULTANTS, INC. PROFESSIONAL WORK AND BECAUSE OTHER REPRODUCIBLE DOCUMENTS MAY BE EASILY ALTERED WITHOUT THE CONSENT OF ADVANCE DESIGN CONSULTANTS, INC. THE WET SIGNED DOCUMENTS SHALL BE CONSIDERED THE FOR THE ORIGINAL AND CORRECT INFORMATION. IF THERE ARE DIFFERENCES BETWEEN THE WET SIGNED DOCUMENTS AND ANY OTHER DOCUMENTS, THE WET SIGNED DOCUMENTS SHALL GOVERN.

ADVANCE DESIGN CONSULTANTS, INC. IS NOT RESPONSIBLE FOR ANY MODIFICATIONS MADE TO OUR DOCUMENTS BY ANYONE OTHER THAN AUTHORIZED REPRESENTATIVES OF ADVANCE DESIGN CONSULTANTS, INC.

Drawing Title:
STRUCTURAL SEISMIC ANCHOR DETAILS AND SECTIONS

Approved Project Director:

Project Title:
BUILDING 200
DENTAL CLINIC

Location:
4150 CLEMENT ST. SAN FRANCISCO, CA

Date: NOVEMBER 2011
Checked: L. RIOS
Drawn: R. RIOS

Project Number: 662-11-108
Building Number: 200
Drawing Number: 200-S-40-2.0
Dwg. 15 of 44

Office of Construction and Facilities Management
Department of Veterans Affairs

VA FORM 08-6231

GENERAL NOTES

1. THE COMPLETE ELECTRICAL INSTALLATION SHALL BE IN ACCORDANCE WITH THE 2008 EDITION OF THE NATIONAL ELECTRICAL CODE, THE LATEST RULES AND REGULATIONS OF THE SAFETY ORDERS ISSUED BY THE DIVISION OF INDUSTRIAL SAFETY, THE NATIONAL BOARD OF FIRE UNDERWRITERS AND ALL APPLICABLE STATE AND LOCAL CODES ISSUED BY THE AUTHORITIES HAVING JURISDICTION.
2. THE CONTRACTOR, PRIOR TO BIDDING, SHALL VISIT THE JOB SITE TO BECOME ACQUAINTED WITH THE EXISTING INSTALLATION AND SYSTEM RELATED TO HIS WORK AND SHALL INCLUDE IN THE BID PROPOSAL ALL LABOR AND MATERIALS REQUIRED FOR THE ELECTRICAL INSTALLATION TO BE COMPLETE AND OPERATIVE.
3. THE CONTRACTOR SHALL CONSULT THE ARCHITECTURAL, MECHANICAL AND OTHER DRAWINGS RELATED TO THIS PROJECT FOR ADDITIONAL WORK TO BE PROVIDED.
4. ALL FEEDER AND BRANCH CIRCUIT CONDUITS SHALL BE INSTALLED CONCEALED IN FINISHED AREA, UNLESS OTHERWISE NOTED.
5. UNLESS OTHERWISE INDICATED, THE MINIMUM SIZE OF CONDUCTORS SHALL BE #12 AWG THWN OR THHN COPPER ONLY
6. UNLESS OTHERWISE INDICATED, THE MINIMUM SIZE OF CONDUITS SHALL BE 3/4" EMT.
7. GREEN INSULATED GROUND CONDUCTORS SHALL BE INSTALLED IN ALL FEEDER AND BRANCH CIRCUIT CONDUITS.
8. THE CONTRACTOR SHALL PROVIDE REVISED TYPEWRITTEN DIRECTORIES FOR THE ELECTRICAL PANEL INVOLVED IN THIS PROJECT. THE PANEL DIRECTORY SHALL REFLECT THE AS BUILT CIRCUITS. ONE COPY OF THE SCHEDULE SHALL BE TAPED TO THE INSIDE OF THE PANEL DOOR, AND ONE COPY SHALL BE SUBMITTED TO THE COTR AS AN "AS-BUILT" DRAWING.
9. ELECTRICAL EQUIPMENT AND FEEDERS SHALL BE SUPPORTED AND/OR ANCHORED IN ACCORDANCE WITH VA SEISMIC REQUIREMENTS FOR NON-STRUCTURAL COMPONENTS.
10. THE CONTRACTOR SHALL MAINTAIN AT THE JOB SITE, AN UP TO DATE "AS-BUILT" DRAWING SET. THE "AS-BUILT" DRAWING SET SHALL REFLECT ALL APPROVED CHANGES TO THE DESIGN DRAWINGS. THE "AS-BUILT" DRAWING SET SHALL BE KEPT CLEAN AND IN GOOD CONDITION AND SHALL BE TURNED OVER TO THE COTR AT THE COMPLETION OF THE PROJECT.
11. UPON COMPLETION OF HIS WORK, THE CONTRACTOR SHALL SCHEDULE AND PERFORM A COMPLETE FUNCTIONAL TEST TO DEMONSTRATE TO THE COTR THAT THE NEW INSTALLATION IS OPERATING AS INTENDED. ANY DEFECTS OR DEFICIENCIES IN THE MATERIALS OR WORK SHALL BE CORRECTED IMMEDIATELY BY AND AT THE CONTRACTOR'S EXPENSE.
12. THE CONTRACTOR SHALL BE RESPONSIBLE FOR SECURING ALL REQUIRED ELECTRICAL PERMITS AND INSPECTIONS.
13. THE SUBMISSION OF A BID OR PROPOSAL SHALL BE CONSIDERED AS CONCLUSIVE EVIDENCE THAT THE CONTRACTOR IS THOROUGHLY FAMILIAR WITH THE INTENT OF THE CONTRACT DOCUMENT, AND NO CHANGE ORDER WILL BE ISSUED FOR ADDITIONAL LABOR OR MATERIAL REQUIRED TO RECTIFY ANY DISCREPANCY DISCOVERED OR REPORTED TO THE ENGINEER AFTER THE EXECUTION OF THE WORK.

SYMBOLS

SYMB.	DESCRIPTION
	MOLDED CASE CIRCUIT BREAKER
ST	MOLDED CASE CIRCUIT BREAKER
	TRANSFORMER
	DRY POWER TRANSFORMER
(3)	POTENTIAL TRANSFORMER (NUMBER INDICATES QUANTITY)
	NON-FUSED DISCONNECT SWITCH
F	FUSED DISCONNECT SWITCH
M	MOTOR OUTLET; "15" INDICATES 15 HORSE POWER
VFD	VARIABLE FREQUENCY DRIVE.
	CONTINUOUS GROUND BUS
	GROUND
	CHASSIS
N E	AUTOMATIC TRANSFER SWITCH
	FUSE
	NUETRAL LINK
V	VOLTMETER
A	AMMNETER
KW	KILOWATT-METER
AS	AMMETER SWITCH
VS	VOLTMETER SWITCH
G	GENERATION
	CONTROLLER
W W	WIREWAY
	DISCONNECT SWITCH, FUSED
	FOUR PORT WITH 3 MULTIPOINT DATA AND ONE TELEPHONE OUTLET J-BOX +18"AFF, WITH NYLONS PULLWIRE INTO CEILING SPACE WITH BUSHING TO THE TELEPHONE TERMINAL BOARD.
	MULTIPOINT DATA OUTLET J-BOX WITH NYLONS PULLWIRE INTO CEILING SPACE WITH BUSHING.
$2	SWITCH BLANK = SINGLE POLE 3 = THREE-WAY oc= OCCUPANCY SENSOR

SYMBOLS

SYMB.	DESCRIPTION
	NEW GFI DUPLEX RECP., 20A-125V NEMA 5-20R HUBBELL GF20IL
	FLOOR MOUNTED DUPLEX RECP., 20A-125V, NEMA 5-20R HUBBELL 5362
	CEILING MOUNTED DUPLEX RECP., 20A-125V, NEMA 5-20R HUBBELL 5362
	NEW DUPLEX RECP., 20A-125V, NEMA 5-20R HUBBELL 5362
	NEW FOURPLEX RECP., 20A-125V, NEMA 5-20R HUBBELL 5362
MOS	MULTI OUTLET STRIP
	230V / 240 VOLT RECEPTACLE
	TWIST-LOCK RECEPTACLE NEMA L14-20R, 20A,125V/250V. (HUBBELL HBL2410)
	ELECTRICAL PANEL 277/480
	ELECTRICAL PANEL 120/208, RECESED MOUTNED
	ELECTRICAL PANEL 277/480
	ELECTRICAL PANEL 277/480, RECESSED MOUNTED
	CONDUIT TURNING - UP
	CONDUIT TURNING - DOWN
	CONDUIT STUBBED AND CAPPED, LOCATION AS INDICATED
C	DUCTBANK, SITE PLAN C=CONTROL, E=EMERGENCY POWER, P=POWER, T=TELEPHONE/DATA, U-UTILITY COMPANY
	CONDUIT WITH CONDUCTORS - CONCEALED OR EXPOSED
	CONDUIT WITH CONDUCTORS - BELOW GRADE OR SLAB
E	CONDUIT AND CONDUCTORS ON EMERGENCY CIRCUIT
CO	CONDUIT ONLY
	PLUG-IN CIRUIT BREAKER ON THE BUST DUCT. SIZE AS NOTED ON THE PLAN
LP	LIGHTING PANEL
	RECEPTACLE, DUPLEX ON EMERGENCY POWER
	RECEPTACLE, SINGLE
	ELECTRICAL STRIP MOLD (OUTLETS ON 2'-0" [610mm] CENTERS OR AS DESIGNATED ON DRAWINGS), MTD 3'-6" [1067mm] AFF OR AS INDICATED.
	SEAL FITTING FOR CLASS 1, DIV 1 (SEE PLAN)
ISOLATION GND, GND, HOT WIRES, NEUTRAL	HOMERUN TO SWITCHBOARD, PANELBOARD, PANEL AND CABINET, ETC.
SP	SPEAKER
PS	PRESSURE SYSTEM
WS	WIRELESS SYSTEM
PB	PULLBOX
	SPLICE CONDUCTORS IN NEW PULLBOX.
J	CEILING MOUNTED JUNCTION BOX
J	CEILING MOUNTED JUNCTION BOX
J	FLOOR MOUNTED JUNCTION BOX
GND	GROUND BUS
C	WALL MOUNTED CLOCK

NOTE:

SYMBOLS AND ABBREVIATIONS LISTED ARE FOR GENERAL USE. DISREGARD THOSE WHICH ARE NOT USED ON THE DRAWINGS.

ABBREVIATIONS

ABBR.	DESCRIPTION
A,AMP	AMMETER, AMPERE
AC	ALTERNATING CURRENT
AF	AMPERE FRAME
AFF	ABOVE FINISHED FLOOR
AMP	AMPERES
AT	AMPERE TRIP
AWG	AMERICAN WIRE GAUGE
BRKR	BREAKER
BLDG	BUILDING
C	CONDUIT, COIL
CB	CIRCUIT BREAKER
CKT	CIRCUIT
CRS	COATED RIGID STEEL
Δ	DELTA CONNECTED
E	EMPTY, EMERGENCY
(E)	EXISTING
EMT	ELECTRICAL METALLIC TUBING
ENT	ELECTRICAL NONMETALLIC TUBING
EV	ELECTRIC VEHICLE
F	FUSE
(F)	FUTURE
FDR	FEEDER
FLR	FLOOR
FU	FUSE
(G), GND	GROUND
GFCI	GROUND FAULT CIRCUIT INTERRUPTER
GRC	GALVANIZED RIGID CONDUIT
HOA	HAND-OFF-AUTO
IMC	INTERMEDIATE METALLIC CONDUIT
IG	ISOLATED GROUND
JB, J-BOX	JUNCTION BOX
KA	KILOAMPERE
KVA	KILOVOLT-AMPERE
KVAR	KILOVOLT-AMPER REACTIVE
KW	KILOWATT
KWH	KILOWATT HOUR
MCB	MAIN CIRCUIT BREAKER
MFR	MANUFACTURER
MLO	MAIN LUGS ONLY
MT, MTD	MOUNT, MOUNTED
(N)	NEW
N	NEUTRAL
NEC	NATIONAL ELECTRIC CODE
NEMA	NATIONAL ELECTRICAL MANUFACTURER'S ASSOCIATION
NFPA	NATIONAL FIRE PROTECTION ASSOCIATION
NIC	NOT IN CONTRACT
NTS	NOT TO SCALE
PNL	PANEL
PH	PHASE
QTY	QUANTITY
RCPT, RECP	RECEPTACLE
RQD	REQUIRED
SURF	SURFACE
SS	STAINLESS STEEL
SWBD	SWITCHBOARD
T	TRANSFORMER
TP, 3P	THREE POLE
TYP	TYPICAL
V	VOLTMETER, VOLT
VA	VOLT-AMPERE
W	WATT, WIRE
WH	WATT-HOUR METER
WP	WEATHERPROOF
XFMR	TRANSFORMER
Y	WYE CONNECTED
Ø	PHASE

LIGHT FIXTURE SCHEDULE

TYPE	MANUFACTURER AND CATALOG NUMBER	LAMPS QTY.	LAMPS LAMP TYPE	WATTS	VOLT	MOUNTING	DESCRIPTION AND REMARKS
A	COLUMBIA LIGHTING CAT# 4PS24332GFSA12EU277SLL.	3	F32T8/TL835 3500K PHILIPS	86	277	RECESSED IN GRID CEILING	2'x4' "4PS24" SERIES FLUORESCENT LIGHT FIXTURE DIRECT-INDIRECT. MITERED CORNER STANDARD FLUSH DOOR IS FORMED STEEL, WITH HINGE FROM EITHER SIDE.
B	COLUMBIA LIGHTING CAT# 4PS24432GFSA12EU277SLL.	4	F32T8/TL835 3500K PHILIPS	106	277	RECESSED IN GRID CEILING	2'x4' "4PS24" SERIES FLUORESCENT LIGHT FIXTURE WITH ACRYLIC PRISMATIC LENS. MITERED CORNER STANDARD FLUSH DOOR IS FORMED STEEL, WITH HINGE FROM EITHER SIDE. PROVIDE ELECTRONIC BALLAST.
C	COLUMBIA LIGHTING CAT# 4PS24232GFSA12EU277SLL.	2	F32T8/TL835 3500K PHILIPS	59	277	RECESSED IN GRID CEILING	2'x4' "4PS24" SERIES FLUORESCENT LIGHT FIXTURE WITH ACRYLIC PRISMATIC LENS. MITERED CORNER STANDARD FLUSH DOOR IS FORMED STEEL, WITH HINGE FROM EITHER SIDE.
D	LSI INDUSTRIES PEAK EFFICIENCY CAT# 2PECG232RPWSS010UE.	2	F32T8/TL835 3500K PHILIPS	59	277	RECESSED IN GRID CEILING	PEAK EFFICIENCY RECESSED DIRECT/INDIRECT FLUORESCENT LIGHT FIXTURE WITH BALANCED ILLUMINATION AND SUPERIOR ANGLE BRIGHTNESS CONTROL. CURVED METAL SHIELD WITH PERFORATED, ROUND HOLES ELIMINATE GLARE AND VEILING REFLECTIONS DIRECTLY BELOW FIXTURE.MATTE WHITE REFLECTORS FOR SOFT INDIRECT LIGHT DISTRIBUTION HOUSING END SECTION DIE-FORMED COLD ROLLED STEEL. PROVIDE ELECTRONIC BALLAST.
E	LIGHTOLIER LIGHTING CAT# PTS8-1-0-2-4.	1	F32T8/TL835 3500K PHILIPS	32	277	RECESSED MOUNTED	1'x4' PERIMETER TROUGH RECESSED FLUORESCENT LIGHT FIXTURE HEAVY GAUGE BULK HEADS SUPPORT HOUSING. CROSS-SECTIONAL 1 LINEAR T-8 FLUORESCENT LAMP WITH ELECTRONIC BALLAST.
X	"DUAL LITE" CAT # LEC DOCWA OR APPROVED EQUAL	1	LIGHT EMITTING DIODE	4.4	277	CEILING MOUNTED	ILLUMINATED EXIT SIGN, DUBLE FACE GREEN LETTERS ON WHITE STENCIL BACKGROUND.
X1	"DUAL LITE" CAT # LEW SGWA OR APPROVED EQUAL	1	LIGHT EMITTING DIODE	2.5	277	WALL MOUNTED 8'-6" AFF OR ABOVE DOOR HEAD	ILLUMINATED EXIT SIGN, SINGLE FACE GREEN LETTERS ON WHITE STENCIL BACKGROUND.

Revisions:	Date
ISSUE FOR BID	04/17/12
ISSUE FOR 100% REVIEW	02/9/12
ISSUE FOR 95% REVIEW	12/9/11
ISSUE FOR 65% REVIEW	07/7/11
ISSUE FOR 35% REVIEW	03/24/11

CONSULTANTS:

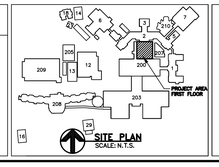

REGISTERED PROFESSIONAL ENGINEER LORENZO A. RIOS CAELLEN NO. E 10342 EXP. 06/30/2013 ELECTRICAL STATE OF CALIFORNIA

STAMP

ARCHITECT/ENGINEERS:

ADVANCE DESIGN CONSULTANTS, INC
PROFESSIONAL ENGINEERS

998 PARK AVENUE SAN JOSE, CA 95126
(408) 297-1881 FAX: (408) 294-3186

WWW.ADCENGINEERS.COM

ATTENTION:

ONLY WET SIGNED DOCUMENTS CONSTITUTE ADVANCE DESIGN CONSULTANTS, INC. PROFESSIONAL WORK AND BECAUSE OTHER REPRODUCIBLE DOCUMENTS MAY BE EASILY ALTERED WITHOUT THE CONSENT OF ADVANCE DESIGN CONSULTANTS, INC., THE WET SIGNED DOCUMENTS MUST BE REFERRED TO FOR THE ORIGINAL AND CORRECT INFORMATION. IF THERE ANY DIFFERENCES BETWEEN THE WET SIGNED DOCUMENTS AND ANY OTHER DOCUMENTS, THE WET SIGNED DOCUMENTS SHALL GOVERN.

ADVANCE DESIGN CONSULTANTS, INC. IS NOT RESPONSIBLE FOR ANY MODIFICATIONS MADE TO OUR DOCUMENTS BY ANYONE OTHER THAN AUTHORIZED REPRESENTATIVES OF ADVANCE DESIGN CONSULTANTS, INC.

Drawing Title: ELECTRICAL GENERAL NOTES, SYMBOL, ABBREV, AND FIXTURE SCHEDULE

Approved Project Director:

Project Title: BUILDING 200 DENTAL CLINIC

Location: 4150 CLEMENT ST. SAN FRANCISCO, CA

Date: NOVEMBER 2011 | Checked: P LOPEZ | Drawn: M.CUELLAR

Project Number: 662-11-108

Building Number: 200

Drawing Number: 200-E-60-0.0

Dwg. 16 of 44

Office of Construction and Facilities Management

Department of Veterans Affairs

VA FORM 08-6231

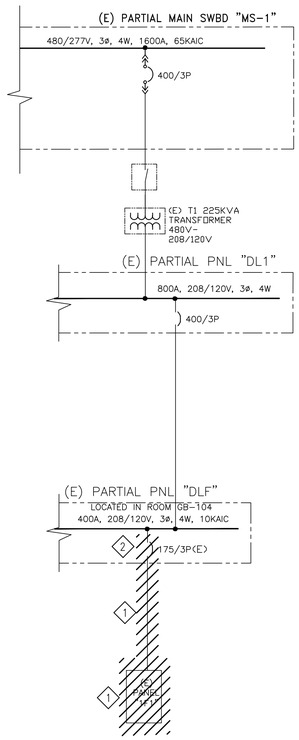

(E) PARTIAL ONE LINE DIAGRAM–DEMOLITION
SCALE: N.T.S.

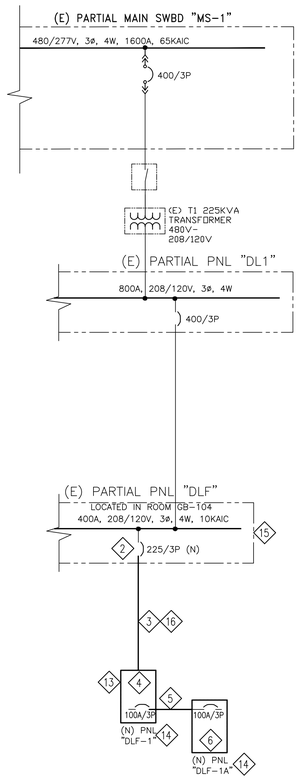

(E) PARTIAL ONE LINE DIAGRAM–NEW WORK
SCALE: N.T.S.

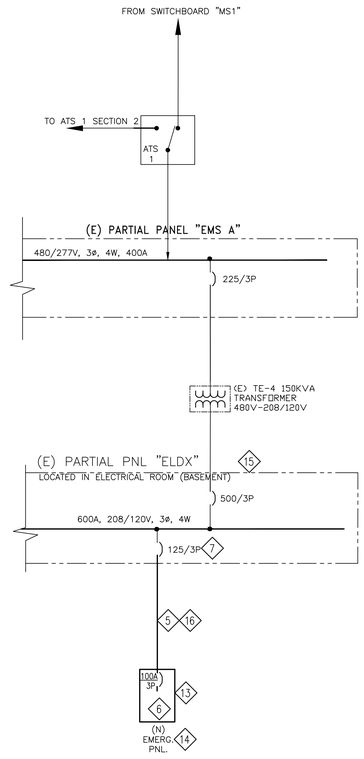

(E) PARTIAL EMERGENCY ONE LINE DIAGRAM–NEW WORK
SCALE: N.T.S.

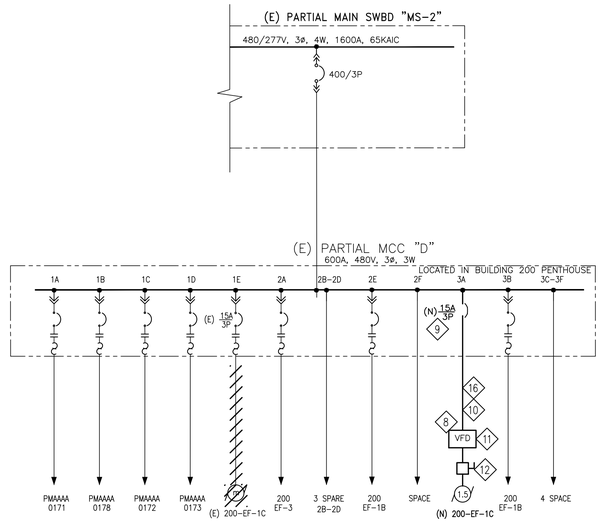

(E) PARTIAL MCC "D" ONE LINE DIAGRAM
SCALE: N.T.S.

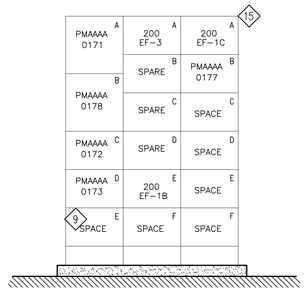

(E) PARTIAL MCC "D" FRONT ELEVATION

SHEET NOTES:

1. CONTRACTOR SHALL DISCONNECT AND REMOVE (E) FEEDER BRANCH, CONDUIT, WIRES AND PANELS.
2. CONTRACTOR SHALL REPLACE (E) 175A/3P CIRCUIT BREAKER IN PANEL "DLF" WITH A NEW 225A/3P CIRCUIT BREAKER TO PROVIDE POWER TO (N) PANEL "DLF 1". NEW CIRCUIT BREAKER TYPE AND INTERRUPTING RATING SHALL MATCH EXISTING.
3. CONTRACTOR SHALL PROVIDE AND INSTALL 2½"C WITH 4 #4/0 & 1 #4 (G).
4. CONTRACTOR SHALL PROVIDE AND INSTALL NEW 225A, 120/208V. 3 PHASE, 4 WIRE, 42 POLE PANELBOARD. NEW PANELBOARD SHALL BE FLUSHED MOUNTED, ALL BUS BAR SHALL BE COPPER, FRONT COVER PLATE SHALL BE HINGED. NEW PANELBOARD SHALL BE FURNISHED MLO ONLY.
5. CONTRACTOR SHALL PROVIDE AND INSTALL 1 1/2"C WITH 4 #1AWG & 1 #6 (G)
6. CONTRACTOR SHALL PROVIDE AND INSTALL NEW 125A, 120/208V. 3 PHASE, 4 WIRE, 42 POLE PANELBOARD WITH 100A/3P MAIN CIRCUIT BREAKER. NEW PANELBOARD SHALL BE FLUSHED MOUNTED, ALL BUS BAR SHALL BE COPPER, FRONT COVER PLATE SHALL BE HINGED. NEW PANELBOARD.
7. CONTRACTOR SHALL PROVIDE AND INSTALL (N) 125A/3P, 208V CIRCUIT BREAKER IN SPACE OF EXISTING PANEL "ELDX" TO PROVIDE POWER TO (N) EMERGENCY PANEL, NEW CIRCUIT BREAKER TYPE AND INTERRUPTING RATING SHALL MATCH EXISTING.
8. CONTRACTOR SHALL DISCONNECT AND REMOVE EXISTING CONDUIT AND WIRES SHOWN IN HASH LINES FROM EXISTING MCC–D LOCATE AT PENTHOUSE WHICH IS FEEDING (E) EXHAUST FAN 200–EF–1C. (E) CIRCUIT BREAKER AND MAGNETIC STARTER TO REMAIN FOR REUSE.
9. CONTRACTOR SHALL PROVIDE AND INSTALL A MCC BUCKET, FACTORY ASSEMBLED WITH 15A/3P, 480V, 65KAIC, CIRCUIT BREAKER TO INSTALL IN EXISTING SPACE OF THE MCC "D". TO PROVIDE POWER TO NEW EXHAUST FAN "200–EF–1C".
10. CONTRACTOR SHALL PROVIDE AND INSTALL 3/4"C, 3 #12AWG AND 1 #12 (G).
11. CONTRACTOR SHALL PROVIDE AND INSTALL NEW VARIABLE FREQUENCY DRIVE IN A NEMA 1 ENCLOSURE, RATED IN ACCORDANCE WITH THE MOTOR HORSEPOWER AS INDICATED.
12. CONTRACTOR SHALL PROVIDE AND INSTALL A NEW 30A, 600V, 3 POLE HEAVY DUTY SAFETY DISCONNECT SWITCH IN NEMA 3R.
13. CONTRACTOR SHALL ENSURE THAT THE DURING THE DEMOLITION PHASES OF THE PROJECT THEY SHALL MAINTAIN POWER/LIGHTING OPERATIONAL TO SPACES PROPOSED TO BE IN USE DURING THE CONSTRUCTION. THEY SHALL AVOID INTERRUPTING SERVICES STILL USE WHEN DEMOLITION LIVE ELECTRICAL CIRCUITS. ANY SHUT–DOWN OF BREAKERS, CIRCUITS OR PANELS SHALL BE PERFORMED AT THE COMMENCE OF THE OPERATIONAL SPACE USERS. COORDINATE WITH THE COTR ANY POWER SHUTDOWN. A SHUTDOWN SCHEDULE SHALL BE PRESENTED TO THE COTR APPROVAL TWO WEEKS PRIOR TO COMMENCEMENT OF WORK.
14. CONTRACTOR SHALL LABEL IN THE FIELD ALL POWER CIRCUITS AS:
    DLF–1 AS 2001B–NLP01
    DLF–1A AS 2001B–NLP02
    EMERGENCY PANEL AS 2001B–ELP01.
    TO COMPLY WITH THE VA REQUIREMENTS.
15. CONTRACTOR SHALL FIELD VERIFY LOCATION OF PNL "DLF", PNL "ELDX" AND MCC "D" PRIOR TO SUBMITTING A BID.
16. CONTRACTOR SHALL FIELD DETAIL AND CALCULATE CONDUIT LENGTH FROM (E) PANELS AND (N) SUBPANEL AND FROM MCC AND VFD.

Revisions:	Date
ISSUE FOR BID	04/17/12
ISSUE FOR 100% REVIEW	02/9/12
ISSUE FOR 95% REVIEW	12/9/11
ISSUE FOR 65% REVIEW	07/7/11
ISSUE FOR 35% REVIEW	03/24/11

CONSULTANTS:

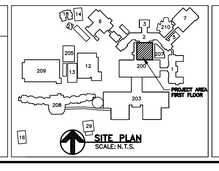

REGISTERED PROFESSIONAL ENGINEER
LORENZO A. RIOS CASTILLON
NO. E 10342
EXP. 06/30/2012
ELECTRICAL
STATE OF CALIFORNIA
STAMP

ARCHITECT/ENGINEERS:

ADVANCE DESIGN CONSULTANTS, INC
PROFESSIONAL ENGINEERS
998 PARK AVENUE SAN JOSE, CA 95126
(408) 297–1881 FAX: (408) 294–3186
WWW.ADCENGINEERS.COM

ATTENTION:
ONLY WET SIGNED DOCUMENTS CONSTITUTE ADVANCE DESIGN CONSULTANTS, INC. PROFESSIONAL WORK AND BECAUSE OTHER REPRODUCIBLE DOCUMENTS MAY BE EASILY ALTERED WITHOUT THE CONSENT OF ADVANCE DESIGN CONSULTANTS, INC., THE WET SIGNED DOCUMENTS MUST BE REFERRED TO FOR THE ORIGINAL AND CORRECT INFORMATION. IF THERE ANY DIFFERENCES BETWEEN THE WET SIGNED DOCUMENTS AND ANY OTHER DOCUMENTS, THE WET SIGNED DOCUMENTS SHALL GOVERN.
ADVANCE DESIGN CONSULTANTS, INC. IS NOT RESPONSIBLE FOR ANY MODIFICATIONS MADE TO OUR DOCUMENTS BY ANYONE OTHER THAN AUTHORIZED REPRESENTATIVES OF ADVANCE DESIGN CONSULTANTS, INC.

Drawing Title:
ELECTRICAL
EXISTING ONE LINE DIAGRAM
AND MCC ELEVATION

Approved Project Director:

Project Title:
BUILDING 200
DENTAL CLINIC

Location:
4150 CLEMENT ST. SAN FRANCISCO, CA

Date: NOVEMBER 2011
Checked: P LOPEZ
Drawn: M.CUELLAR

Project Number: 662-11-108
Building Number: 200
Drawing Number: 200-E-60-0.1
Dwg. 17 of 44

Office of Construction and Facilities Management
Department of Veterans Affairs

VA FORM 08-6231

ENCLOSURE NEMA 1 , 120/208 VOLT, 3 PHASE , 4 WIRE
MOUNTING SURFACE , INTERRUPTING DUTY BREAKER 10K A., MLO A. MAIN BREAKER 225 A. BUS

DESCRIPTION	LOAD – VA A	B	C	BKR. POLE	CKT NO.	PHASE A B C	CKT NO.	BKR. POLE	LOAD – VA A	B	C	DESCRIPTION
EXISTING				20 1P	1		2	20 1P				EXISTING
EXISTING				20 1P	3		4	20 1P				EXISTING
EXISTING				20 1P	5		6	20 1P				EXISTING
EXISTING				20 1P	7		8	20 1P				EXISTING
EXISTING				20 1P	9		10	20 1P				EXISTING
EXISTING				20 1P	11		12	20 1P				RM 124
EXISTING				20 1P	13		14	20 1P				124 LAB
EXISTING				20 1P	15		16	20 1P				124 LAB
EXISTING				20 1P	17		18	20 1P				124 LAB
SPACE				20 1P	19		20	20 1P				EXISTING
TANK 1B–124 – 200				20 1P	21		22	20 1P				EXISTING
EXISTING				20 1P	23		24	20 1P				EXISTING
LAB R–124				20 1P	25		26	20 1P				EXISTING
EXISTING				20 1P	27		28	20 1P				RM–124
EXISTING				20 1P	29		30	20 1P				EXISTING
EXISTING				20 1P	31		32	20 1P				RM–125
X–RAY				20 1P	33		34	20 1P				EXISTING
EXISTING				20 1P	35		36	20 1P				EXISTING
EXISTING				20 1P	37		38	20 1P				SPACE
EXISTING				20 1P	39		40	20 1P				SPACE
SPACE					41		42	20 1P				SPACE

TOTAL: KVA. (E) PANEL 1F1 (SECTION 1) FEEDER SIZE:

ENCLOSURE NEMA 1 , 120/208 VOLT, 3 PHASE , 4 WIRE
MOUNTING SURFACE , INTERRUPTING DUTY BREAKER A., – A. MAIN BREAKER 400 A. BUS

DESCRIPTION	LOAD – VA A	B	C	BKR. POLE	CKT NO.	PHASE A B C	CKT NO.	BKR. POLE	LOAD – VA A	B	C	DESCRIPTION
EXISTING				20 1P	43		44	20 1P				EXISTING
EXISTING				20 1P	45		46	20 1P				EXISTING
EXISTING				20 1P	47		48	20 1P				EXISTING
EXISTING				20 1P	49		50	20 1P				EXISTING
EXISTING				20 1P	51		52	20 1P				EXISTING
EXISTING				20 1P	53		54	20 1P				EXISTING
EXISTING				20 1P	55		56	20 1P				EXISTING
EXISTING				20 1P	57		58	20 1P				EXISTING
EXISTING				20 1P	59		60	20 1P				EXISTING
EXISTING				20 1P	61		62	20 1P				EXISTING
EXISTING				20 1P	63		64	20 1P				EXISTING
EXISTING				20 1P	65		66	20 1P				EXISTING
EXISTING				20 1P	67		68	20 1P				EXISTING
EXISTING				20 1P	69		70	20 1P				EXISTING
EXISTING				20 1P	71		72	20 1P				EXISTING
EXISTING				20 1P	73		74	20 1P				EXISTING
EXISTING				20 1P	75		76	20 1P				EXISTING
EXISTING				20 1P	77		78	20 1P				EXISTING
EXISTING				20 1P	79		80	20 1P				EXISTING
EXISTING				20 1P	81		82	20 1P				EXISTING
SPACE					83		84	20 1P				EXISTING

TOTAL: KVA. (E) PANEL "1F2" (SECTION 2) FEEDER SIZE:

SHEET NOTES

1. CONTRACTOR SHALL LABEL IN THE FIELD ALL POWER CIRCUITS AS:
   DLF–1 AS 2001B–NLP01
   DLF–1A AS 2001B–NLP02
   EMERGENCY PANEL AS 2001B–ELP01.
   TO COMPLY WITH THE VA REQUIREMENTS.

ENCLOSURE NEMA 1 , 480/277 VOLT, 3 PHASE , 4 WIRE
MOUNTING SURFACE , INTERRUPTING DUTY BREAKER A., MLO A. MAIN BREAKER 225 A. BUS

DESCRIPTION	LOAD – VA A	B	C	BKR. POLE	CKT NO.	PHASE A B C	CKT NO.	BKR. POLE	LOAD – VA A	B	C	DESCRIPTION
LIGHTS S/W EXAM ROOMS				20 1P	1		2	20 1P				LIGHTS WAITING ROOM,RECEPTION, OFFICES
LIGHTS S/W CORR. & ELEV. LOBBY				20 1P	3		4	20 1P				LIGHTS ELEV. LOBBY & CORRIDOR E
LIGHTS S/W–C EXAM ROOMS				20 1P	5		6	20 1P				LIGHTS INTERIOR OFFICES E
LIGHTS S/W WAITING ROOMS				20 1P	7		8	20 1P				A170A STAFF WM,A171A STAFF MEN, A172A
LIGHTS S/W EXAM ROOMS				20 1P	9		10	20 1P				SPARE
LIGHTS A–122				20 1P	11		12	20 1P				LIGHTS COMPUTER ROOM
LIGHTS A–122				20 1P	13		14	20 1P				LIGHTS NORTH
SPARE				20 1P	15		16	20 1P				LIGHTS NORTH
SPARE				20 1P	17		18	20 1P				LIGHTS NORTH
SPARE				20 1P	19		20	20 1P				LIGHTS NORTH
SPARE				20 1P	21		22	20 1P				LIGHTS NORTH
SPARE				20 1P	23		24	20 1P				LIGHTS NORTH HALL SERV. ELEV. SWITCH
SPARE				20 1P	25		26	20 1P				LIGHTS PERIMETER N & NE
SPARE				20 1P	27		28	20 1P				LIGHTS PERIMETER SE
SPARE				20 1P	29		30	20 1P				SPARE

TOTAL: KVA. (E) PANEL H1 FED FROM "DH1" LOCATED AT B–200 ROOM 1A–177

ENCLOSURE NEMA 1 120/208 VOLT, 3 PHASE, 4 WIRE
MOUNTING SURFACE, INTERRUPTING DUTY BREAKER AMPS 225 AMPS MAIN BREAKER 225 AMPS. BUS

DESCRIPTION	LOAD – VA A	B	C	BKR POLE	CKT No.	PHASE A B C	CKT. No.	BKR. POLE	LOAD – VA A	B	C	DESCRIPTION
REC RM 1B–124A,126,127,127A,128A	1080			20 1	1		2	20 1	1200			X–RAY DENT. EQUIP RM 1B–129A,129B
REC RM 1B–124A,126,127,127A,128A		1080		20 1	3		4	20 1		1200		X–RAY DENT. EQUIP RM 1B–128A,128B
DENTAL CHAIR RM 1B–129B			1200	20 1	5		6	20 1			1200	X–RAY DENT. EQUIP RM 1B–127,127A
DENTAL CHAIR RM 1B–129A	1200			20 1	7		8	20 1	1200			X–RAY DENT. EQUIP RM 1B–126
DENTAL CHAIR RM 1B–128B		1200		20 1	9		10	20 1		1200		X–RAY DENT. EQ. RM 1B–122,122A
DENTAL CHAIR RM 1B–128A			1200	20 1	11		12	20 1			1200	X–RAY DENT. EQUIP RM 1B–117,119
DENTAL CHAIR RM 1B–127A	1200			20 1	13		14	20 1	1200			X–RAY DENT. EQUIP RM 1B–118, 120
DENTAL CHAIR RM 1B–127		1200		20 1	15		16	20 1		1200		X–RAY DENT. EQUIP RM 1B–121,123
DENTAL CHAIR RM 1B–126			1200	20 1	17		18	20 1			900	REC. RM 1B–110,124,130,129,121A
DENTAL CHAIR RM 1B–122A	1200			20 1	19		20	20 1	900			REC. RM 1B–110,124,130,129,121A
DENTAL CHAIR RM 1B–122		1200		20 1	21		22	20 1		1080		RECEPT. RM 1B–128B,129A,129B
DENTAL CHAIR RM 1B–119			1200	20 1	23		24	20 1			720	RECEPT. RM 1B–118,120,121,123
DENTAL CHAIR RM 1B–117	1200			20 1	25		26	20 1	900			RECEPT. ABOVE CEILING RM 1B–117
DENTAL CHAIR RM 1B–118		1200		20 1	27		28	20 1				SPARE
DENTAL CHAIR RM 1B–120			1200	20 1	29		30	20 1				SPARE
DENTAL CHAIR RM 1B–121	1200			20 1	31		32	20 1				SPARE
DENTAL CHAIR RM 1B–123		1200		20 1	33		34	20 1				SPARE
X–RAY DENT. EQUIP RM 1B–110			1200	20 1	35		36	20 1				SPARE
X–RAY DENT. EQUIP RM 1B–124,1B–130	1200			20 1	37		38	100 3P	9707			(N) PANEL "DLF 1A"
X–RAY DENT. EQUIP RM 1B–129		1200		20 1	39		40			9707		
X–RAY DENT. EQUIP RM 1B–124A			1200	20 1	41		42				9707	
	8280	8280	8400						15107	14387	13727	

TOTAL 68.18 KVA. (N) PANEL "DLF 1" 1 FEEDER SIZE: _____

ENCLOSURE NEMA 1 120/208 VOLT, 3 PHASE, 4 WIRE
MOUNTING SURFACE, INTERRUPTING DUTY BREAKER AMPS 100 AMPS MAIN BREAKER 125 AMPS. BUS

DESCRIPTION	LOAD – VA A	B	C	BKR POLE	CKT No.	PHASE A B C	CKT. No.	BKR. POLE	LOAD – VA A	B	C	DESCRIPTION
DENTAL CHAIR RM 1B–110	1200			20 1	1		2	20 1	540			RECEPT. RM 1B–108,1B–111
DENTAL CHAIR RM 1B–124		1200		20 1	3		4	20 1		360		RECEPT. RM 1B–108,1B–111
DENTAL CHAIR RM 1B–130			1200	20 1	5		6	20 1			720	REC. CLEAN LAB RM 1B–128,131A
RECEPT. RM 1B–122, 1B–122A	1080			20 1	7		8	20 1	720			REC. CLEAN LAB RM 1B–128,131A
RECEPT. RM 1B–117, 1B–119		1080		20 1	9		10	20 1		1440		BENCH WM DENTAL LAB. RM 1B–135
RECEPT. RM 1B–118,120,121,123			1080	20 1	11		12	20 1			1440	BENCH WM DENTAL LAB. RM 1B–135
RECEPT. RM 1B–118,120,121,123	1260			20 1	13		14	20 1	1440			BENCH WM DENTAL LAB. RM 1B–135
RECEPTACLE LAB ROOM 1B–135		360		20 1	15		16	20 1		1440		BENCH WM DENTAL LAB. RM 1B–135
RECEPTACLE LAB ROOM 1B–135			720	20 1	17		18	20 1			720	REC. RM 1B–117,119,122,122A
RECEPTACLE LAB ROOM 1B–135	360			20 1	19		20	20 1	720			REC. RM 1B–126,127,127A,128A
RECEPTACLE LAB ROOM 1B–135		1080		20 1	21		22	20 1		540		REC. RM 1B–128B,129A,1229B
FUME HOOD REC. LAB RM 1B–135			600	20 1	23		24	20 1			540	RECEPT. RM 1B–110,124,130
RECEPTACLE LAB ROOM 1B–135	360			20 1	25		26	20 1	720			REC. RM 1B–118,120,121,123
RECEPTACLE LAB ROOM 1B–135		540		20 1	27		28	20 1		400		CLOCK CIRCUIT
RECEPTACLE LAB ROOM 1B–135			360	20 1	29		30	20 1			360	PNEUMATIC PUMP STATION
BENCH WM LAB ROOM 1B–135	720			20 1	31		32	20 1	360			RECEPTACLE LAB ROOM 1B–135
BENCH WM LAB ROOM 1B–135		720		20 1	33		34	20 1		360		RECEPTACLE LAB ROOM 1B–135
REFRIGERATOR RM 1B–124A			1000	20 1	35		36	20 1			360	RECEPTACLE LAB ROOM 1B–135
REC. LAB ROOM 1B–118	600			20 1	37		38	20 1	180			RECEPTACLE LAB ROOM 1B–135
SPARE				20 1	39		40	20 1		360		RECEPTACLE LAB ROOM 1B–135
SPARE				20 1	41		42	20 1			600	FUME HOOD REC. LAB RM 1B–135
	5580	4980	4960						4680	4900	4020	

TOTAL 29.12 KVA. (N) PANEL "DLF 1A" 1 FEEDER SIZE: _____

ENCLOSURE NEMA 1 120/208 VOLT, 3 PHASE, 4 WIRE
MOUNTING SURFACE, INTERRUPTING DUTY BREAKER AMPS 100 AMPS MAIN BREAKER 125 AMPS. BUS

DESCRIPTION	LOAD – VA A	B	C	BKR POLE	CKT No.	PHASE A B C	CKT. No.	BKR. POLE	LOAD – VA A	B	C	DESCRIPTION
RECEPT. RM 1B–109	360			20 1	1		2	20 1	1440			TRACK LT RM 1B–119,122,122A,126,127
RECEPT. RM 1B–109		180		20 1	3		4	20 1		1200		TRACK LT RM 1B–118,120,121,123,127A
REFRIGERATOR RECEPT. RM 1B–109			1000	20 1	5		6	20 1			1680	TRACK LT RM 1B–110,124,130,128AB,129AB
RECEPT. RM 1B–124 & 1B–130	360			20 1	7		8	20 1				SPARE
RECEPT. RM 1B–121 & 1B–123		360		20 1	9		10	20 1				SPARE
RECEPT. RM 1B–110, 118, 120			540	20 1	11		12	20 1				SPARE
RECEPT. RM 1B–117 & 1B–119	360			20 1	13		14	20 1				SPARE
RECEPT. RM 1B–122 & 1B–122A		360		20 1	15		16	20 1				SPARE
RECEPT. RM 1B–126			180	20 1	17		18	20 1				SPARE
RECEPT. RM 1B–127,1B–127A	360			20 1	19		20	20 1				SPARE
RECEPT. RM 1B–128A,1B–128B		360		20 1	21		22	20 1				SPARE
RECEPT. RM 1B–129A,1B–129B			360	20 1	23		24	20 1				SPARE
RECEPT. RM 1B–120A	360			20 1	25		26	20 1				SPARE
SPARE				20 1	27		28					SPACE
SPARE				20 1	29		30					SPACE
SPARE				20 1	31		32					SPACE
SPARE				20 1	33		34					SPACE
SPARE				20 1	35		36					SPACE
SPARE				20 1	37		38					SPACE
SPARE				20 1	39		40					SPACE
SPARE				20 1	41		42					SPACE
	1800	1260	2080						1440	1200	1680	

TOTAL 9.46 KVA. (N) EMERGENCY PANEL 1 FEEDER SIZE: _____

Revisions:	Date
ISSUE FOR BID	04/17/12
ISSUE FOR 100% REVIEW	02/9/12
ISSUE FOR 95% REVIEW	12/9/11
ISSUE FOR 65% REVIEW	07/7/11
ISSUE FOR 35% REVIEW	03/24/11

CONSULTANTS:

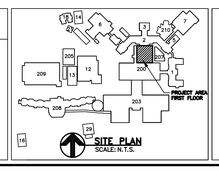

SITE PLAN
SCALE: N.T.S.

STAMP

ARCHITECT/ENGINEERS:
ADVANCE DESIGN CONSULTANTS, INC
PROFESSIONAL ENGINEERS
998 PARK AVENUE SAN JOSE, CA 95126
(408) 297–1881 FAX: (408) 294–3186
WWW.ADCENGINEERS.COM

ATTENTION:
ONLY WET SIGNED DOCUMENTS CONSTITUTE ADVANCE DESIGN CONSULTANTS, INC. PROFESSIONAL WORK AND BECAUSE OTHER REPRODUCIBLE DOCUMENTS MAY BE EASILY ALTERED WITHOUT THE CONSENT OF ADVANCE DESIGN CONSULTANTS, INC., THE WET SIGNED DOCUMENTS MUST BE REFERRED TO FOR THE ORIGINAL AND CORRECT INFORMATION. IF THERE ANY DIFFERENCES BETWEEN THE WET SIGNED DOCUMENTS AND ANY OTHER DOCUMENTS, THE WET SIGNED DOCUMENTS SHALL GOVERN.
ADVANCE DESIGN CONSULTANTS, INC. IS NOT RESPONSIBLE FOR ANY MODIFICATIONS MADE TO OUR DOCUMENTS BY ANYONE OTHER THAN AUTHORIZED REPRESENTATIVES OF ADVANCE DESIGN CONSULTANTS, INC.

Drawing Title: ELECTRICAL PANEL SCHEDULES
Approved Project Director:
Project Title: BUILDING 200 DENTAL CLINIC
Location: 4150 CLEMENT ST. SAN FRANCISCO, CA
Date: NOVEMBER 2011 | Checked: P LOPEZ | Drawn: M.CUELLAR
Project Number: 662-11-108
Building Number: 200
Drawing Number: 200-E-60-0.2
Dwg. 18 of 44

Office of Construction and Facilities Management
Department of Veterans Affairs

VA FORM 08–6231

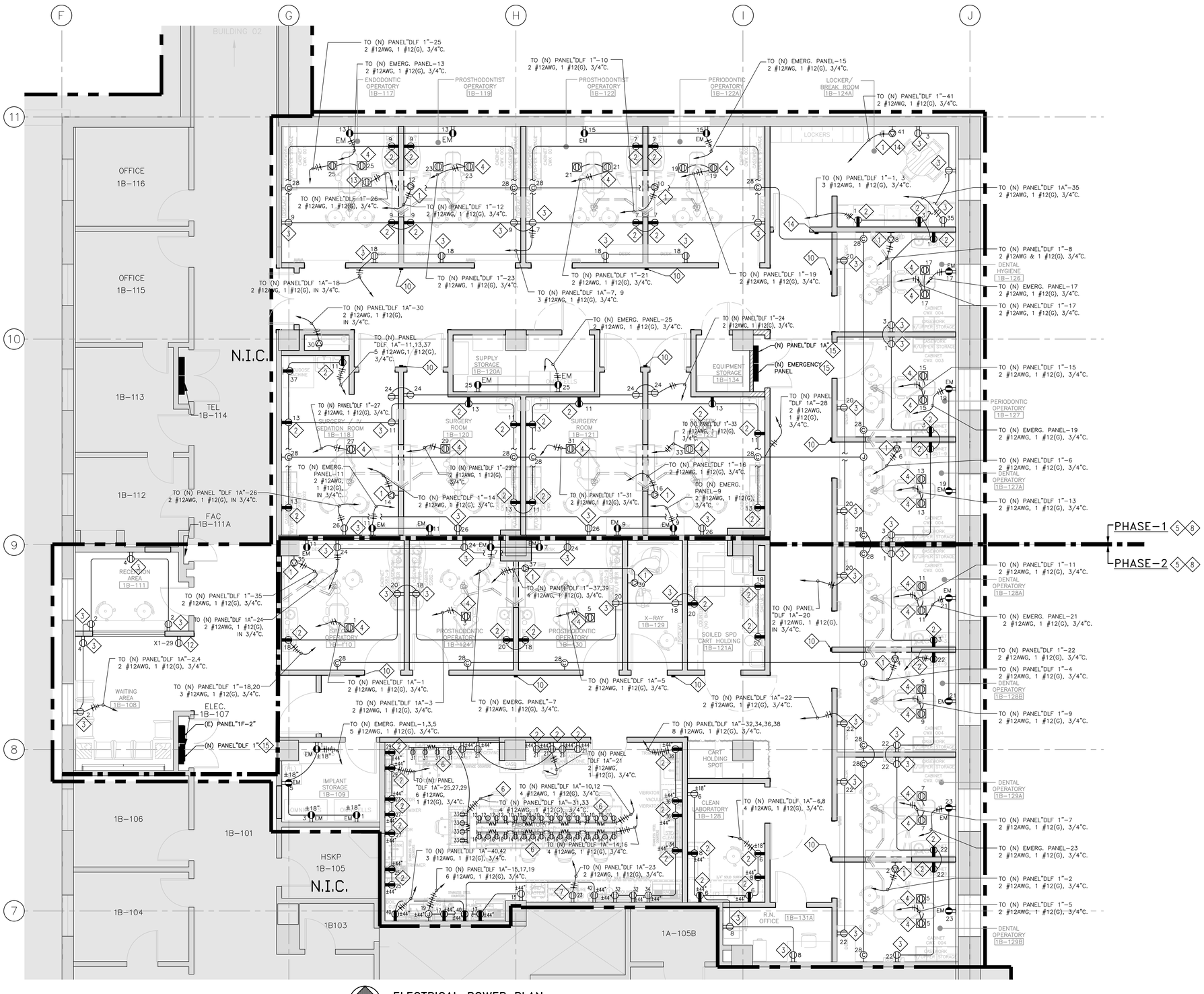

ELECTRICAL POWER PLAN

SCALE: 1/4" = 1'-0"

SHEET NOTES:

1. CONTRACTOR SHALL PROVIDE AND INSTALL NEW DEDICATED SINGLE RECEPTACLE 15A, 125V, NEMA 5-15R HUBBELL HBL8210W OR APPROVED EQUAL. THE INSTALLATION HEIGHT OF THE DUPLEX RECEPTACLE SHALL BE COORDINATED WITH THE VA COTR. THE PURPOSE OF THIS RECEPTACLE IS TO PROVIDE POWER TO THE X-RAY DENTAL EQUIPMENT.
2. CONTRACTOR SHALL PROVIDE AND INSTALL GFI DUPLEX RECEPTACLE 20A, 125V NEMA 5-20R HUBBELL (GFR8300HIL) OR APPROVED EQUAL. . THE INSTALLATION HEIGHT OF THE DUPLEX RECEPTACLE SHALL BE COORDINATED WITH THE VA COTR.
3. CONTRACTOR SHALL PROVIDE AND INSTALL NEW DUPLEX RECEPTACLE AT ±18" AFF. DUPLEX RECEPTACLE SHALL BE NEMA 5-20R, 20A, 125V HUBBELL (HBL 5362) OR APPROVED EQUAL.
4. CONTRACTOR SHALL PROVIDE AND INSTALL NEW FLUSH SERIES DUPLEX RECEPTACLE 20A, 125V, NEMA 5-20R INCLUDE BRUSHED BRASS CARPET FLANGE AND MATCHING BRASS DUPLEX FLAP COVER. EQUIPPED WITH A PRE-WIRED HBL-5352 BLACK RECEPTACLE AND TWO BRASS LOW VOLTAGE KNOCKOUTS WITH POWER CONNECTIONS.
5. ELECTRICAL CONTRACTOR SHALL COORDINATE WITH THE VA COTR IN ADVANCE, SHALL PREPARE AND SUBMIT A DETAILED SEQUENCE OF INSTALLATION FOR NEW WORK TO AVOID ANY DISTURBANCE TO THE HOSPITAL DAILY ACTIVITIES. NO WORK SHALL BEGIN PRIOR TO APPROVAL OF THIS PROPOSED SEQUENCE OF CONSTRUCTION. PROPOSED SEQUENCE OF WORK SHALL BE ORIENTED AROUND ADJACENT ACTIVE PHASE-1&2 DENTAL CLINIC; OFFICES AND EXISTING CORRIDOR ASSURING THAT NO HEAVY STEEL LIFTING SUCH AS DENTAL EQUIPMENT, EXCESSIVE NOISE, CONCRETE CORE DRILLING ARE TRANSMITTED TO THE HOSPITAL BUILDING DURING THE V.A. OFFICE HOURS. PROTECT THE PUBLIC WITH BARRICADE GUARD LIGHTS, POSTING SIGNS DURING THE ENTIRE PROGRESS OF WORK.
6. CONTRACTOR SHALL PROVIDE AND INSTALL NEW WIREMOLD 2400 BENCH MOUNTED WITH FOUR SINGLE RECEPTACLES, EVENLY SPACED WIREMOLD SHALL BE FURNISHED WITH ALL NECESSARY HARDWARE FOR A COMPLETE INSTALLATION.
7. CONTRACTOR SHALL PROVIDE AND INSTALL A BRANCH FEEDER CONDUCTOR FOR NEW LOCATION OF THE RELOCATED FUME HOOD.
8. CONTRACTOR SHALL ENSURE THAT THE DURING THE DEMOLITION PHASES OF THE PROJECT THEY SHALL MAINTAIN POWER/LIGHTING OPERATIONAL TO SPACES PROPOSED TO BE IN USE DURING THE CONSTRUCTION. THEY SHALL AVOID INTERRUPTING SERVICES STILL USE WHEN DEMOLITION LIVE ELECTRICAL CIRCUITS. ANY SHUT-DOWN OF BREAKERS, CIRCUITS OR PANELS SHALL BE PERFORMED AT THE COMMENCE OF THE OPERATIONAL SPACE USERS. COORDINATE WITH THE COTR ANY POWER SHUTDOWN. A SHUTDOWN SCHEDULE SHALL BE PRESENTED TO THE COTR APPROVAL TWO WEEKS PRIOR TO COMMENCEMENT OF WORK.
9. CONTRACTOR SHALL CORE OR SAWCUT FLOOR FOR RECEPTACLE BOX INSTALL. CONTRACTOR TO X-RAY FLOOR AND CONFIRM TO BE CLEAR OF ANY OBSTACLES.
10. CONTRACTOR SHALL INSTALL THE EIGHT EXISTING WALL MOUNTED "PLANMECA" X-RAY EQUIPMENT WITH THEIR RESPECTIVE REMOTE CONTROL AND THREE (3) NEW "PLANMECA" X-RAY EQUIPMENT WITH THEIR RESPECTIVE REMOTE CONTROL THAT WILL BE FURNISHED BY V.A. AND INSTALLED BY CONTRACTOR. CONTRACTOR SHALL PROVIDE AND INSTALL CONDUIT AND WIRES AS REQUIRED.
11. NOT USED.
12. CONTRACTOR SHALL PROVIDE AND INSTALL NEW DUPLEX RECEPTACLE. DUPLEX RECEPTACLE SHALL BE NEMA 5-20R, 20A, 125V HUBBELL (HBL 5362) OR APPROVED EQUAL. NEW DUPLEX RECEPTACLE SHALL BE INSTALLED 72" AFF., EXTEND SIGNAL CABLE FROM EXISTING LOCATION AND POWER FROM EXISTING EMERGENCY PANEL "X1" CIRCUIT 29 (LOCATED AT ELECTRICAL ROOM 1B-107).
13. CONTRACTOR SHALL PROVIDE AND INSTALL DEDICATED DUPLEX RECEPTACLE ABOVE CEILING TO PROVIDE POWER TO GLOBAL MICROSCOPE SYSTEM. PROVIDE PROPERLY GROUNDED HOSPITAL GRADE DUPLEX ELECTRICAL OUTLET WITHIN TWO FEET OF THE CENTER OF MICROSCOPE. COORDINATE INSTALLATION WITH VA COTR.
14. CONTRACTOR SHALL INSTALL TEMPORARY WALL MOUNTED "PLANMECA" X-RAY EQUIPMENT WITH THEIR RESPECTIVE REMOTE CONTROL DURING PHASE TWO CONSTRUCTION. CONTRACTOR SHALL PROVIDE AND INSTALL CONDUIT AND WIRES AS REQUIRED.
15. CONTRACTOR SHALL LABEL IN THE FIELD ALL POWER CIRCUITS AS:
    DLF-1 AS 2001B-NLP01
    DLF-1A AS 2001B-NLP02
    EMERGENCY PANEL AS 2001B-ELP01.
    TO COMPLY WITH THE VA REQUIREMENTS.

Revisions:	Date
ISSUE FOR BID	04/17/12
ISSUE FOR 100% REVIEW	02/9/12
ISSUE FOR 95% REVIEW	12/9/11
ISSUE FOR 65% REVIEW	07/7/11
ISSUE FOR 35% REVIEW	03/24/11

CONSULTANTS:

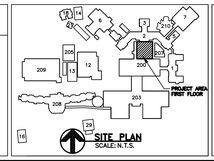

SITE PLAN
SCALE: N.T.S.

REGISTERED PROFESSIONAL ENGINEER
LORENZO A. RIOS CASTILLON
NO. E 10342
EXP. 06/30/2012
ELECTRICAL
STATE OF CALIFORNIA

STAMP

ARCHITECT/ENGINEERS:

ADVANCE DESIGN CONSULTANTS, INC
PROFESSIONAL ENGINEERS
998 PARK AVENUE SAN JOSE, CA 95126
(408) 297-1881 FAX: (408) 294-3186
WWW.ADCENGINEERS.COM

ATTENTION:
ONLY WET SIGNED DOCUMENTS CONSTITUTE ADVANCE DESIGN CONSULTANTS, INC. PROFESSIONAL WORK AND BECAUSE OTHER REPRODUCIBLE DOCUMENTS MAY BE EASILY ALTERED WITHOUT THE CONSENT OF ADVANCE DESIGN CONSULTANTS, INC., THE WET SIGNED DOCUMENTS MUST BE REFERRED TO FOR THE ORIGINAL AND CORRECT INFORMATION. IF THERE ANY DIFFERENCES BETWEEN THE WET SIGNED DOCUMENTS AND ANY OTHER DOCUMENTS, THE WET SIGNED DOCUMENTS SHALL GOVERN.
ADVANCE DESIGN CONSULTANTS, INC. IS NOT RESPONSIBLE FOR ANY MODIFICATIONS MADE TO OUR DOCUMENTS BY ANYONE OTHER THAN AUTHORIZED REPRESENTATIVES OF ADVANCE DESIGN CONSULTANTS, INC.

Drawing Title: ELECTRICAL POWER PLAN

Approved Project Director:

Project Title: BUILDING 200 DENTAL CLINIC

Location: 4150 CLEMENT ST. SAN FRANCISCO, CA

Date: NOVEMBER 2011 | Checked: P LOPEZ | Drawn: M.CUELLAR

Project Number: 662-11-108

Building Number: 200

Drawing Number: 200-E-60-1.0

Dwg. 19 of 44

Office of Construction and Facilities Management

Department of Veterans Affairs

VA FORM 08-6231

ELECTRICAL LIGHTING PLAN

SCALE: 1/4" = 1'-0"

SHEET NOTES:

1. CONTRACTOR SHALL PROVIDE AND INSTALL DUAL RELAY DECORA WALL SWITCH PIR OCCUPANCY SENSOR WITH SELF ADAPTIVE TECHNOLOGY LEVITON CAT# ODSOD-ID OR APPROVED EQUAL.
2. CONTRACTOR SHALL PROVIDE AND INSTALL IN DOOR WALL MOUNTED OCCUPANCY SENSOR LEVITON CAT# OSW12-MOW OR APPROVED EQUAL.
3. CONTRACTOR SHALL CONNECT NEW LIGHT FIXTURES TO EXISTING LIGHTING CIRCUIT WHICH REMAIN ABOVE CEILING.
4. CONTRACTOR SHALL REINSTALL (E) SPEAKERS AND SHALL PROVIDE TWO NEW SPEAKERS AND CONNECT TO NEW COMMUNICATION SYSTEM.
5. CONTRACTOR SHALL REINSTALL (E) FIRE ALARM DEVICES AND CONNECT TO (E) FIRE ALARM SYSTEM.
6. CONTRACTOR SHALL REINSTALL EXISTING WIRELESS SYSTEM.
7. CONTRACTOR SHALL REINSTALL EXISTING PRESSURE SYSTEM.
8. ELECTRICAL CONTRACTOR SHALL COORDINATE WITH THE VA COTR IN ADVANCE, SHALL PREPARE AND SUBMIT A DETAILED SEQUENCE OF INSTALLATION FOR NEW WORK TO AVOID ANY DISTURBANCE TO THE HOSPITAL DAILY ACTIVITIES. NO WORK SHALL BEGIN PRIOR TO APPROVAL OF THIS PROPOSED SEQUENCE OF CONSTRUCTION. PROPOSED SEQUENCE OF WORK SHALL BE ORIENTED AROUND ADJACENT ACTIVE PHASE-1&2 DENTAL CLINIC; OFFICES AND EXISTING CORRIDOR ASSURING THAT NO HEAVY STEEL LIFTING SUCH AS DENTAL EQUIPMENT, EXCESSIVE NOISE, CONCRETE CORE DRILLING ARE TRANSMITTED TO THE HOSPITAL BUILDING DURING THE V.A. OFFICE HOURS. PROTECT THE PUBLIC WITH BARRICADE GUARD LIGHTS, POSTING SIGNS DURING THE ENTIRE PROGRESS OF WORK.
9. CONTRACTOR SHALL ENSURE THAT THE DURING THE DEMOLITION PHASES OF THE PROJECT THEY SHALL MAINTAIN POWER/LIGHTING OPERATIONAL TO SPACES PROPOSED TO BE IN USE DURING THE CONSTRUCTION. THEY SHALL AVOID INTERRUPTING SERVICES STILL USE WHEN DEMOLITION LIVE ELECTRICAL CIRCUITS. ANY SHUT-DOWN OF BREAKERS, CIRCUITS OR PANELS SHALL BE PERFORMED AT THE COMMENCE OF THE OPERATIONAL SPACE USERS. COORDINATE WITH THE COTR ANY POWER SHUTDOWN. A SHUTDOWN SCHEDULE SHALL BE PRESENTED TO THE COTR APPROVAL TWO WEEKS PRIOR TO COMMENCEMENT OF WORK.
10. CONTRACTOR SHALL PROVIDE AND INSTALL NEW ULTRASONIC CEILING MOUNTED OCCUPANCY SENSOR LEVITON CATALOG # OSCO-MOW.
11. CONTRACTOR SHALL PROVIDE AND INSTALL NEW ONE GANG LIGHT SWITCH TO CONTROL THE NEW RAIL DENTAL LIGHT. PROVIDE CONDUIT AND WIRES AS REQUIRED.
12. CONTRACTOR SHALL PROVIDE AND INSTALL NEW LIGHTING FIXTURE LIGHTOLIER LIGHTING SYSTEMS PTS8-1-0-2-4, 4'-0" COVE LIGHT WALL FEATURE LAMP THIS LIGHT SHALL BE INSTALLED IN WAITING AREA.

ISSUE FOR BID	04/17/12
ISSUE FOR 100% REVIEW	02/9/12
ISSUE FOR 95% REVIEW	12/9/11
ISSUE FOR 65% REVIEW	07/7/11
ISSUE FOR 35% REVIEW	03/24/11
Revisions:	Date

VA FORM 08-6231

CONSULTANTS:

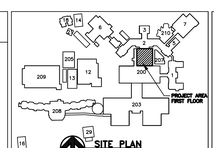

SITE PLAN
SCALE: N.T.S.

STAMP

ARCHITECT/ENGINEERS:

ADVANCE DESIGN CONSULTANTS, INC
PROFESSIONAL ENGINEERS
998 PARK AVENUE SAN JOSE, CA 95126
(408) 297-1881 FAX: (408) 294-3186
WWW.ADCENGINEERS.COM

ATTENTION:

ONLY WET SIGNED DOCUMENTS CONSTITUTE ADVANCE DESIGN CONSULTANTS, INC. PROFESSIONAL WORK AND BECAUSE OTHER REPRODUCIBLE DOCUMENTS MAY BE EASILY ALTERED WITHOUT THE CONSENT OF ADVANCE DESIGN CONSULTANTS, INC., THE WET SIGNED DOCUMENTS MUST BE REFERRED TO FOR THE ORIGINAL AND CORRECT INFORMATION. IF THERE ANY DIFFERENCES BETWEEN THE WET SIGNED DOCUMENTS AND ANY OTHER DOCUMENTS, THE WET SIGNED DOCUMENTS SHALL GOVERN.

ADVANCE DESIGN CONSULTANTS, INC. IS NOT RESPONSIBLE FOR ANY MODIFICATIONS MADE TO OUR DOCUMENTS BY ANYONE OTHER THAN AUTHORIZED REPRESENTATIVES OF ADVANCE DESIGN CONSULTANTS, INC.

Drawing Title: ELECTRICAL LIGHTING PLAN

Approved Project Director:

Project Title: BUILDING 200 DENTAL CLINIC

Location: 4150 CLEMENT ST. SAN FRANCISCO, CA

Date: NOVEMBER 2011 | Checked: P LOPEZ | Drawn: M.CUELLAR

Project Number: 662-11-108

Building Number: 200

Drawing Number: 200-E-60-1.1

Dwg. 20 of 44

Office of Construction and Facilities Management

Department of Veterans Affairs

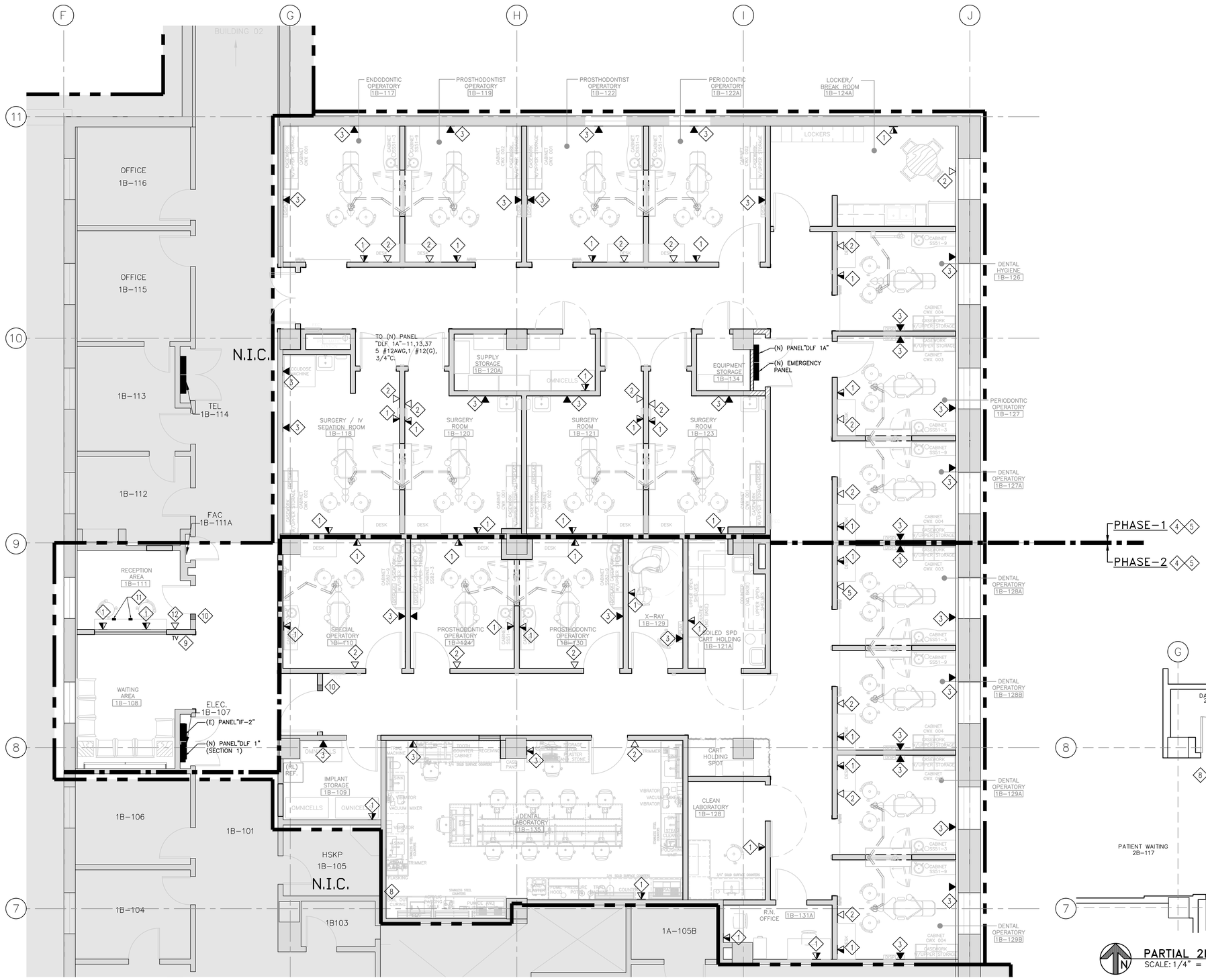

COMMUNICATION AND DATA CABLING PLAN
SCALE: 1/4" = 1'-0"

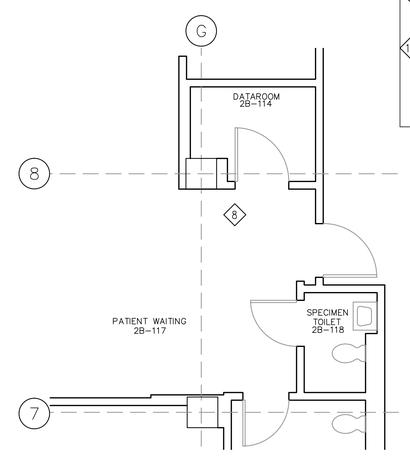

PARTIAL 2ND FLOOR PLAN
SCALE: 1/4" = 1'-0"

SHEET NOTES:

1. CONTRACTOR SHALL PROVIDE AND INSTALL NEW FOUR PORT WITH 3 MULTIPOINT DATA AND ONE TELEPHONE OUTLET J-BOX WITH MULTIPORT FACE AND WIRING ±18 AFF WITH 3/4"C. PULL COMMUNICATION TO ROOM 1B-114 AND PULL DATA TO ROOM 2B-101 INTO CEILING SPACE WITH BUSHING.
2. CONTRACTOR SHALL PROVIDE AND INSTALL NEW SINGLE PORT INTERCOM OUTLET AT ±60" AFF IN 3/4"C. INTO CEILING SPACE WITH BUSHING.
3. CONTRACTOR SHALL PROVIDE AND INSTALL NEW FOUR PORT WITH 4 MULTIPOINT DATA WITH MULTIPOINT FACE AND WIRING ±18 AFF WITH 3/4"C. PULL DATA TO ROOM 2B-101 INTO CEILING SPACE WITH BUSHING.
4. ELECTRICAL CONTRACTOR SHALL COORDINATE WITH THE VA COTR IN ADVANCE, SHALL PREPARE AND SUBMIT A DETAILED SEQUENCE OF INSTALLATION FOR NEW WORK TO AVOID ANY DISTURBANCE TO THE HOSPITAL DAILY ACTIVITIES. NO WORK SHALL BEGIN PRIOR TO APPROVAL OF THIS PROPOSED SEQUENCE OF CONSTRUCTION. PROPOSED SEQUENCE OF WORK SHALL BE ORIENTED AROUND ADJACENT ACTIVE PHASE-1&2 DENTAL CLINIC; OFFICES AND EXISTING CORRIDOR ASSURING THAT NO HEAVY STEEL LIFTING SUCH AS DENTAL EQUIPMENT, EXCESSIVE NOISE, CONCRETE CORE DRILLING ARE TRANSMITTED TO THE HOSPITAL BUILDING DURING THE V.A. OFFICE HOURS. PROTECT THE PUBLIC WITH BARRICADE GUARD LIGHTS, POSTING SIGNS DURING THE ENTIRE PROGRESS OF WORK.
5. CONTRACTOR SHALL ENSURE THAT THE DURING THE DEMOLITION PHASES OF THE PROJECT THEY SHALL MAINTAIN POWER/LIGHTING OPERATIONAL TO SPACES PROPOSED TO BE IN USE DURING THE CONSTRUCTION. THEY SHALL AVOID INTERRUPTING SERVICES STILL USE WHEN DEMOLITION LIVE ELECTRICAL CIRCUITS. ANY SHUT-DOWN OF BREAKERS, CIRCUITS OR PANELS SHALL BE PERFORMED AT THE COMMENCE OF THE OPERATIONAL SPACE USERS. COORDINATE WITH THE COTR ANY POWER SHUTDOWN. A SHUTDOWN SCHEDULE SHALL BE PRESENTED TO THE COTR APPROVAL TWO WEEKS PRIOR TO COMMENCEMENT OF WORK.
6. CONTRACTOR SHALL PROVIDE AND INSTALL DATA CABLE FROM X-RAY TO SERVER ROOM.
7. CONTRACTOR SHALL PROVIDE AND INSTALL CABLING FROM SERVER ROOM TO OPERATING ROOM MONITORS.
8. DATA CLOSET IS LOCATED ON SECOND FLOOR, APPROXIMATELY 10 FT. FROM THIS LOCATION. CONTRACTOR SHALL CORE, INSTALL FIRE RATED PLYWOOD AND ADD PATCH PANEL AS REQUIRED FOR NEW CABLING.
9. EXTEND TV CABLING TO NEW LOCATION IN WAITING AREA AND BREAKROOM.
10. EXTEND REMOTE DOOR RELEASE TO 1B-111.
11. CONTRACTOR SHALL RELOCATE EXISTING PANIC ALARM THAT WAS DISCONNECTED FROM THE RECEPTION DESK TO NEW RECEPTION AREA ROOM 1B-111. CONTRACTOR SHALL PROVIDE AND INSTALL CONDUIT AND WIRES AS REQUIRED.
12. CONTRACTOR SHALL PROVIDE AND INSTALL NEW SINGLE PORT INTERCOM OUTLET AT ±18" AFF IN 3/4"C. INTO CEILING SPACE WITH BUSHING.
13. CONTRACTOR SHALL PROVIDE AND INSTALL NEW FOUR PORT WITH 3 MULTIPOINT DATA AND ONE TELEPHONE OUTLET J-BOX WITH MULTIPORT FACE AND WIRING ±60" AFF WITH 3/4"C. PULL COMMUNICATION TO ROOM 1B-114 AND PULL DATA TO ROOM 2B-101 INTO CEILING SPACE WITH BUSHING.

Revisions:	Date
ISSUE FOR BID	04/17/12
ISSUE FOR 100% REVIEW	02/9/12
ISSUE FOR 95% REVIEW	12/9/11
ISSUE FOR 65% REVIEW	07/7/11
ISSUE FOR 35% REVIEW	03/24/11

CONSULTANTS:

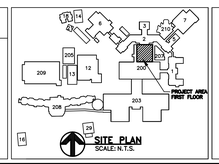

SITE PLAN
SCALE: N.T.S.

REGISTERED PROFESSIONAL ENGINEER LORENZO A. RIOS CASTILLON NO. E 10342 EXP. 06/30/2012 ELECTRICAL STATE OF CALIFORNIA

STAMP

ARCHITECT/ENGINEERS:

ADVANCE DESIGN CONSULTANTS, INC
PROFESSIONAL ENGINEERS
998 PARK AVENUE SAN JOSE, CA 95126
(408) 297-1881 FAX: (408) 294-3186
WWW.ADCENGINEERS.COM

ATTENTION:
ONLY WET SIGNED DOCUMENTS CONSTITUTE ADVANCE DESIGN CONSULTANTS, INC. PROFESSIONAL WORK AND BECAUSE OTHER REPRODUCIBLE DOCUMENTS MAY BE EASILY ALTERED WITHOUT THE CONSENT OF ADVANCE DESIGN CONSULTANTS, INC., THE WET SIGNED DOCUMENTS MUST BE REFERRED TO FOR THE ORIGINAL AND CORRECT INFORMATION. IF THERE ANY DIFFERENCES BETWEEN THE WET SIGNED DOCUMENTS AND ANY OTHER DOCUMENTS, THE WET SIGNED DOCUMENTS SHALL GOVERN.
ADVANCE DESIGN CONSULTANTS, INC. IS NOT RESPONSIBLE FOR ANY MODIFICATIONS MADE TO OUR DOCUMENTS BY ANYONE OTHER THAN AUTHORIZED REPRESENTATIVES OF ADVANCE DESIGN CONSULTANTS, INC.

Drawing Title:
ELECTRICAL COMMUNICATION AND DATA CABLING PLAN

Approved Project Director:

Project Title:
BUILDING 200
DENTAL CLINIC

Location:
4150 CLEMENT ST. SAN FRANCISCO, CA

Date: NOVEMBER 2011 | Checked: P LOPEZ | Drawn: M.CUELLAR

Project Number: 662-11-108
Building Number: 200
Drawing Number: 200-E-60-1.2
Dwg. 21 of 44

Office of Construction and Facilities Management
Department of Veterans Affairs

VA FORM 08-6231

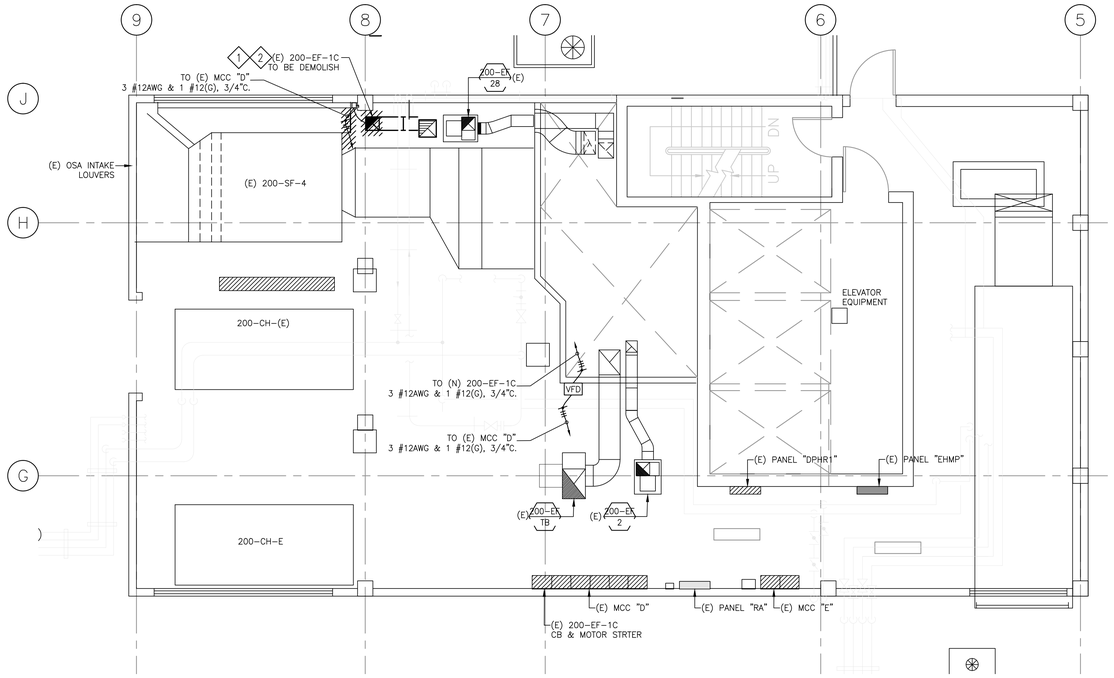

PENTHOUSE ROOM PLAN
SCALE: 3/16" = 1'-0"

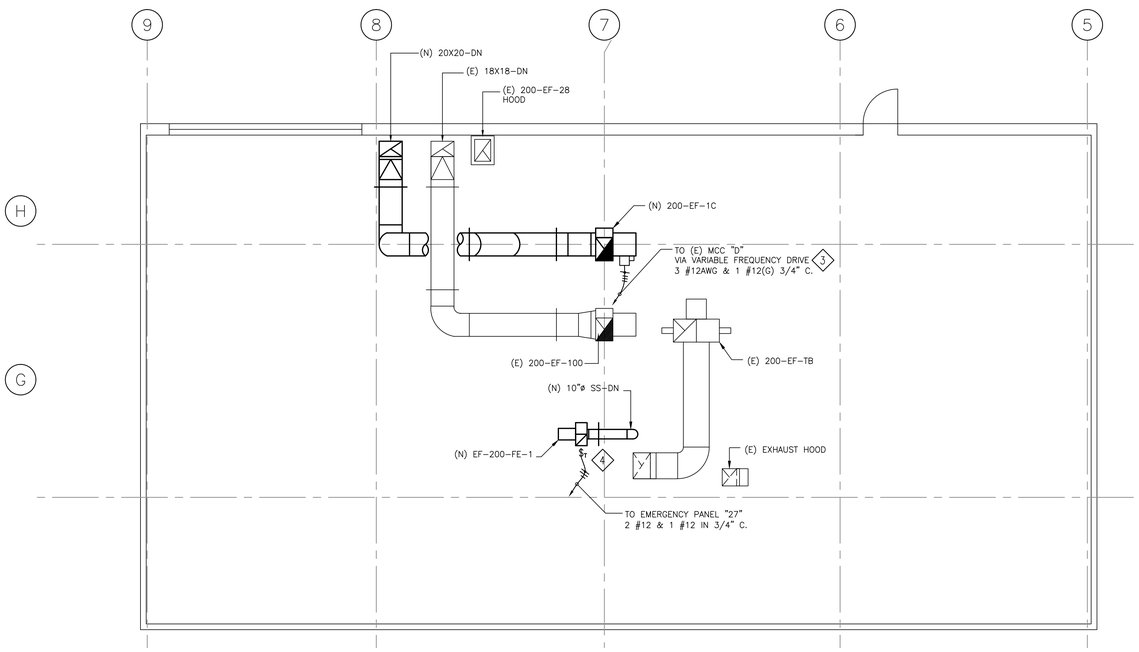

PARTIAL PENTHOUSE NEW WORK ROOF PLAN
SCALE: 3/16" = 1'-0"

SHEET NOTES:

1. ELECTRICAL CONTRACTOR IS RESPONSIBLE FOR ALL COORDINATION WITH ALL OTHER TRADES AND V.A. C.O.T.R. IN ADVANCE PRIOR TO START OF ANY DEMOLITION. SEE PHASE-1 & 2.
2. DEMOLITION OF EXISTING EXHAUST FAN 200-EF-1C, SEE DRAWING 200-E-60-1.0, NOTE 14 AND DRAWING 200-E-60-0.1, NOTE 8.
3. CONTRACTOR SHALL SEE DRAWING 200-E-60-0.1 FOR THE INSTALLATION OF EXHAUST FAN 200-EF-1C, NOTES 9, 10, 11 AND 12.
4. CONTRACTOR SHALL PROVIDE AND INSTALL A FRACTIONAL HORSE POWER MANUAL STARTER WITH MELTING ALLOY TYPE OVERLOAD RELAY NEMA SIZE 3R ENCLOSURE SQUARE "D" CLASS W70 CAT "FW1" OR APPROVED EQUAL.

Revisions:	Date
ISSUE FOR BID	04/17/12
ISSUE FOR 100% REVIEW	02/9/12
ISSUE FOR 95% REVIEW	12/9/11
ISSUE FOR 65% REVIEW	07/7/11
ISSUE FOR 35% REVIEW	03/24/11

CONSULTANTS:

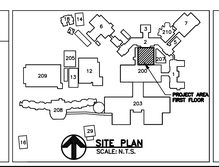

STAMP

ARCHITECT/ENGINEERS:

ADVANCE DESIGN CONSULTANTS, INC
PROFESSIONAL ENGINEERS
998 PARK AVENUE SAN JOSE, CA 95126
(408) 297-1881 FAX: (408) 294-3186
WWW.ADCENGINEERS.COM

ATTENTION:

ONLY WET SIGNED DOCUMENTS CONSTITUTE ADVANCE DESIGN CONSULTANTS, INC. PROFESSIONAL WORK AND BECAUSE OTHER REPRODUCIBLE DOCUMENTS MAY BE EASILY ALTERED WITHOUT THE CONSENT OF ADVANCE DESIGN CONSULTANTS, INC., THE WET SIGNED DOCUMENTS MUST BE REFERRED TO FOR THE ORIGINAL AND CORRECT INFORMATION. IF THERE ANY DIFFERENCES BETWEEN THE WET SIGNED DOCUMENTS AND ANY OTHER DOCUMENTS, THE WET SIGNED DOCUMENTS SHALL GOVERN.

ADVANCE DESIGN CONSULTANTS, INC. IS NOT RESPONSIBLE FOR ANY MODIFICATIONS MADE TO OUR DOCUMENTS BY ANYONE OTHER THAN AUTHORIZED REPRESENTATIVES OF ADVANCE DESIGN CONSULTANTS, INC.

Drawing Title: PARTIAL PENTHOUSE DEMOLITION PLAN AND NEW WORK ROOF PLAN

Approved Project Director:

Project Title: BUILDING 200 DENTAL CLINIC

Location: 4150 CLEMENT ST. SAN FRANCISCO, CA

Date: NOVEMBER 2011 | Checked: P. LOPEZ | Drawn: M. CUELLAR

Project Number: 662-11-108

Building Number: 200

Drawing Number: 200-E-60-2.0

Dwg 22 of 44

Office of Construction and Facilities Management

Department of Veterans Affairs

VA FORM 08-6231

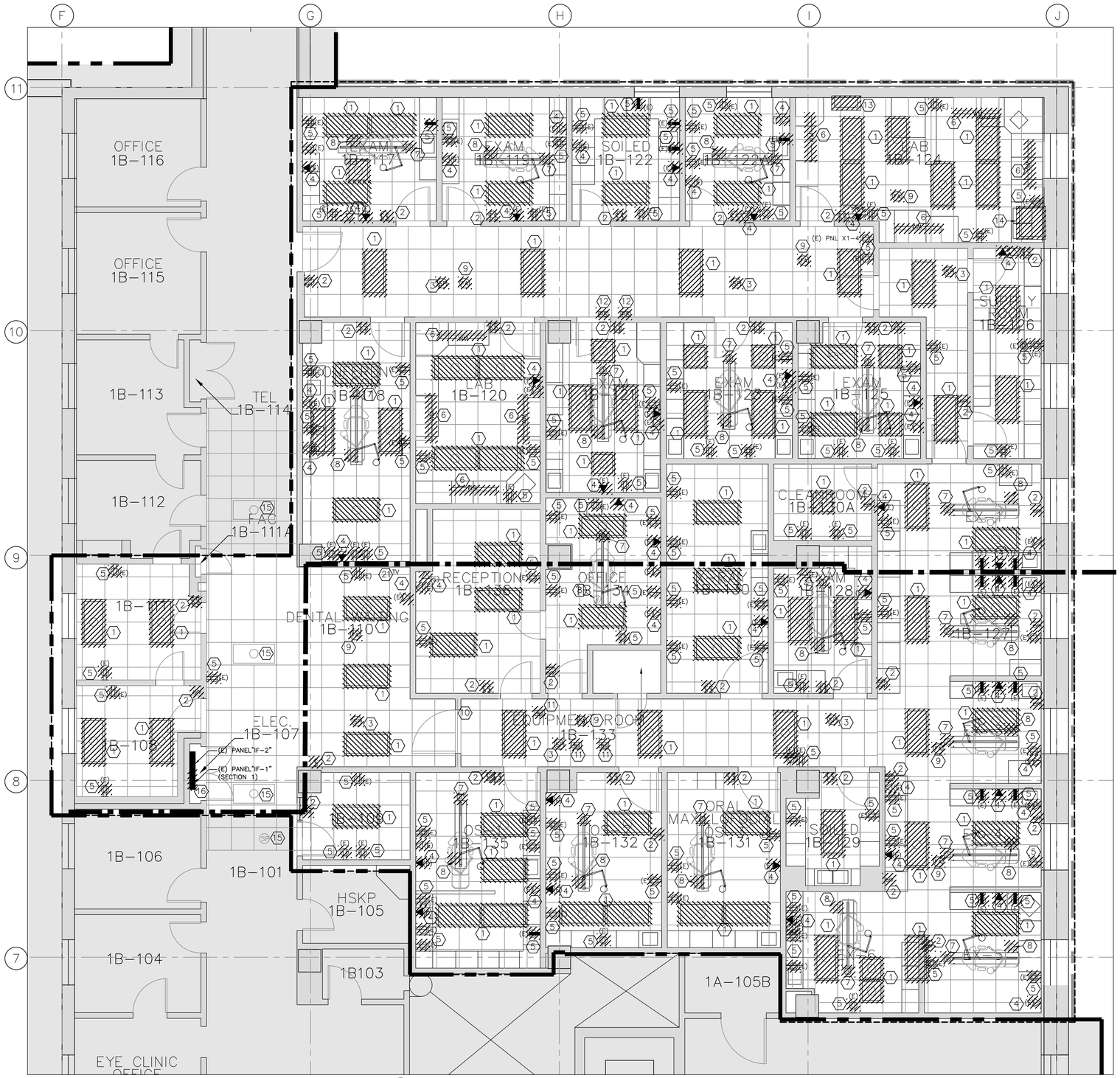

LIGHTING AND POWER PLAN-DEMOLITION
SCALE: 1/4" = 1'-0"

DEMOLITION NOTES:

1. CONTRACTOR SHALL DISCONNECT AND REMOVE ALL LIGHT FIXTURE FROM EXISTING LIGHTING CIRCUIT SHOWN WITH HASH LINE IN THIS AREA FROM EXISTING LIGHT SWITCH UP TO THE NEXT J-BOX WHICH IS TO REMAIN. LIGHTING CIRCUIT SHALL REMAIN ABOVE CEILING IN A J-BOX FOR FUTURE USE. TAG AND TAPE ENDS.
2. DISCONNECT AND REMOVE ALL EXISTING LIGHT SWITCHES RELATED TO THIS LIGHTING SCHEME.
3. DISCONNECT AND REMOVE EXISTING SPEAKER AND INTERCOM.
4. DISCONNECT AND REMOVE EXISTING TELEPHONE/DATA/ INTERCOM OUTLET. CABLE SHALL REMAIN ABOVE CEILING FOR FUTURE USE. TAG AND TAPE ENDS.
5. DISCONNECT AND REMOVE ALL EXISTING RECEPTACLES SHOWN WITH HASH LINES BACK TO THE SOURCE.
6. CONTRACTOR SHALL DISCONNECT AND REMOVE (E) RECEPTACLES BACK TO THE SOURCE WHICH PROVIDE POWER TO EXISTING WIREWAY ATTACHED TO LAB BENCH.
7. CONTRACTOR SHALL DISCONNECT AND REMOVE EXISTING J-BOX WHICH THE BRANCH CIRCUIT FOR DENTAL TRACK LIGHT BACK TO THE SOURCE SHOWN WITH HASH LINES.
8. CONTRACTOR SHALL DISCONNECT AND REMOVE EXISTING J-BOX WHICH THE BRANCH CIRCUIT FOR DENTAL CHAIR BACK TO THE SOURCE SHOWN WITH HASH LINES.
9. DISCONNECT AND REMOVE EXISTING FIRE ALARM BACK TO THE NEAREST ITEM WHICH IS TO REMAIN. COORDINATE WITH COTR.
10. CONTRACTOR SHALL DISCONNECT & REMOVE EXISTING BRANCH CIRCUIT REMOTE DOOR STRIKE RELEASE BACK TO THE SOURCE.
11. DISCONNECT AND REMOVE EXISTING WIRELESS SYSTEM. CONTRACTOR SHALL SAVE THIS DEVICE WHICH SHALL BE RE-INSTALLED IN THE NEW WORK.
12. DISCONNECT AND REMOVE EXISTING PRESSURE SYSTEM. CONTRACTOR SHALL SAVE THIS DEVICE WHICH SHALL BE RE-INSTALLED IN THE NEW WORK.
13. CONTRACTOR SHALL DISCONNECT AND REMOVE EXISTING FUME HOOD BRANCH CIRCUIT BACK TO THE SOURCE SHOWN WITH HASH LINES. EXISTING FUME HOOD SHALL BE RELOCATED TO NEW LOCATION AS INDICATED ON DWG. 200-E-60-1.0.
14. CONTRACTOR SHALL DISCONNECT AND REMOVE EXISTING EXHAUST FAN 200-EF-1C BRANCH CIRCUIT BACK TO SOURCE LOCATED IN MCC-D SECTION 2D IN PENTHOUSE. SHOWN WITH HASH LINES AND ALL ELECTRICAL EQUIPMENT ASSOCIATED WITH THIS EQUIPMENT.
15. ELECTRICAL ITEMS TO REMAIN IN PLACE.
16. CONTRACTOR SHALL DISCONNECT AND REMOVE EXISTING POWER PANEL"IF-1"(SECTION 1) LOCATED AT ROOM 1B-107. CONDUIT AND WIRES BACK UP TO SOURCE.
17. ELECTRICAL CONTRACTOR SHALL COORDINATE WITH THE VA COTR IN ADVANCE, SHALL PREPARE AND SUBMIT A DETAILED SEQUENCE OF INSTALLATION FOR NEW WORK TO AVOID ANY DISTURBANCE TO THE HOSPITAL DAILY ACTIVITIES. NO WORK SHALL BEGIN PRIOR TO APPROVAL OF THIS PROPOSED SEQUENCE OF CONSTRUCTION. PROPOSED SEQUENCE OF WORK SHALL BE ORIENTED AROUND ADJACENT ACTIVE PHASE-1&2 DENTAL CLINIC; OFFICES AND EXISTING CORRIDOR ASSURING THAT NO HEAVY STEEL LIFTING SUCH AS DENTAL EQUIPMENT, EXCESSIVE NOISE, CONCRETE CORE DRILLING ARE TRANSMITTED TO THE HOSPITAL BUILDING DURING THE V.A. OFFICE HOURS. PROTECT THE PUBLIC WITH BARRICADE GUARD LIGHTS, POSTING SIGNS DURING THE ENTIRE PROGRESS OF WORK.
18. CONTRACTOR SHALL ENSURE THAT THE DURING THE DEMOLITION PHASES OF THE PROJECT THEY SHALL MAINTAIN POWER/LIGHTING OPERATIONAL TO SPACES PROPOSED TO BE IN USE DURING THE CONSTRUCTION. THEY SHALL AVOID INTERRUPTING SERVICES STILL USE WHEN DEMOLITION LIVE ELECTRICAL CIRCUITS. ANY SHUT-DOWN OF BREAKERS, CIRCUITS OR PANELS SHALL BE PERFORMED AT THE COMMENCE OF THE OPERATIONAL SPACE USERS. COORDINATE WITH THE CORT ANY POWER SHUTDOWN. A SHUTDOWN SCHEDULE SHALL BE PRESENTED TO THE CORT APPROVAL TWO WEEKS PRIOR TO COMMENCEMENT OF WORK.
19. CONTRACTOR SHALL DISCONNECT AND SAVE EXISTING EIGHT (8) WALL MOUNTED "PLANMECA" X-RAY WITH ITS REMOTE CONTROL LOCATED OUTSIDE ROOM. CONTRACTOR SHALL TAKE NOTE OF ALL CONNECTED CONDUITS AND WIRES THAT WILL NEED ON NEW WORK.
20. CONTRACTOR SHALL DISCONNECT AND SAVE EXISTING PANIC ALARM LOCATED UNDERNEATH OF RECEPTION DESK. CONTRACTOR SHALL IDENTIFY TAG AND MARK CABLES BEFORE THEY ARE REMOVED IN A MANNER THAT THEY CAN BE USED ON NEW WORK.
21. DISCONNECT AND SAVE TV CABLING, SAVE TV AND MOUNTING BRACKET FOR INSTALLATION AT UPGRADED WAITING AREA.

Revisions:	Date
ISSUE FOR BID	04/17/12
ISSUE FOR 100% REVIEW	02/9/12
ISSUE FOR 95% REVIEW	12/9/11
ISSUE FOR 65% REVIEW	07/7/11
ISSUE FOR 35% REVIEW	03/24/11

VA FORM 08-6231

CONSULTANTS:

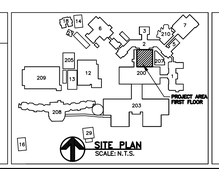

SITE PLAN
SCALE: N.T.S.

STAMP

ARCHITECT/ENGINEERS:
ADVANCE DESIGN CONSULTANTS, INC
PROFESSIONAL ENGINEERS
998 PARK AVENUE SAN JOSE, CA 95126
(408) 297-1881 FAX: (408) 294-3186
WWW.ADCENGINEERS.COM

ATTENTION:
ONLY WET SIGNED DOCUMENTS CONSTITUTE ADVANCE DESIGN CONSULTANTS, INC. PROFESSIONAL WORK AND BECAUSE OTHER REPRODUCIBLE DOCUMENTS MAY BE EASILY ALTERED WITHOUT THE CONSENT OF ADVANCE DESIGN CONSULTANTS, INC., THE WET SIGNED DOCUMENTS MUST BE REFERRED TO FOR THE ORIGINAL AND CORRECT INFORMATION. IF THERE ANY DIFFERENCES BETWEEN THE WET SIGNED DOCUMENTS AND ANY OTHER DOCUMENTS, THE WET SIGNED DOCUMENTS SHALL GOVERN.
ADVANCE DESIGN CONSULTANTS, INC. IS NOT RESPONSIBLE FOR ANY MODIFICATIONS MADE TO OUR DOCUMENTS BY ANYONE OTHER THAN AUTHORIZED REPRESENTATIVES OF ADVANCE DESIGN CONSULTANTS, INC.

Drawing Title: ELECTRICAL LIGHTING AND POWER PLAN-DEMOLITION

Approved Project Director:

Project Title: BUILDING 200 DENTAL CLINIC

Location: 4150 CLEMENT ST. SAN FRANCISCO, CA

Date: NOVEMBER 2011 | Checked: PJLOPEZ | Drawn: M CUELLAR

Project Number: 662-11-108

Building Number: 200

Drawing Number: 200-ED-60-1.0

Dwg. 23 of 44

Office of Construction and Facilities Management

Department of Veterans Affairs

GENERAL NOTES:

A. CODE COMPLIANCE:

THE CONTRACTOR SHALL COMPLY WITH ALL APPLICABLE NATIONAL, STATE, AND LOCAL CODES ISSUED BY THE AUTHORITIES HAVING JURISDICTION. THE COMPLETE MECHANICAL INSTALLATION SHALL BE IN ACCORDANCE WITH THE ADOPTED EDITION OF CMC, UMC, UPC, UFC, UBC, TITLE 24, OSHA, NFPA, AND ALL "VASF" REQUIREMENTS, THE LATEST RULES AND REGULATIONS OF THE SAFETY ORDERS ISSUED BY THE DIVISION OF INDUSTRIAL SAFETY, STATE OF CALIFORNIA.

B. "AS-BUILT" DRAWINGS:

THE CONTRACTOR SHALL MAINTAIN AT THE JOB AN UP-TO-DATE "AS-BUILT" DRAWING SET. THE "AS-BUILT" DRAWING SET SHALL REFLECT ALL APPROVED CHANGES TO THE DESIGN DRAWINGS. THE "AS-BUILT" DRAWINGS SET SHALL BE KEPT CLEAN AND IN GOOD CONDITION AND SHALL BE TURNED OVER "VASF" TWO (2) WEEKS AFTER COMPLETION OF THE PROJECT.

C. FUNCTIONAL TEST AND ACCEPTANCE:

UPON COMPLETION OF THE PROJECT, THE CONTRACTOR SHALL SCHEDULE AND PERFORM A COMPLETE FUNCTIONAL TEST TO DEMONSTRATE TO "VASF" REPRESENTATIVE THAT THE SYSTEMS ARE OPERATING AS INTENDED. ANY DEFECTS OR DISCREPANCIES IN THE MATERIAL OR WORK SHALL BE CORRECTED IMMEDIATELY TO THE SATISFACTION OF "VASF" AT NO ADDITIONAL COST, NOISY OPERATION AND/OR VIBRATION TRANSMISSION TO THE BLDG. STRUCTURE WILL NOT BE ACCEPTED.

D. GENERAL REQUIREMENTS:

1. DRAWINGS ARE DIAGRAMMATIC, AND INDICATE GENERAL ARRANGEMENT OF THE PIPING/PLUMBING SYSTEMS ONLY. THE CONTRACTOR SHALL FIELD COORDINATE ALL PIPING INSTALLATION ALL TRADES.
2. BRACE AND SUPPORT ALL PIPING AND MECHANICAL EQUIPMENT AND SUPPORT IN ACCORDANCE WITH THE MANUFACTURER'S GUIDELINES, VASF STANDARDS AND THE LATEST SMACNA GUIDELINES.
3. PROVIDE ALL VALVES AND OTHER PIPING SPECIALTIES AS FULL-LINE SIZE, UNLESS OTHERWISE SHOWN.
4. SHUT-OFF VALVES SHOWN ARE ONLY SYMBOLS AND DO NOT REFLECT THE VALVE TYPE OR MATERIALS. CONTRACTOR SHALL PROVIDE AND INSTALL VALVES WITH CONSTRUCTION AND MATERIAL COMPLYING WITH VASF SPECIFICATIONS.
5. SEAL AROUND ALL PIPES PENETRATING FIRE RATED WALLS AND CONCRETE FLOOR WITH UL LISTED MATERIAL. SEAL SMOKE TIGHT ALL PIPE PENETRATIONS.
6. ALL PIPING/PLUMBING SHALL BE PROVIDED WITH LABEL. LABEL SHALL INDICATE THE NAME OF SERVICED LIQUID OR GAS. IT SHALL ALSO INDICATE THE DIRECTION OF FLOW. LABEL'S COLOR SIZE AND SPACING SHALL BE PER VASF SPECIFICATIONS.
7. COORDINATE ALL PIPING AND VALVE INSTALLATIONS WITH ALL OTHER TRADES.
8. PROTECT THE PUBLIC FROM INJURY DURING THE ENTIRE PROGRESS OF WORK BY POSTING SIGNS, GUARD LIGHTS AND BARRICADES.
9. DEBRIS SHALL BE REMOVED FROM THE PREMISES ON A DAILY BASIS. DO NOT ALLOW DEBRIS TO ACCUMULATE. PROTECT ADJACENT AREAS FROM DUST AND DEBRIS.
10. CONTRACTOR SHALL FAMILIARIZE HIMSELF WITH VA SPECIFICATIONS. PROVIDE ALL MATERIALS, CONSTRUCTION, INSTALLATION AND SUPPORTS TO CONSTITUTE OPERABLE. OXYGEN, NITROUS OXIDE, MEDICAL AIR, MEDICAL VACUUM, DENTAL VACUUM, NATURAL GAS, COLD WATER, HOT WATER AND WASTE AND/VENT.
11. CONTRACTOR SHALL SCAN CONCRETE FLOOR OR WALL BEFORE CORE DRILLING TO AVOID CUTTING THE EXISTING STEEL REINFORCED BAR.

ABBREVIATIONS:

ABBR.	DESCRIPTION	ABBR.	DESCRIPTION
AMB	AMBIENT	JS	JANITOR SINK
AW	ACID WASTE	L	LAVATORY
BHP	BRAKE HORSEPOWER	LB	POUND
MA	MEDICAL AIR	LS	LABORATORY SINK
CLG	CEILING	MAX	MAXIMUM
O_2	OXYGEN	MIN	MINIMUM
CU FT	CUBIC FEET	(N)	NEW
CW	COLD WATER	NG	NATURAL GAS
(E)	EXISTING	OFD	OVERFLOW DRAIN
ELEC	ELECTRICAL	PD	PRESSURE DROP
F	DEGREE FAHRENHEIT	PSI	POUNDS PER SQUARE INCH
FLR	FLOOR	SS	SANITARY SEWER
FT	FEET	SEC	SECONDS
GPM	GALLON PER MINUTE	SQ.FT.	SQUARE FEET
GPH	GALLON PER HOUR	TEMP	TEMPERATURE
HP	HORSEPOWER	TYP	TYPICAL
HW	HOT WATER	MV	MEDICAL VACUUM
HZ	HERTZ	V	VENT
IN	INCHES	HV	HOUSE VACUUM
DV	DENTAL VACUUM	N_2O	NITROUS OXIDE
DU	DENTAL UNIT	MV	MEDICAL VACUUM
EEW	EMERGENCY EYEWASH	BFP	BACK FLOW PREVENTOR

PLUMBING FIXTURE UNIT COUNT

MARK	DESCRIPTION	QUANTITY	WASTE & VENT		COLD WATER		HOT WATER		REMARKS
			FU/EA	FU/TOT	FU/EA	FU/TOT	FU/EA	FU/TOT	
S 1	SINK	14	2	28	1.5	21	1.5	21	1
S 2	SINK	4	3	12	1.5	6	1.5	6	3
	NOT USED								
S 4	SINK	1	2	2	3	3	3	3	3
S 5	SINK	1	2	2	1.5	1.5	1.5	1.5	3
S 6	SINK	1	2	2	1.5	1.5	1.5	1.5	3
S 7	SINK	1	3	3	1.5	1.5	1.5	1.5	1
S 8	SINK	4	3	12	1.5	6	1.5	6	1
EEW 1	EMERGENCY EYEWASH	4	–	–	.75	3	–	–	2
TOTAL FU/GPM				13		43.5 / 26		40.5 / 25	–

1. SINKS TO BE PROVIDED BY CABINET/CASEWORK MANUFACTURER. CABINET/CASEWORK ARE CONTRACTOR FURNISHED AND CONTRACTOR INSTALLED ITEMS.
2. FURNISH AND INSTALL EYEWASH PER V.A. SPECIFICATIONS.
3. SEE SPECIFICATIONS.

PIPING SYMBOLS:

GENERAL SYMB.	GENERAL DESCRIPTION	PIPING SYMB.	PIPING DESCRIPTION
XXX / X	EQUIPMENT TYPE / EQUIPMENT NO.		GAS COCK
	DETAIL NUMBER/SECTION LETTER		BALL VALVE
	DRAWING NUMBER WHERE DETAIL/SECTION TAKEN		CHECK VALVE
	DRAWING NUMBER WHERE DETAIL/SECTION SHOWN		CONCENTRIC REDUCER
1 1	SHEET NOTE		FLEXIBLE CONNECTOR
	POINT OF CONNECTION		GAS REGULATOR
	NEW		PRESSURE GAUGE
	EXISTING		TEMPERATURE GAUGE
	EXISTING PIPING OR EQUIPMENT TO BE DEMOLISHED		UNION
	UNDERGROUND OR BELOW CONCRETE SLAB SANITARY SEWER OR WASTE		BACKFLOW PREVENTER
	ABOVE GRADE SANITARY SEWER OR WASTE		SHUT-OFF VALVE
	CIRCULATING PUMP		PIPE-UP
	VENT		PIPE-DN
	PRESSURE AND TEMPERATURE RELIEF VALVE		PIPE DROP
	GAS NEEDLE VALVE		GAS NEEDLE VALVES
	BACK FLOW PREVENTOR ASSEMBLY		COLD WATER
			HOT WATER
			HOT WATER RETURN
			VENT

DRAWING INDEX:

200-P-70-0.0	PLUMBING GENERAL NOTES, ABBRECIATIONS, SYMBOLS, EQUIP. SCHEDULE AND DWN. INDEX.
200-P-70-0.1	DOMESTIC WATER ISOMETRIC
200-P-70-0.2	WASTE AND VENT ISOMETRIC
200-P-70-0.3	MEDICAL GASES ISOMETRIC
200-P-70-1.0	WASTE VENT AND DOMESTIC WATER NEW WORK PLAN.
200-P-70-2.0	MEDICAL GASES FIRST FLOOR AT CEILING SPACE NEW WORK PLAN.
200-P-70-2.1	MEDICAL GASES GROUND FLOOR AT CEILING SPACE NEW WORK PLAN.
200-P-70-3.0	FIRE PROTECTION NEW WORK PLAN.
200-P-70-4.0	PNEUMATIC SYSTEM PLAN AND DETAILS.
200-P-70-5.0	PIPING WASTE/VENT. MEDICAL GASES ISOMETRICS AND DETAILS.
200-PD-70-1.0	WASTE/VENT AND DOMESTIC WATER DEMOLITION PLAN.
200-PD-70-2.0	MEDICAL GASES DEMOLITION PLAN.
200-PD-70-3.0	FIRE PROTECTION DEMOLITION PLAN.

PLUMBING FIXTURE CONNECTION

MARK	DESCRIPTION	LOCATION	WASTE (INCH)	VENT (ICH)	CW(D) (INCH)	HW(D) (INCH)	REMARKS
S 1	SINK	DENTAL OPERATORY, DENTAL PERIODONTIC, DENTAL HYGIENE, PROSTHODONTIST OPERATORY, ENDODONTIC OPERATORY, SPECIAL OPERATORY.	2"	1½"	½"	½"	
S 2	SINK	SURGERY ROOMS	2"	1½"	½"	½"	
S 3	SINK	SURGERY ROOMS	2"	1½"	½"	½"	
S 4	SINK	SOILED ROOM	4"	2"	¾"	¾"	
S 5	SINK	SOILED ROOM	2"	2"	¾"	¾	
S 6	SINK	BREAK ROOM	2"	1½"	½"	½"	
S 7	SINK	LABORATORY (CLEAN)	2"	1½"	½"	½"	
S 8	SINK	LABORATORY (DENTAL)	2"	1½"	½"	½"	

Revisions:	Date
ISSUE FOR BID	04/17/12
ISSUE FOR 100% REVIEW	02/9/12
ISSUE FOR 95% REVIEW	12/9/11
ISSUE FOR 65% REVIEW	07/7/11
ISSUE FOR 35% REVIEW	03/24/11

CONSULTANTS:

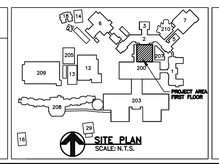

SITE PLAN
SCALE: N.T.S.

REGISTERED PROFESSIONAL ENGINEER
LORENZO A. RIOS CASTILLON
NO. M 21000
EXP. 06/30/2013
MECHANICAL
STATE OF CALIFORNIA

STAMP

ARCHITECT/ENGINEERS:

ADVANCE DESIGN CONSULTANTS, INC
PROFESSIONAL ENGINEERS
998 PARK AVENUE SAN JOSE, CA 95126
(408) 297-1881 FAX: (408) 294-3186
WWW.ADCENGINEERS.COM

ATTENTION:

ONLY WET SIGNED DOCUMENTS CONSTITUTE ADVANCE DESIGN CONSULTANTS, INC. PROFESSIONAL WORK AND BECAUSE OTHER REPRODUCIBLE DOCUMENTS MAY BE EASILY ALTERED WITHOUT THE CONSENT OF ADVANCE DESIGN CONSULTANTS, INC. THE WET SIGNED DOCUMENTS MUST BE REFERRED TO FOR THE ORIGINAL AND CORRECT INFORMATION. IF THERE ANY DIFFERENCES BETWEEN THE WET SIGNED DOCUMENTS AND ANY OTHER DOCUMENTS, THE WET SIGNED DOCUMENTS SHALL GOVERN.

ADVANCE DESIGN CONSULTANTS, INC. IS NOT RESPONSIBLE FOR ANY MODIFICATIONS MADE TO OUR DOCUMENTS BY ANYONE OTHER THAN AUTHORIZED REPRESENTATIVES OF ADVANCE DESIGN CONSULTANTS, INC.

Drawing Title:
PIPING GENERAL NOTES, ABBREVIATIONS, SYMBOLS, EQUIP. SCHEDULE AND DWG INDEX.

Approved Project Director:

Project Title:
BUILDING 200
DENTAL CLINIC

Location:
4150 CLEMENT ST. SAN FRANCISCO, CA

Date: NOVEMBER 2011
Checked: P. OCHOA
Drawn: J. AGUIRRE

Project Number: 662-11-108
Building Number: 200
Drawing Number: 200-P-70-0.0
Dwg. 24 of 44

Office of Construction and Facilities Management
Department of Veterans Affairs

VA FORM 08-6231

GENERAL NOTES:

1. FOR NEW WORK REFERENCE SEE DWG 200-P-70-1.0
2. FOR DEMOLITION REFEENCE SEE DWGB 200-PD-70-0.1

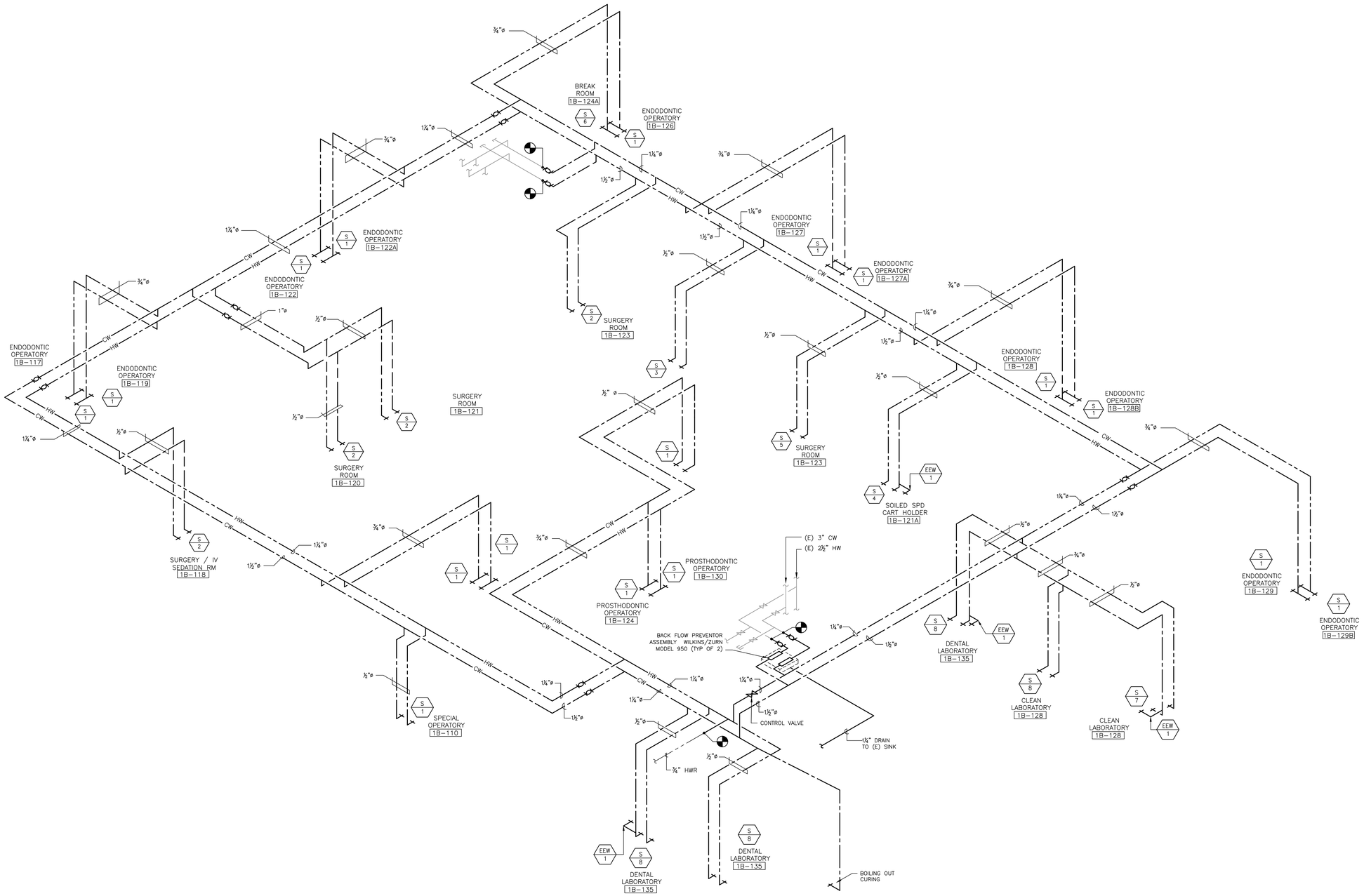

1 DOMESTIC WATER ISOMETRIC
SCALE: N.T.S. AT GROUND LEVEL CLG SPACE

Revisions:	Date
ISSUE FOR BID	04/17/12
ISSUE FOR 100% REVIEW	02/9/12
ISSUE FOR 95% REVIEW	12/9/11
ISSUE FOR 65% REVIEW	07/7/11
ISSUE FOR 35% REVIEW	03/24/11

CONSULTANTS:

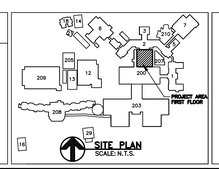

SITE PLAN
SCALE: N.T.S.

REGISTERED PROFESSIONAL ENGINEER LORENZO A. RIOS CASTELLON NO. M 21000 EXP. 06/30/2013 MECHANICAL STATE OF CALIFORNIA

STAMP

ARCHITECT/ENGINEERS:

ADVANCE DESIGN CONSULTANTS, INC
PROFESSIONAL ENGINEERS
998 PARK AVENUE SAN JOSE, CA 95126
(408) 297-1881 FAX: (408) 294-3186
WWW.ADCENGINEERS.COM

ATTENTION:
ONLY WET SIGNED DOCUMENTS CONSTITUTE ADVANCE DESIGN CONSULTANTS, INC. PROFESSIONAL WORK AND BECAUSE OTHER REPRODUCIBLE DOCUMENTS MAY BE EASILY ALTERED WITHOUT THE CONSENT OF ADVANCE DESIGN CONSULTANTS, INC., THE WET SIGNED DOCUMENTS MUST BE REFERRED TO FOR THE ORIGINAL AND CORRECT INFORMATION. IF THERE ANY DIFFERENCES BETWEEN THE WET SIGNED DOCUMENTS AND ANY OTHER DOCUMENTS, THE WET SIGNED DOCUMENTS SHALL GOVERN.
ADVANCE DESIGN CONSULTANTS, INC. IS NOT RESPONSIBLE FOR ANY MODIFICATIONS MADE TO OUR DOCUMENTS BY ANYONE OTHER THAN AUTHORIZED REPRESENTATIVES OF ADVANCE DESIGN CONSULTANTS, INC.

Drawing Title: DOMESTIC WATER ISOMETRIC

Approved Project Director:

Project Title: BUILDING 200 DENTAL CLINIC

Location: 4150 CLEMENT ST. SAN FRANCISCO, CA

Date: NOVEMBER 2011 | Checked: P. OCHOA | Drawn: J. AGUIRRE

Project Number: 662-11-108

Building Number: 200

Drawing Number: 200-P-70-0.1

Dwg. 25 of 44

Office of Construction and Facilities Management

Department of Veterans Affairs

VA FORM 08-6231

GENERAL NOTES:

1. FOR NEW WORK REFERENCE SEE DWG 200-P-70-1.0
2. FOR DEMOLITION REFEENCE SEE DWGB 200-PD-70-0.3

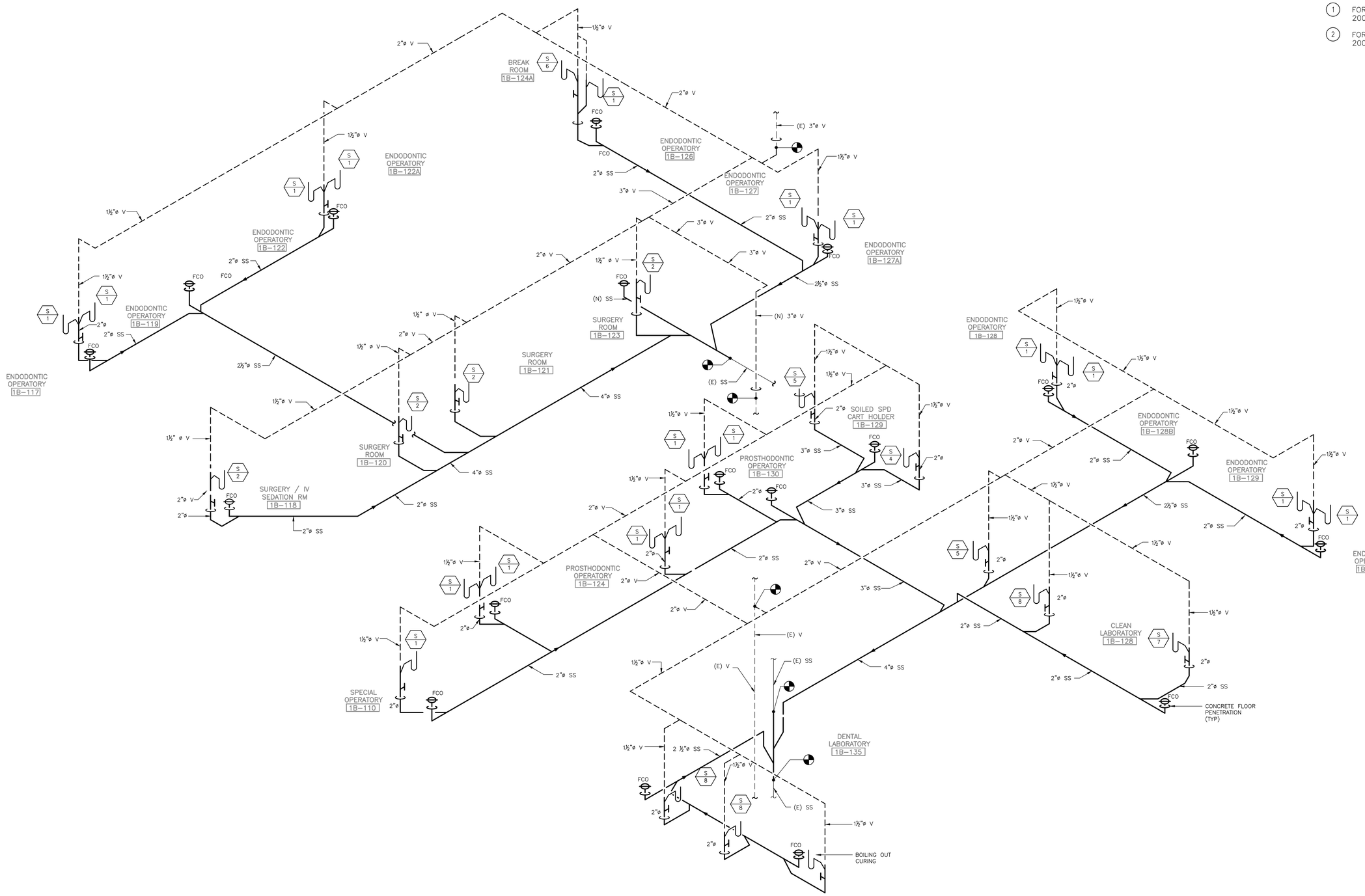

1 WASTE AND VENT ISOMETRIC
SCALE: N.T.S.

Revisions:	Date
ISSUE FOR BID	04/17/12
ISSUE FOR 100% REVIEW	02/9/12
ISSUE FOR 95% REVIEW	12/9/11
ISSUE FOR 65% REVIEW	07/7/11
ISSUE FOR 35% REVIEW	03/24/11

CONSULTANTS:

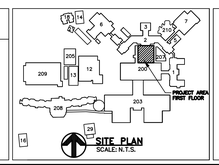

REGISTERED PROFESSIONAL ENGINEER LORENZO A. RIOS CASTELLON NO. M 21000 EXP. 06/30/2013 MECHANICAL STATE OF CALIFORNIA

STAMP

ARCHITECT/ENGINEERS:

ADVANCE DESIGN CONSULTANTS, INC
PROFESSIONAL ENGINEERS
998 PARK AVENUE SAN JOSE, CA 95126
(408) 297-1881 FAX: (408) 294-3186
WWW.ADCENGINEERS.COM

ATTENTION:
ONLY WET SIGNED DOCUMENTS CONSTITUTE ADVANCE DESIGN CONSULTANTS, INC. PROFESSIONAL WORK AND BECAUSE OTHER REPRODUCIBLE DOCUMENTS MAY BE EASILY ALTERED WITHOUT THE CONSENT OF ADVANCE DESIGN CONSULTANTS, INC., THE WET SIGNED DOCUMENTS MUST BE REFERRED TO FOR THE ORIGINAL AND CORRECT INFORMATION. IF THERE ANY DIFFERENCES BETWEEN THE WET SIGNED DOCUMENTS AND ANY OTHER DOCUMENTS, THE WET SIGNED DOCUMENTS SHALL GOVERN.

ADVANCE DESIGN CONSULTANTS, INC. IS NOT RESPONSIBLE FOR ANY MODIFICATIONS MADE TO OUR DOCUMENTS BY ANYONE OTHER THAN AUTHORIZED REPRESENTATIVES OF ADVANCE DESIGN CONSULTANTS, INC.

Drawing Title: WASTE AND VENT ISOMETRIC

Approved Project Director:

Project Title: BUILDING 200 DENTAL CLINIC

Location: 4150 CLEMENT ST. SAN FRANCISCO, CA

Date: NOVEMBER 2011 | Checked: P. OCHOA | Drawn: J. AGUIRRE

Project Number: 662-11-108

Building Number: 200

Drawing Number: 200-P-70-0.2

Dwg. 26 of 44

Office of Construction and Facilities Management

Department of Veterans Affairs

VA FORM 08-6231

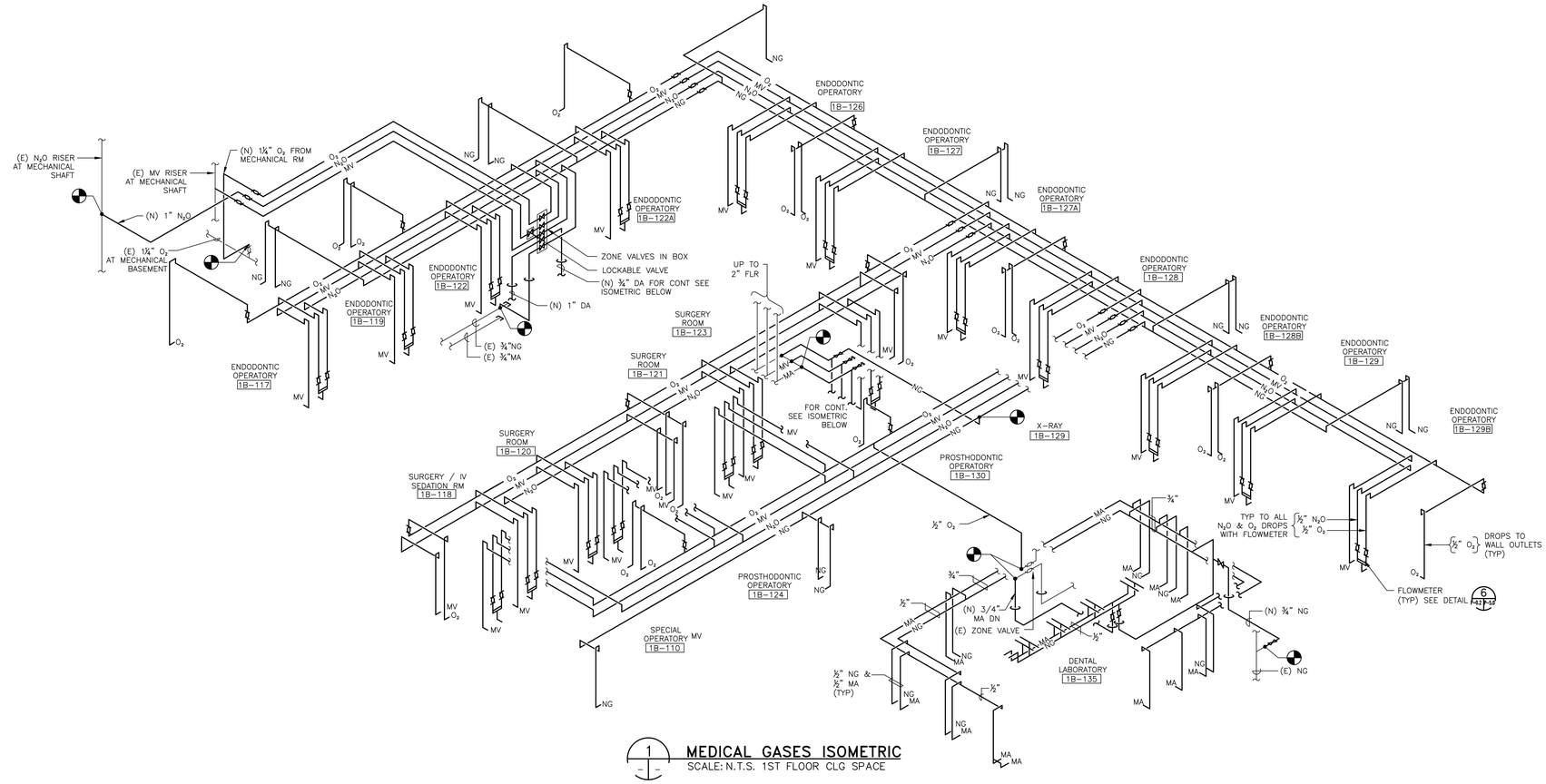

1 MEDICAL GASES ISOMETRIC
SCALE: N.T.S. 1ST FLOOR CLG SPACE

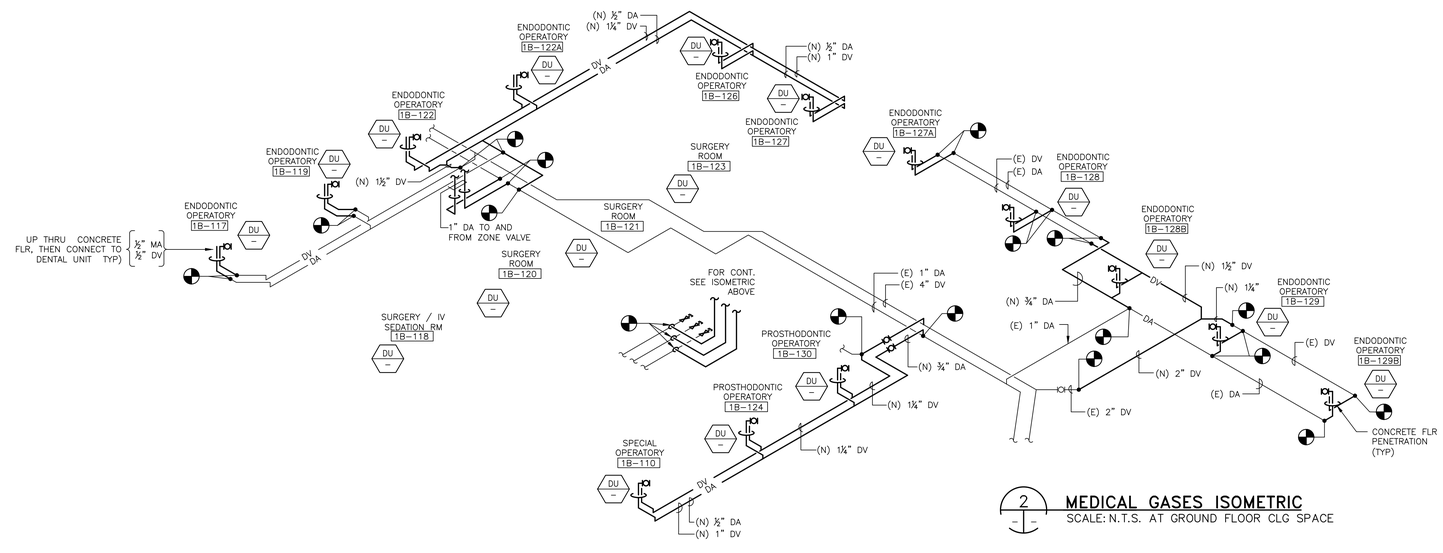

2 MEDICAL GASES ISOMETRIC
SCALE: N.T.S. AT GROUND FLOOR CLG SPACE

GENERAL NOTES:

1. FOR NEW WORK REFERENCE SEE DWG 200-P-70-2.0
2. FOR DEMOLITION REFEENCE SEE DWGB 200-PD-70-2.0

Revisions:	Date
ISSUE FOR BID	04/17/12
ISSUE FOR 100% REVIEW	02/9/12
ISSUE FOR 95% REVIEW	12/9/11
ISSUE FOR 65% REVIEW	07/7/11
ISSUE FOR 35% REVIEW	03/24/11

CONSULTANTS:

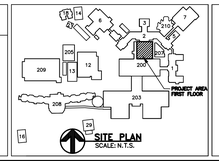

REGISTERED PROFESSIONAL ENGINEER LORENZO A. RIOS CASTILLON NO. M 21000 EXP. 06/30/2011 MECHANICAL STATE OF CALIFORNIA

STAMP

ARCHITECT/ENGINEERS:

ADVANCE DESIGN CONSULTANTS, INC
PROFESSIONAL ENGINEERS
998 PARK AVENUE SAN JOSE, CA 95126
(408) 297-1881 FAX: (408) 294-3186
WWW.ADCENGINEERS.COM

ATTENTION:
ONLY WET SIGNED DOCUMENTS CONSTITUTE ADVANCE DESIGN CONSULTANTS, INC. PROFESSIONAL WORK, AND BECAUSE OTHER REPRODUCIBLE DOCUMENTS MAY BE EASILY ALTERED WITHOUT THE CONSENT OF ADVANCE DESIGN CONSULTANTS, INC., THE WET SIGNED DOCUMENTS MUST BE REFERRED TO FOR THE ORIGINAL AND CORRECT INFORMATION. IF THERE ANY DIFFERENCES BETWEEN THE WET SIGNED DOCUMENTS AND ANY OTHER DOCUMENTS, THE WET SIGNED DOCUMENTS SHALL GOVERN.
ADVANCE DESIGN CONSULTANTS, INC. IS NOT RESPONSIBLE FOR ANY MODIFICATIONS MADE TO OUR DOCUMENTS BY ANYONE OTHER THAN AUTHORIZED REPRESENTATIVES OF ADVANCE DESIGN CONSULTANTS, INC.

Drawing Title: MEDICAL GASES ISOMETRIC

Approved Project Director:

Project Title: BUILDING 200 DENTAL CLINIC

Location: 4150 CLEMENT ST. SAN FRANCISCO, CA

Date: NOVEMBER 2011 | Checked: P OCHOA | Drawn: J.AGUIRRE

Project Number: 662-11-108

Building Number: 200

Drawing Number: 200-P-70-0.3

Dwg. 27 of 44

Office of Construction and Facilities Management

Department of Veterans Affairs

VA FORM 08-6231

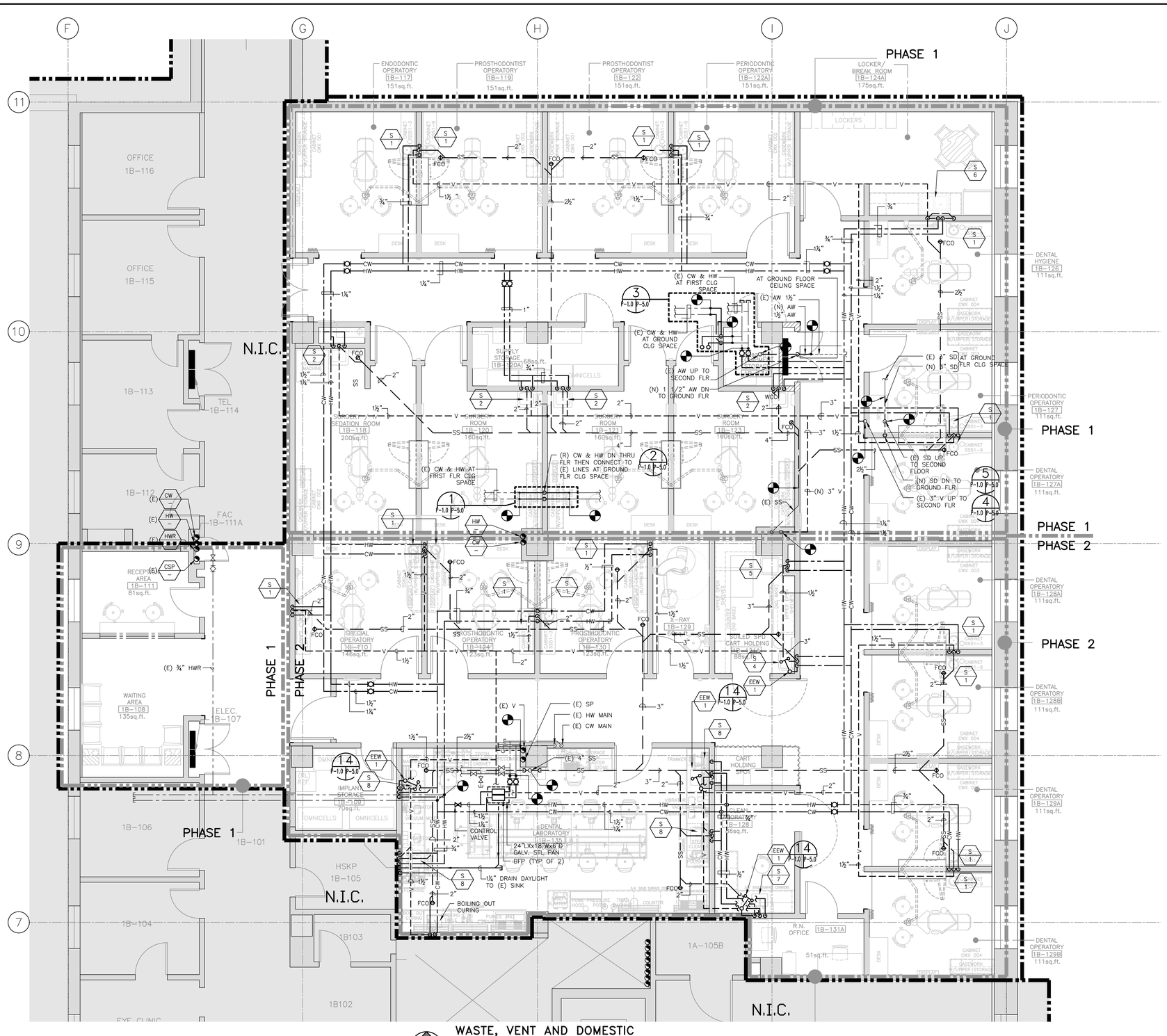

WASTE, VENT AND DOMESTIC WATER NEW WORK PLAN

SCALE: 1/4" = 1'-0"

SHEET NOTES:

1. ALL HORIZONTAL W OR SS SHALL HAVE 2% SLOPE.
2. REFER TO DWG 200-P-70-0.1 FOR W/V ISOMETRIC.
3. REFER TO DWG 200-P-70-0.3 FOR DW ISOMETRIC.
4. REFER TO DWG 200-P-70-5.0 FOR MISCELLANEOUS DETAILS.
5. COORDINATE PIPE PENETRATIONS THRU FLOOR WITH DENTAL CHAIR SUPPLIER TO DETERMINE THE EXACT LOCATION OF THE DV AND MA SUPPLIES.
6. COORDINATE EXACT LOCATIONS OF SINKS AND DETAIL CHAIR BEFORE EXTENDING FACILITY DROPS TO THE FIXTURES.

GENERAL NOTES:

1. SCAN CONCRETE FLOOR OR WALL BEFORE DRILLING TO AVOID CUTTING THE (E) STEEL REINFORCING BARS.

Revisions:	Date
ISSUE FOR BID	04/17/12
ISSUE FOR 100% REVIEW	02/9/12
ISSUE FOR 95% REVIEW	12/9/11
ISSUE FOR 65% REVIEW	07/7/11
ISSUE FOR 35% REVIEW	03/24/11

CONSULTANTS:

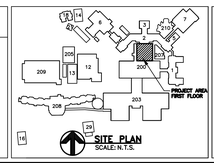

SITE PLAN
SCALE: N.T.S.

REGISTERED PROFESSIONAL ENGINEER LORENZO A. RIOS CASTILLO NO. M 21000 EXP. 06/30/2013 MECHANICAL STATE OF CALIFORNIA

STAMP

ARCHITECT/ENGINEERS:

ADVANCE DESIGN CONSULTANTS, INC
PROFESSIONAL ENGINEERS
998 PARK AVENUE SAN JOSE, CA 95126
(408) 297-1881 FAX: (408) 294-3186
WWW.ADCENGINEERS.COM

ATTENTION:
ONLY WET SIGNED DOCUMENTS CONSTITUTE ADVANCE DESIGN CONSULTANTS, INC. PROFESSIONAL WORK AND BECAUSE OTHER REPRODUCIBLE DOCUMENTS MAY BE EASILY ALTERED WITHOUT THE CONSENT OF ADVANCE DESIGN CONSULTANTS, INC., THE WET SIGNED DOCUMENTS MUST BE REFERRED TO FOR THE ORIGINAL AND CORRECT INFORMATION. IF THERE ANY DIFFERENCES BETWEEN THE WET SIGNED DOCUMENTS AND ANY OTHER DOCUMENTS, THE WET SIGNED DOCUMENTS SHALL GOVERN.
ADVANCE DESIGN CONSULTANTS, INC. IS NOT RESPONSIBLE FOR ANY MODIFICATIONS MADE TO OUR DOCUMENTS BY ANYONE OTHER THAN AUTHORIZED REPRESENTATIVES OF ADVANCE DESIGN CONSULTANTS, INC.

Drawing Title: WASTE, VENT AND DOMESTIC WATER NEW WORK PLAN.

Approved Project Director:

Project Title: BUILDING 200 DENTAL CLINIC

Location: 4150 CLEMENT ST. SAN FRANCISCO, CA

Date: NOVEMBER 2011 | Checked: P. OCHOA | Drawn: J. AGUIRRE

Project Number: 662-11-108

Building Number: 200

Drawing Number: 200-P-70-1.0

Dwg. 28 of 44

Office of Construction and Facilities Management

Department of Veterans Affairs

VA FORM 08-6231

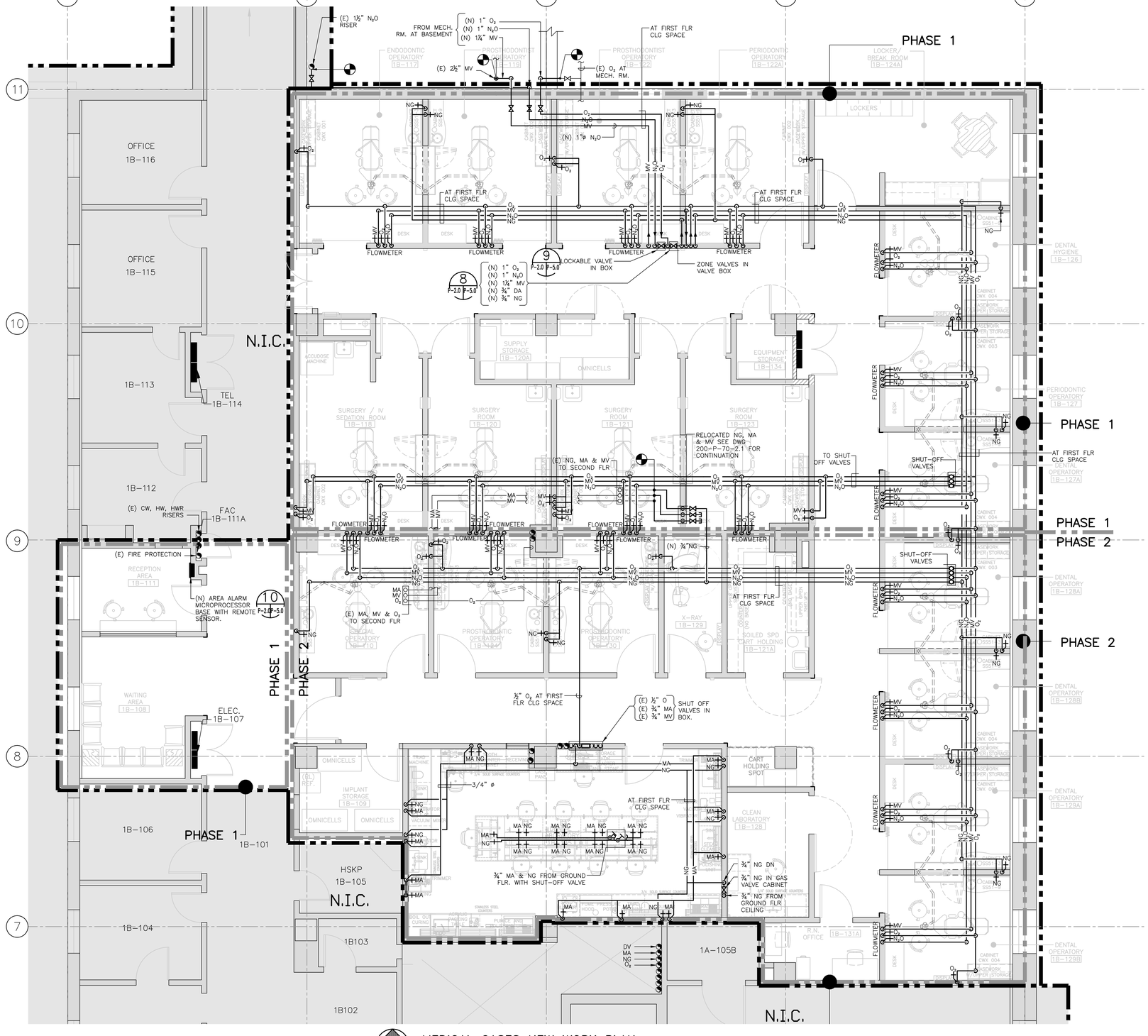

MEDICAL GASES NEW WORK PLAN

SCALE: 1/4" = 1'-0"

SHEET NOTES:

1. REFER TO DWG 200-P-70-0.0 FOR GENERAL NOTES.
2. REFER TO DWG 200-P-70-0.2 FOR MEDICAL GASSES ISOMETRICS AND DETAILS.
3. CONNECTIONS OF (N) GASSES TO (E) MIGHT REQUIRE CLOSING OF THE (E) MAIN VALVES. CONTRACTOR SHALL COORDINATE WITH THE PROJECT COORDINATOR AND INFORM VASF WHICH ROOMS WILL BE AFFECTED DURING SHUTTING DOWN OF THE SYSTEMS.
4. COORDINATE WITH THE USERS AND PROJECT COORDINATOR FOR EXACT LOCATION OF ALL MEDICAL GASSES.
5. CONTRACTOR SHALL PROVIDE AND INSTALL ALL MEDICAL GAS OUTLETS. THE OUTLETS SHALL BE "ALLIED CHEMETRON 560 SERIES".
6. CERTIFICATION: PROVIDE DOCUMENTATION PRIOR TO SUBMITTING REQUEST FOR FINAL INSPECTION TO INCLUDE ALL TEST RESULTS, THE NAME OF INDIVIDUALS PERFORMING WORK FOR THE TESTING AGENCY ON THIS PROJECT, DETAILED PROCEDURES FOR ALL TEST, AND A CERTIFICATION THAT ALL RESULTS OF TEST WERE WITHIN LIMITS ALLOWED BY THIS SPECIFICATION.
7. CONTRACTOR SHALL PROVIDE AND INSTALL A COMPLETE DIGITAL AREA ALARM SYSTEM INCLUDING SENSORS, ELECTRICAL CONDUIT AND WIRING FOR THE ENTIRE DENTAL CLINIC AREA. EACH MODULE SHALL BE PROVIDED WITH LED DIGITAL READ-OUT COMPRISING OF 0-250 PSI FOR PRESSURE AND 0-30" HG FOR VACUUM. EACH MODULE SHALL HAVE ALL FEATURES OF AN "AMICO ALERT-2" AND SHALL BE "AMICO CORPORATION MODEL No. AZAR-U-02V". OR APPROVED EQUAL.
8. THE FOLLOWING GAS SYSTEMS SHALL BE PROVIDED WITH COMPLETE ALARM SYSTEM.

   O_2
   N_2O
   MV
9. CONTRACTOR SHALL FAMILIARIZE HIMSELF ON O_2, N_2O, DV, AND MA (N) PIPING SYSTEMS LAY-OUT, POINT OF CONNECTION TO (E) SYSTEM FOR (N) SERVICE, ZONE VALVES LOCATION OF (E) N_2O CYLINDERS, N_2O MANIFOLDS PRIOR TO COMMENCING ANY ALARM SYSTEM WORK.
10. FLOWMETER SYSTEM.

    MXR-1 WALL MOUNT FLOWMETER. FLOWMETER PACKAGE WITH UNIVERSAL CONNECTIONS.

    PACKAGE INCLUDES:
    MXR-1 DIGITAL FLOWMETER.
    AVS-5000 VACUUM CONTROL.
    5155-3 BREATHING CIRCUIT.
    O_2 & N_2O SHUT-OFF VALVES.
    BAG TEE MOUNT, "PORTER"
    SLIDE MOUNT FOR CABINET (RUBBER GOODS).
    PACKAGE SHALL BE PORTER PIN 3465WF-AV.

    REFER TO DWG 200-P-70-5.0 FOR OPTION 1 AND 2 ON O_2, N_2O, AND MV SERVICE.

GENERAL NOTES:

1. SCAN CONCRETE FLOOR OR WALL BEFORE DRILLING TO AVOID CUTTING OF THE (E) STEEL REINFORCING.

Revisions:	Date
ISSUE FOR BID	04/17/12
ISSUE FOR 100% REVIEW	02/9/12
ISSUE FOR 95% REVIEW	12/9/11
ISSUE FOR 65% REVIEW	07/7/11
ISSUE FOR 35% REVIEW	03/24/11

CONSULTANTS:

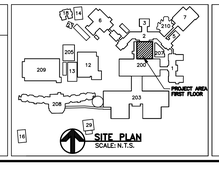

REGISTERED PROFESSIONAL ENGINEER LORENZO A. RIOS CASTILLO NO. M 21000 EXP. 06/30/2013 MECHANICAL STATE OF CALIFORNIA

STAMP

ARCHITECT/ENGINEERS:

ADVANCE DESIGN CONSULTANTS, INC
PROFESSIONAL ENGINEERS
998 PARK AVENUE SAN JOSE, CA 95126
(408) 297-1881 FAX: (408) 294-3186
WWW.ADCENGINEERS.COM

ATTENTION:
ONLY WET SIGNED DOCUMENTS CONSTITUTE ADVANCE DESIGN CONSULTANTS, INC. PROFESSIONAL WORK AND BECAUSE OTHER REPRODUCIBLE DOCUMENTS MAY BE EASILY ALTERED WITHOUT THE CONSENT OF ADVANCE DESIGN CONSULTANTS, INC., THE WET SIGNED DOCUMENTS MUST BE REFERRED TO FOR THE ORIGINAL AND CORRECT INFORMATION. IF THERE ANY DIFFERENCES BETWEEN THE WET SIGNED DOCUMENTS AND ANY OTHER DOCUMENTS, THE WET SIGNED DOCUMENTS SHALL GOVERN.

ADVANCE DESIGN CONSULTANTS, INC IS NOT RESPONSIBLE FOR ANY MODIFICATIONS MADE TO OUR DOCUMENTS BY ANYONE OTHER THAN AUTHORIZED REPRESENTATIVES OF ADVANCE DESIGN CONSULTANTS, INC.

Drawing Title: PIPING MEDICAL GASES AT FIRST FLOOR CEILING SPACE NEW WORK PLAN

Approved Project Director:

Project Title: BUILDING 200 DENTAL CLINIC

Location: 4150 CLEMENT ST. SAN FRANCISCO, CA

Date: NOVEMBER 2011 | Checked: P. OCHOA | Drawn: J. AGUIRRE

Project Number: 662-11-108

Building Number: 200

Drawing Number: 200-P-70-2.0

Dwg. 29 of 44

Office of Construction and Facilities Management

Department of Veterans Affairs

VA FORM 08-6231

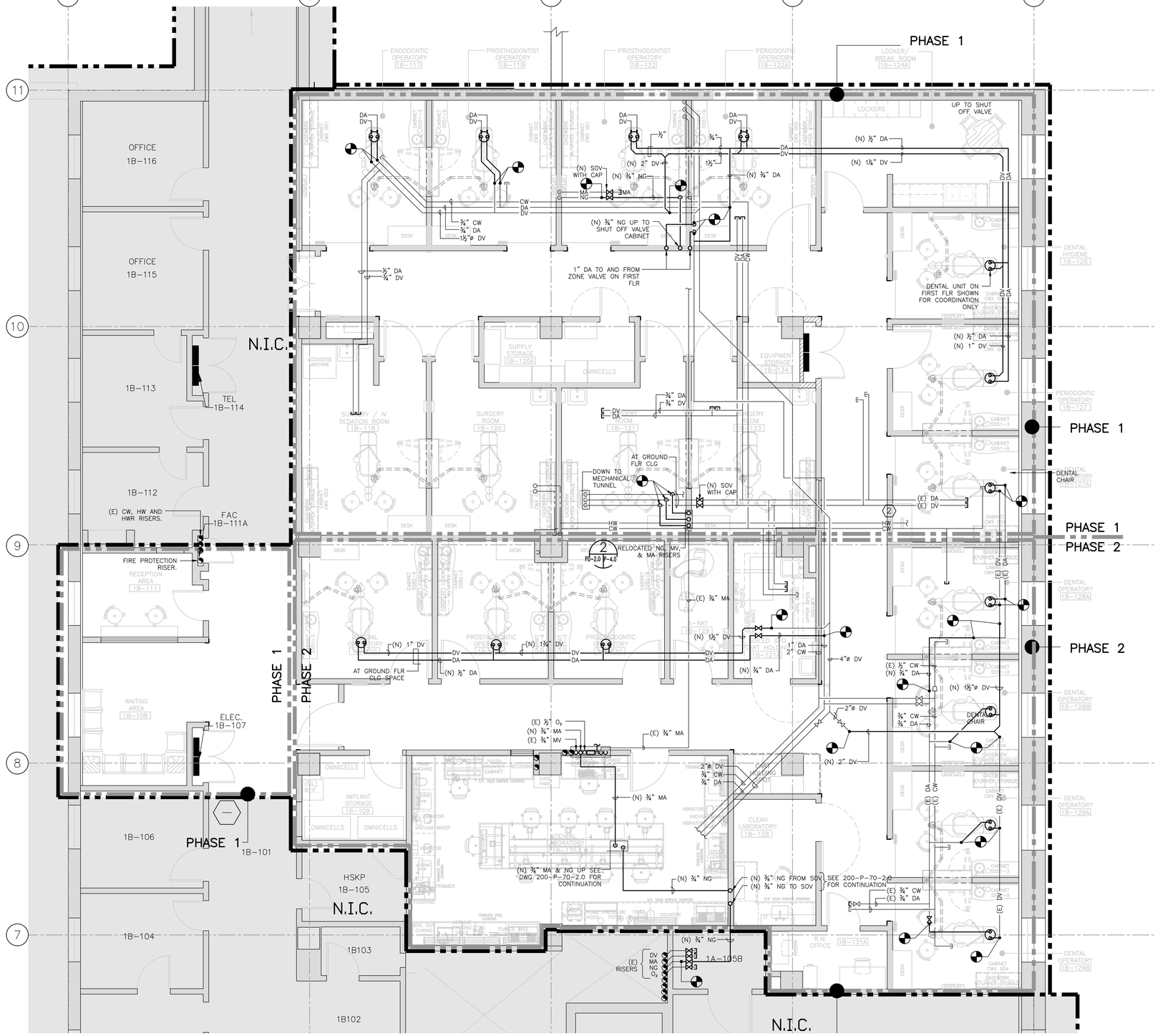

MEDICAL GASES NEW WORK PLAN
SCALE: 1/4" = 1'-0"

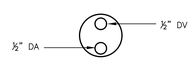

DENTAL UNIT
MEDICAL GASES SUPPLY
SCALE: N.T.S.

SHEET NOTES:

1. REFER TO DWG 200-P-70-0.0 FOR GENERAL NOTES.
2. REFER TO DWG 200-P-70-0.2 FOR MEDICAL GASSES ISOMETRICS AND DETAILS.
3. CONNECTIONS OF (N) GASSES TO (E) MIGHT REQUIRE CLOSING OF THE (E) MAIN VALVES. CONTRACTOR SHALL COORDINATE WITH THE PROJECT COORDINATOR AND INFORM VASF WHICH ROOMS WILL BE AFFECTED DURING SHUTTING DOWN OF THE SYSTEMS.
4. COORDINATE WITH THE USERS AND PROJECT COORDINATOR FOR EXACT LOCATION OF ALL MEDICAL GASSES.
5. CONTRACTOR SHALL PROVIDE AND INSTALL ALL MEDICAL GAS OUTLETS. THE OUTLETS SHALL BE "ALLIED CHEMETRON 560 SERIES".
6. CERTIFICATION: PROVIDE DOCUMENTATION PRIOR TO SUBMITTING REQUEST FOR FINAL INSPECTION TO INCLUDE ALL TEST RESULTS, THE NAME OF INDIVIDUALS PERFORMING WORK FOR THE TESTING AGENCY ON THIS PROJECT, DETAILED PROCEDURES FOR ALL TEST, AND A CERTIFICATION THAT ALL RESULTS OF TEST WERE WITHIN LIMITS ALLOWED BY THIS SPECIFICATION.
7. CONTRACTOR SHALL PROVIDE AND INSTALL A COMPLETE DIGITAL AREA ALARM SYSTEM INCLUDING SENSORS, ELECTRICAL CONDUIT AND WIRING FOR THE ENTIRE DENTAL CLINIC AREA. EACH MODULE SHALL BE PROVIDED WITH LED DIGITAL READ-OUT COMPRISING OF 0-250 PSI FOR PRESSURE AND 0-30" HG FOR VACUUM. EACH MODULE SHALL HAVE ALL FEATURES OF AN "AMICO ALERT-2" AND SHALL BE "AMICO CORPORATION MODEL No. AZAR-U-02V".
8. THE FOLLOWING GAS SYSTEMS SHALL BE PROVIDED WITH COMPLETE ALARM SYSTEM.

   O_2
   N_2O
   MV
9. CONTRACTOR SHALL FAMILIARIZE HIMSELF ON O_2, N_2O, DV, AND MA (N) PIPING SYSTEMS LAY-OUT, POINT OF CONNECTION TO (E) SYSTEM FOR (N) SERVICE, ZONE VALVES LOCATION OF (E) N_2O CYLINDERS, N_2O MANIFOLDS PRIOR TO COMMENCING ANY ALARM SYSTEM WORK.
10. FLOWMETER SYSTEM.

    MXR-1 CABINET MOUNT FLOWMETER. FLOWMETER PACKAGE WITH UNIVERSAL CONNECTIONS.

    PACKAGE INCLUDES:
    MXR-1 FLOWMETER.
    AVS-5000 VACUUM CONTROL.
    5155-3 BREATHING CIRCUIT.
    O_2 & N_2O SHUT-OFF VALVES.
    BACK TEE MOUNT, "PORTER"
    SLIDE MOUNT FOR CABINET (RUBBER GOODS).
    PACKAGE SHALL BE PORTER PIN 3465WF-AV.

    REFER TO DWG 200-P-70-5.0 FOR OPTION 1 AND 2 ON O_2, N_2O, AND MV SERVICE.

Revisions:	Date
ISSUE FOR BID	04/17/12
ISSUE FOR 100% REVIEW	02/9/12
ISSUE FOR 95% REVIEW	12/9/11
ISSUE FOR 65% REVIEW	07/7/11
ISSUE FOR 35% REVIEW	03/24/11

CONSULTANTS:

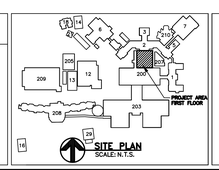

SITE PLAN
SCALE: N.T.S.

REGISTERED PROFESSIONAL ENGINEER
LORENZO A. RIOS CASTELLON
NO. M 21000
EXP. 06/30/2013
MECHANICAL
STATE OF CALIFORNIA
STAMP

ARCHITECT/ENGINEERS:

ADVANCE DESIGN CONSULTANTS, INC
PROFESSIONAL ENGINEERS
998 PARK AVENUE SAN JOSE, CA 95126
(408) 297-1881 FAX: (408) 294-3186
WWW.ADCENGINEERS.COM

ATTENTION:
ONLY WET SIGNED DOCUMENTS CONSTITUTE ADVANCE DESIGN CONSULTANTS, INC. PROFESSIONAL WORK AND BECAUSE OTHER REPRODUCIBLE DOCUMENTS MAY BE EASILY ALTERED WITHOUT THE CONSENT OF ADVANCE DESIGN CONSULTANTS, INC. THE WET SIGNED DOCUMENTS MUST BE REFERRED TO FOR THE ORIGINAL AND CORRECT INFORMATION. IF THERE ANY DIFFERENCES BETWEEN THE WET SIGNED DOCUMENTS AND ANY OTHER DOCUMENTS, THE WET SIGNED DOCUMENTS SHALL GOVERN.
ADVANCE DESIGN CONSULTANTS, INC. IS NOT RESPONSIBLE FOR ANY MODIFICATIONS MADE TO OUR DOCUMENTS BY ANYONE OTHER THAN AUTHORIZED REPRESENTATIVES OF ADVANCE DESIGN CONSULTANTS, INC.

Drawing Title:
PIPING
MEDICAL GASES AT GROUND FLOOR CEILING SPACE NEW WORK PLAN

Approved Project Director:

Project Title:
BUILDING 200
DENTAL CLINIC

Location:
4150 CLEMENT ST. SAN FRANCISCO, CA

Date: NOVEMBER 2011
Checked: P. OCHOA
Drawn: J. AGUIRRE

Project Number: 662-11-108
Building Number: 200
Drawing Number: 200-P-70-2.1
Dwg. 30 of 44

Office of Construction and Facilities Management
Department of Veterans Affairs

VA FORM 08-6231

FIRE PROTECTION NEW WORK PLAN

SCALE: 1/4" = 1'-0"

SHEET NOTES:

1. CONTRACTOR SHALL PROVIDE AND INSTALL (N) SPRINKLER HEAD SIMILAR (E)
2. ALL FIRE PROTECTION WORK SHALL BE IN COMPLIANCE WITH THE LATEST EDITION OF THE "NFPA", CITY OF SAN FRANCISCO, STATE OF CALIFORNIA AND "VASF" SPECIFICATIONS.
3. DURING CONSTRUCTION, IF THE (N) LOCATION OF THE (N) OR RELOCATED SPRINKLER HEAD INTERFERE WITH ELEC. LIGHTING FIXTURES, HVAC DIFFUSERS, AND MISC. STRUCTURAL MEMBERS, CONTRACTOR SHALL ADJUST THE LOCATION ACCORDINGLY. THE (N) LOCATION SHALL COVER THE AREA BEING SERVER AND SHALL BE IN COMPLIANCE WITH "NFPA", CITY OF SAN FRANCISCO, STATE OF CALIFORNIA AND "VASF" SPECIFICATIONS.
4. (N) SPRINKLER HEADS SHALL BE SIMILAR TO (E).
5. PROPOSED LOCATION OF SPRINKLER HEADS IS SHOWN FOR COORDINATION PURPOSE ONLY. CONTRACTOR IS RESPONSIBLE TO ENSURE SPRINKLER COVERAGE PER CODE.

LEGEND:

ESH	(E) SPRINKLER HEAD TO REMAIN.
RSH	RELOCATED SPRINKLER HEAD.
NSH	(N) SPRINKLER HEAD.

Revisions:	Date
ISSUE FOR BID	04/17/12
ISSUE FOR 100% REVIEW	02/9/12
ISSUE FOR 95% REVIEW	12/9/11
ISSUE FOR 65% REVIEW	07/7/11
ISSUE FOR 35% REVIEW	03/24/11

CONSULTANTS:

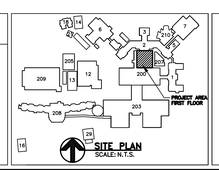

REGISTERED PROFESSIONAL ENGINEER LORENZO A. RIOS CASTILLON NO. M 21000 EXP. 06/30/2013 MECHANICAL STATE OF CALIFORNIA

STAMP

ARCHITECT/ENGINEERS:

ADVANCE DESIGN CONSULTANTS, INC
PROFESSIONAL ENGINEERS
998 PARK AVENUE SAN JOSE, CA 95126
(408) 297-1881 FAX: (408) 294-3186
WWW.ADCENGINEERS.COM

ATTENTION:

ONLY WET SIGNED DOCUMENTS CONSTITUTE ADVANCE DESIGN CONSULTANTS, INC. PROFESSIONAL WORK AND BECAUSE OTHER REPRODUCIBLE DOCUMENTS MAY BE EASILY ALTERED WITHOUT THE CONSENT OF ADVANCE DESIGN CONSULTANTS, INC., THE WET SIGNED DOCUMENTS MUST BE REFERRED TO FOR THE ORIGINAL AND CORRECT INFORMATION. IF THERE ANY DIFFERENCES BETWEEN THE WET SIGNED DOCUMENTS AND ANY OTHER DOCUMENTS, THE WET SIGNED DOCUMENTS SHALL GOVERN.

ADVANCE DESIGN CONSULTANTS, INC. IS NOT RESPONSIBLE FOR ANY MODIFICATIONS MADE TO OUR DOCUMENTS BY ANYONE OTHER THAN AUTHORIZED REPRESENTATIVES OF ADVANCE DESIGN CONSULTANTS, INC.

Drawing Title: FIRE PROTECTION NEW WORK PLAN.

Approved Project Director:

Project Title: BUILDING 200 DENTAL CLINIC

Location: 4150 CLEMENT ST. SAN FRANCISCO, CA

Date: NOVEMBER 2011 | Checked: P. OCHOA | Drawn: J. AGUIRRE

Project Number: 662-11-108

Building Number: 200

Drawing Number: 200-P-70-3.0

Dwg. 31 of 44

Office of Construction and Facilities Management

Department of Veterans Affairs

VA FORM 08-6231

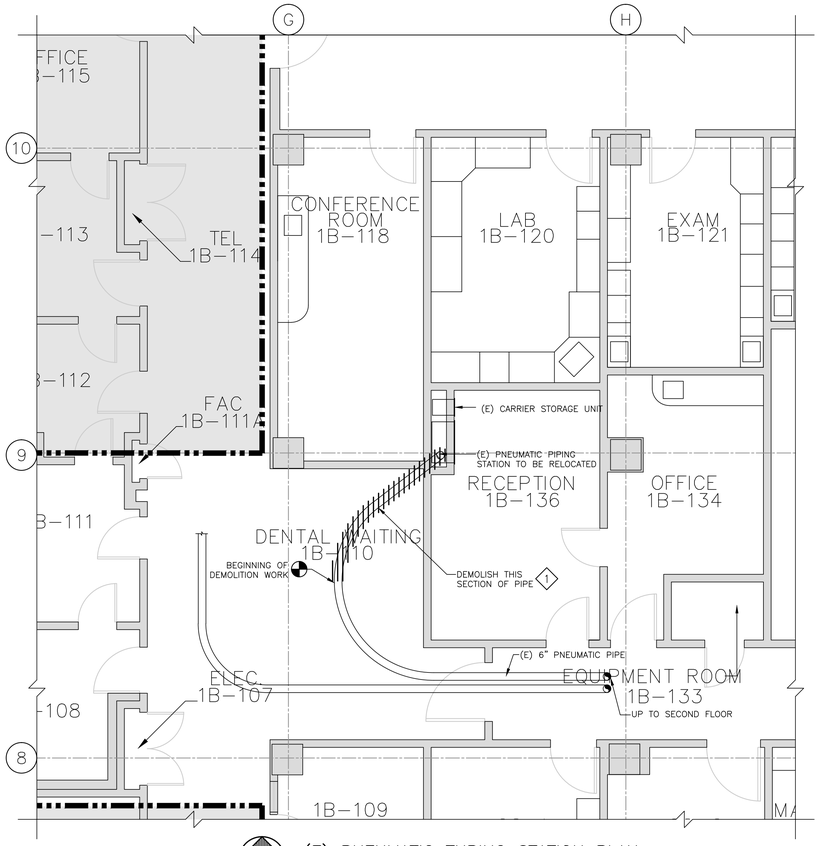

(E) PNEUMATIC TUBING STATION PLAN
SCALE: 1/4" = 1'-0"

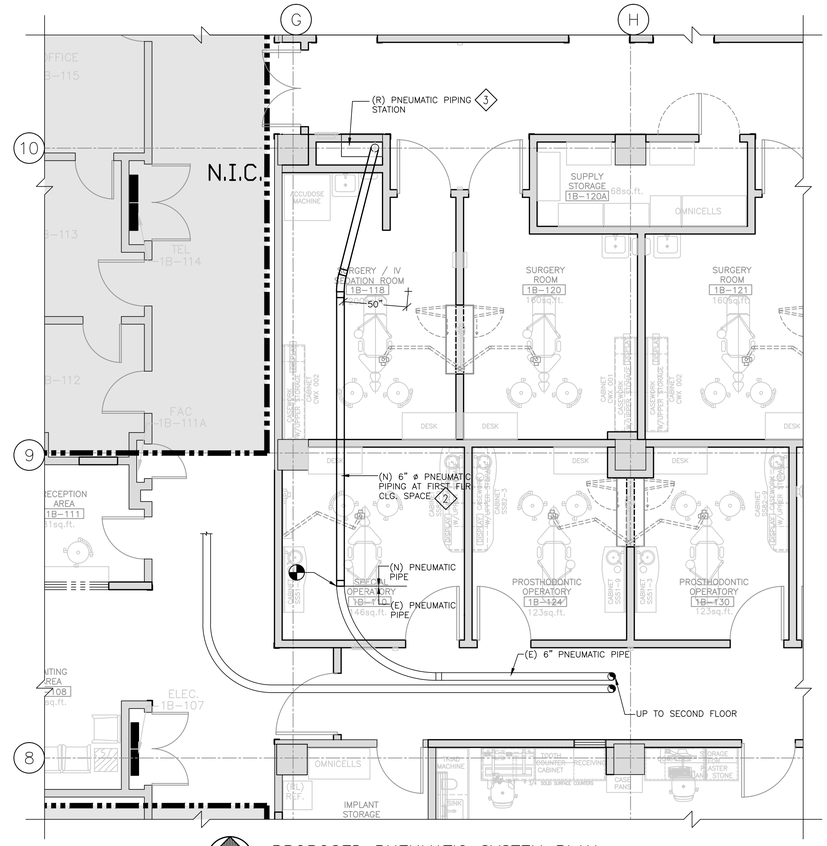

PROPOSED PNEUMATIC SYSTEM PLAN
SCALE: 1/4" = 1'-0"

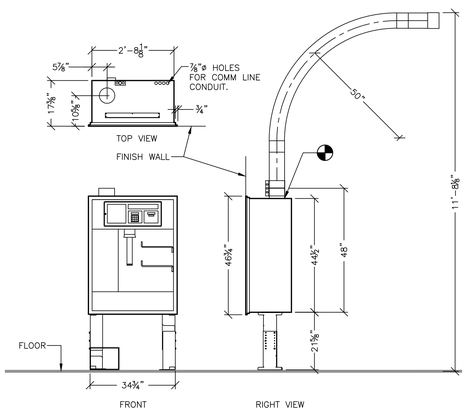

1 RELOCATED PNEUMATIC STATION MOUNTING DETAIL
SCALE: 1/2"=1'-0"

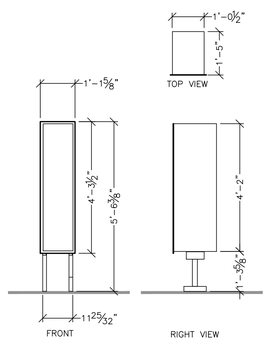

2 PNEUMATIC TUBE CARRIER STORAGE UNIT
SCALE: 1/2"=1'-0"

SHEET NOTES:

1. CONTRACTOR SHALL DISCONNECT AND REMOVE EXISTING PNEUMATIC TUBING STATION CAREFULLY FOR FUTURE REINSTALLATION.
2. CONTRACTOR SHALL USE 16-GAUGE GALVANIZE TUBE AND BENDS.
3. MECHANICAL CONTRACTOR SHALL COORDINATE WITH AN ELECTRICAL CONTRACTOR THE POWER SUPPLY AND COMMUNICATION CONDUITS.

Revisions:	Date
ISSUE FOR BID	04/17/12
ISSUE FOR 100% REVIEW	02/9/12
ISSUE FOR 95% REVIEW	12/9/11
ISSUE FOR 65% REVIEW	07/7/11
ISSUE FOR 35% REVIEW	03/24/11

CONSULTANTS:

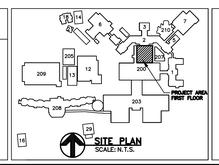

REGISTERED PROFESSIONAL ENGINEER
LORENZO A. RIOS CASTILLON
NO. M 21000
OR 06/30/2013
MECHANICAL
STATE OF CALIFORNIA
STAMP

ARCHITECT/ENGINEERS:

ADVANCE DESIGN CONSULTANTS, INC
PROFESSIONAL ENGINEERS
998 PARK AVENUE SAN JOSE, CA 95126
(408) 297-1881 FAX: (408) 294-3186
WWW.ADCENGINEERS.COM

ATTENTION:

ONLY WET SIGNED DOCUMENTS CONSTITUTE ADVANCE DESIGN CONSULTANTS, INC. PROFESSIONAL WORK AND BECAUSE OTHER REPRODUCIBLE DOCUMENTS MAY BE EASILY ALTERED WITHOUT THE CONSENT OF ADVANCE DESIGN CONSULTANTS, INC., THE WET SIGNED DOCUMENTS MUST BE REFERRED TO FOR THE ORIGINAL AND CORRECT INFORMATION. IF THERE ANY DIFFERENCES BETWEEN THE WET SIGNED DOCUMENTS AND ANY OTHER DOCUMENTS, THE WET SIGNED DOCUMENTS SHALL GOVERN.

ADVANCE DESIGN CONSULTANTS, INC. IS NOT RESPONSIBLE FOR ANY MODIFICATIONS MADE TO OUR DOCUMENTS BY ANYONE OTHER THAN AUTHORIZED REPRESENTATIVES OF ADVANCE DESIGN CONSULTANTS, INC.

Drawing Title: PNEUMATIC SYSTEM RELOCATION PLAN AND DETAILS.

Approved Project Director:

Project Title: BUILDING 200 DENTAL CLINIC

Location: 4150 CLEMENT ST. SAN FRANCISCO, CA

Date: NOVEMBER 2011 | Checked: P. OCHOA | Drawn: J. AGUIRRE

Project Number: 662-11-108

Building Number: 200

Drawing Number: 200-P-70-4.0

Dwg. 32 of 44

Office of Construction and Facilities Management

Department of Veterans Affairs

VA FORM 08-6231

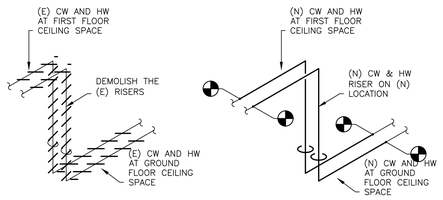

1 ISOMETRIC
P-5.0 PD-1.0 SCALE: NTS

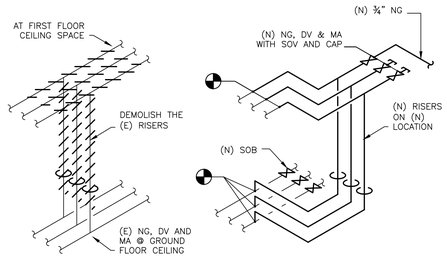

2 ISOMETRIC
P-5.0 PD-1.0 SCALE: NTS

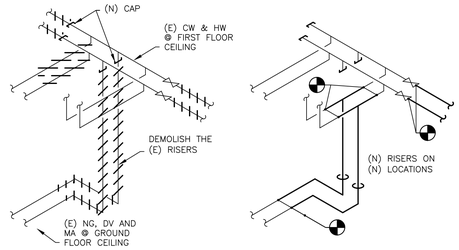

3 ISOMETRIC
P-5.0 PD-1.0 SCALE: NTS

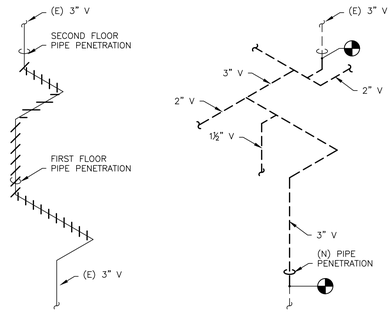

4 ISOMETRIC
P-5.0 PD-1.0 SCALE: NTS

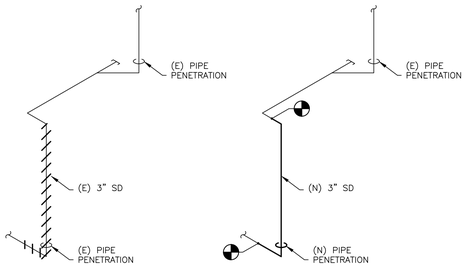

5 ISOMETRIC
P-5.0 PD-1.0 SCALE: NTS

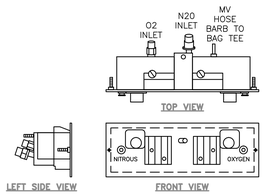

CONNECTIONS:

ALL NITROUS OXIDE LINES ARE ⅜" O.D. COPPER PIPING
ALL OXYGEN LINES ARE ½" O.D.
COPPER PIPING. USE D.I.S.S. FITTINGS TO CONNECT STUBS TO FLOWMETER.
NOTE: D.I.S.S. FITTINGS MUST BE ACCESSIBLE

THIS IS A TYPICAL UNIT.
REFER TO MANUFACTURER'S INSTALLATION LITERATURE TO VERIFY REQUIREMENTS.

1 WALLMOUNT FLOWMETER

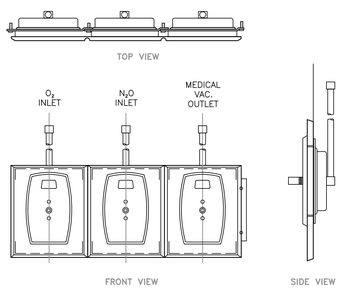

2 TRIPLE OUTLET

6 TYPICAL O_2, N_2O & MV SERVICE DETAIL
P-5.0 P-2.0 SCALE: NTS

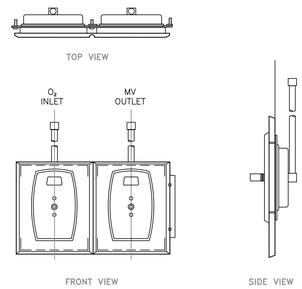

7 TYPICAL O_2 & MV OUTLET DETAIL
P-5.0 P-2.0 SCALE: NTS

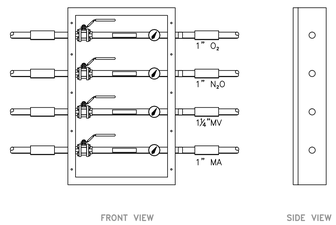

8 TYPICAL ZONE VALVE BOX DETAIL
P-5.0 P-2.0 SCALE: N.T.S.

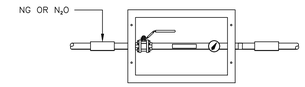

9 TYPICAL NG AND N_2O (LOCKABLE) VALVE BOX
P-5.0 P-2.0 SCALE: N.T.S.

OPTIONS FOR O_2, N_2O AND MV SERVICE.

OPTION No. 1: 18 FLOWMETERS.
PROVIDE AND INSTALL FLOWMETER AS SHOWN ON DETAIL ON EACH ROOM AS SHOWN ON PLAN. (6 P-5.0 P-2.0 1)

OPTION No. 2: 4 FLOWMETERS AND 14 TRIPLE OUTLETS.

a. PROVIDE AND INSTALL FLOWMETER AS SHOWN IN DETAILS (TOTAL 4) AT THE SURGERY ROOMS.

b. PROVIDE AND INSTALL OUTLETS AS SHOWN IN DETAIL (TOTAL OF 14) IN THE REST OF THE ROOMS. (6 P-5.0 P-2.0 2)

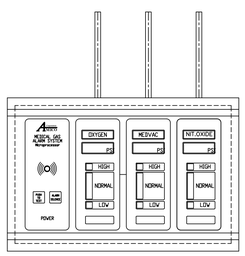

MODULE

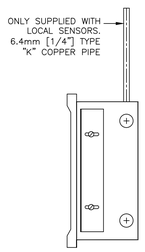

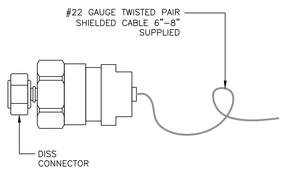

LOCAL/REMOTE SENSOR

10 COMBINATION ALARM AREA/MASTER
P-5.0 P-2.0 SCALE: NTS

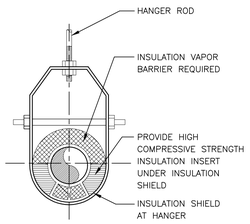

ADJUSTABLE CLEVIS HANGER

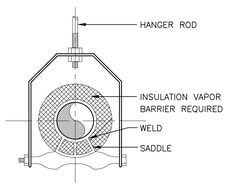

ADJUSTABLE ROLLER HANGER

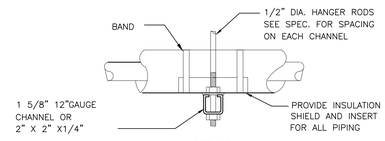

TRAPEZE HANGER FOR UP TO 1000 LB. UNIFORM LOAD

11 PIPE HANGER
P-5.0 P-1.0 SCALE: NONE

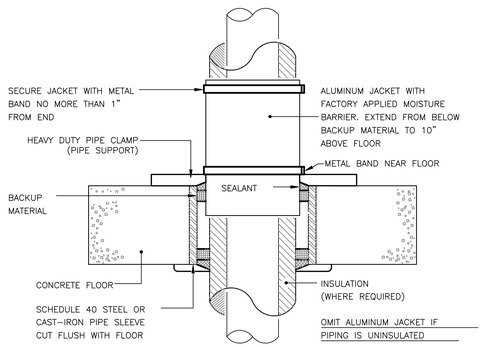

12 FLOOR PIPE PENETRATION DETAIL
P-5.0 P-2.0 SCALE: NTS

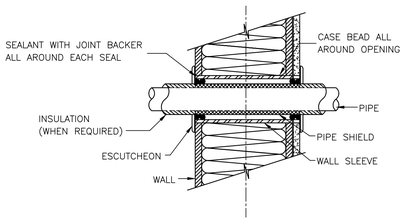

13 PIPE THRU WALL
P-5.0 P-1.0 SCALE: NONE

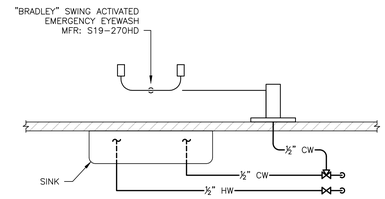

14 EMERGENCY EYEWASH DETAIL
P-5.0 P-2.0 SCALE: N.T.S.

Revisions:	Date
ISSUE FOR BID	04/17/12
ISSUE FOR 100% REVIEW	02/9/12
ISSUE FOR 95% REVIEW	12/9/11
ISSUE FOR 65% REVIEW	07/7/11
ISSUE FOR 35% REVIEW	03/24/11

CONSULTANTS:

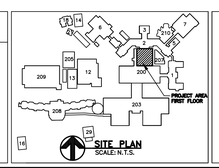

REGISTERED PROFESSIONAL ENGINEER LORENZO A. RIOS CASTILLON NO. M 21000 EXP. 06/30/2013 MECHANICAL STATE OF CALIFORNIA

STAMP

ARCHITECT/ENGINEERS:

ADVANCE DESIGN CONSULTANTS, INC
PROFESSIONAL ENGINEERS
998 PARK AVENUE SAN JOSE, CA 95126
(408) 297-1881 FAX: (408) 294-3186
WWW.ADCENGINEERS.COM

ATTENTION:

ONLY WET SIGNED DOCUMENTS CONSTITUTE ADVANCE DESIGN CONSULTANTS, INC. PROFESSIONAL WORK AND BECAUSE OTHER REPRODUCIBLE DOCUMENTS MAY BE EASILY ALTERED WITHOUT THE CONSENT OF ADVANCE DESIGN CONSULTANTS, INC., THE WET SIGNED DOCUMENTS MUST BE REFERRED TO FOR THE ORIGINAL AND CORRECT INFORMATION. IF THERE ANY DIFFERENCES BETWEEN THE WET SIGNED DOCUMENTS AND ANY OTHER DOCUMENTS, THE WET SIGNED DOCUMENTS SHALL GOVERN.

ADVANCE DESIGN CONSULTANTS, INC. IS NOT RESPONSIBLE FOR ANY MODIFICATIONS MADE TO OUR DOCUMENTS BY ANYONE OTHER THAN AUTHORIZED REPRESENTATIVES OF ADVANCE DESIGN CONSULTANTS, INC.

Drawing Title: PIPING WASTE/VENT, MEDICAL GASES ISOMETRICS AND DETAILS.

Approved Project Director:

Project Title: BUILDING 200 DENTAL CLINIC

Project Number: 662-11-108

Building Number: 200

Location: 4150 CLEMENT ST. SAN FRANCISCO, CA

Drawing Number: 200-P-70-5.0

Date: NOVEMBER 2011 | Checked: P. OCHOA | Drawn: J. AGUIRRE

Dwg. 33 of 44

Office of Construction and Facilities Management

Department of Veterans Affairs

VA FORM 08-6231

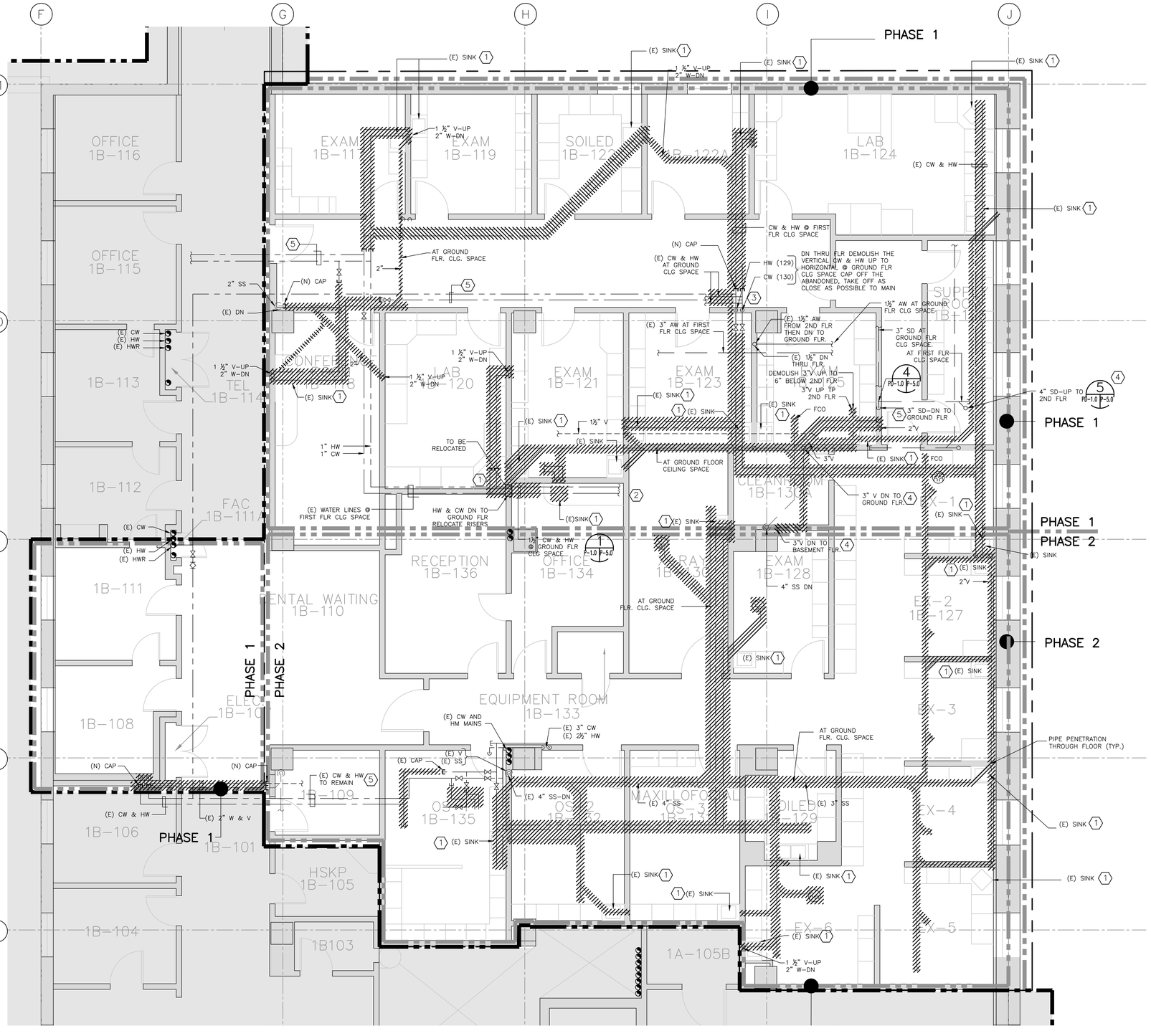

WASTE/VENT AND DOMESTIC WATER DEMOLITION PLAN

SCALE: 1/4" = 1'-0"

DEMOLITION NOTES:

1. DEMOLISH THE (E) SINK AND PERFORM THE FOLLOWING TO UTILITIES SERVING THE SINK.
   - a. WASTE: DEMOLISH THE LINE FROM THE SINK UP TO MAIN LOCATED BELOW THE FIRST FLOOR CONCRETE SLAB.
   - b. VENT: DEMOLISH THE LINE FROM THE SINK UP TO MAIN LOCATED AT FIRST FLOOR CEILING SPACE.
   - c. COLD WATER AND HOT WATER: DEMOLISH THE LINES FROM THE SINK UP TO MAIN AT FIRST FLOOR CEILING SPACE.
   - d. UNLESS NOTED THE ABANDONED WASTE AND VENT LINES SHALL BE PROVIDED WITH (N) CAP AT CEILING AREA.
   - e. UNLESS NOTED THE ABANDONED COLD AND HOT WATER LINES SHALL BE PROVIDED WITH (N) VALVE AND CAP AT CEILING AREA.
2. ALL (E) PIPE PENETRATION THRU CONCRETE FLOOR SHALL BE PATCHED AND REPAIRED WITH MATERIAL SIMILAR TO (E).
3. UNLESS NOTED, ALL PLUMBING SYSTEMS SERVING THE DENTAL AREA, INCLUDING THE HORIZONTAL DRAINS AT GROUND FLOOR CEILING SPACE SHALL BE DEMOLISHED.
4. ALL PLUMBING PIPING INCLUDING CW, HW, SS, SD, V, O_2, MA, DV, N_2O SERVING FLOORS ABOVE FIRST WITH RAISERS THAT WILL BE EXPOSED WHEN (E) WALLS ARE DEMOLISH SHALL BE RELOCATED TO NEAREST NEWLY CONSTRUCTED WALL. THESE RISERS SHALL BE THEN RECONNECTED TO RESTORE NORMAL OPERATIONS.
5. SOME ADJACENT ROOMS NOT WITHIN THE PROJECT AREA ARE RECEIVING W/V AND DW FROM THE EXISTING W/V AND DW LINES THAT ARE TO BE DEMOLISHED. CONTRACTOR SHALL LOOK FOR ANOTHER SERVICE OF W/V AND DW TO AVOID INTERRUPTION AND TO MAINTAIN CONTINUOUS SERVICE TO THE AFFECTED AREAS.

Revisions:	Date
ISSUE FOR BID	04/17/12
ISSUE FOR 100% REVIEW	02/9/12
ISSUE FOR 95% REVIEW	12/9/11
ISSUE FOR 65% REVIEW	07/7/11
ISSUE FOR 35% REVIEW	03/24/11

VA FORM 08-6231

CONSULTANTS:

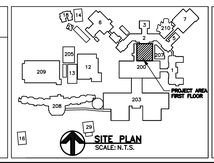

SITE PLAN
SCALE: N.T.S.

REGISTERED PROFESSIONAL ENGINEER
MARCELO A. RIOS CASTILLON
NO. M 21000
EXP. 06/30/2013
MECHANICAL
STATE OF CALIFORNIA

STAMP

ARCHITECT/ENGINEERS:

ADVANCE DESIGN CONSULTANTS, INC
PROFESSIONAL ENGINEERS
998 PARK AVENUE SAN JOSE, CA 95126
(408) 297-1881 FAX: (408) 294-3186
WWW.ADCENGINEERS.COM

ATTENTION:
ONLY WET SIGNED DOCUMENTS CONSTITUTE ADVANCE DESIGN CONSULTANTS, INC. PROFESSIONAL WORK AND BECAUSE OTHER REPRODUCIBLE DOCUMENTS MAY BE EASILY ALTERED WITHOUT THE CONSENT OF ADVANCE DESIGN CONSULTANTS, INC., THE WET SIGNED DOCUMENTS MUST BE REFERRED TO FOR THE ORIGINAL AND CORRECT INFORMATION. IF THERE ANY DIFFERENCES BETWEEN THE WET SIGNED DOCUMENTS AND ANY OTHER DOCUMENTS, THE WET SIGNED DOCUMENTS SHALL GOVERN.
ADVANCE DESIGN CONSULTANTS, INC. IS NOT RESPONSIBLE FOR ANY MODIFICATIONS MADE TO OUR DOCUMENTS BY ANYONE OTHER THAN AUTHORIZED REPRESENTATIVES OF ADVANCE DESIGN CONSULTANTS, INC.

Drawing Title: WASTE/VENT AND DOMESTIC WATER DEMOLITION PLAN

Approved Project Director:

Project Title: BUILDING 200 DENTAL CLINIC

Location: 4150 CLEMENT ST. SAN FRANCISCO, CA

Date: NOVEMBER 2011 | Checked: P. OCHOA | Drawn: J. AGUIRRE

Project Number: 662-11-108

Building Number: 200

Drawing Number: 200-PD-70-1.0

Dwg. 34 of 44

Office of Construction and Facilities Management

Department of Veterans Affairs

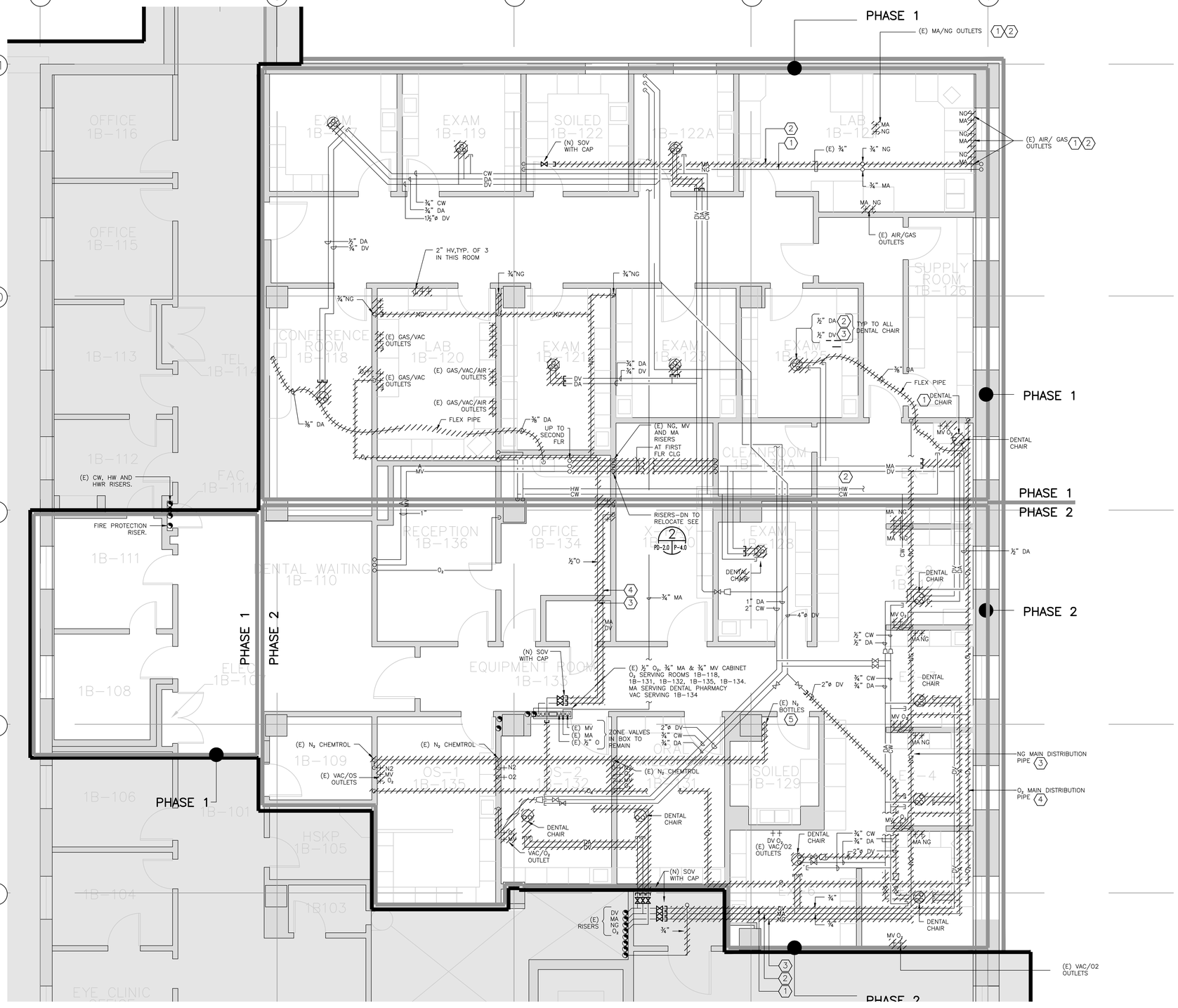

MEDICAL GASES DEMOLITION PLAN

SCALE: 1/4" = 1'-0"

DEMOLITION NOTES:

1. DEMOLISH THE (E) NG PIPING SYSTEM FROM MAIN @ GROUND FLR. CLG. SPACE UP TO DENTAL CHAIRS, BUNSEN BURNERS AND WALL OUTLETS.
2. DEMOLISH THE (E) MA PIPING SYSTEM FROM THE MAIN @ GROUND FLR. CLG. SPACE UP TO DENTAL CHAIRS AND WALL OUTLETS.
3. DEMOLISH THE (E) MV AND DV PIPING SYSTEM FROM MAIN @ GROUND FLR. CLG SPACE UP TO DENTAL CHAIRS AND WALL OUTLETS.
4. DEMOLISH THE (E) O_2 PIPING SYSTEM FROM OVERHEAD MAIN UP TO WALL OUTLETS.
5. DEMOLISH THE (E) N_2 PIPING SYSTEM FROM N_2 BOTTLES IN ROOM 1B-129 UP TO WALL OUTLETS IN ROOM 1B-135, RM-1B-132 AND RM-131.
6. CONTRACTOR SHALL FIELD VERIFY EXTENT OF LINES TO BE REMOVED BEFORE COMMENCING DEMOLITION WORK. CONTRACTOR SHALL NOTIFY COTR IF ANY LINE TO BE DEMOLISHED APPEARS TO SERVE ROOMS OUTSIDE OF THE PROJECT AREA TO PREVENT INTERRUPTION OF GAS/VACUUM SERVICE TO OTHERS.
7. ABANDONED PIPE PENETRATIONS (WILL NOT BE USED BY NEW WORK) SHALL BE FILLED IN WITH CONCRETE, FLOOR SEALED AND FINISH TO ACCEPT NEW FLOORING.

Revisions:	Date
ISSUE FOR BID	04/17/12
ISSUE FOR 100% REVIEW	02/9/12
ISSUE FOR 95% REVIEW	12/9/11
ISSUE FOR 65% REVIEW	07/7/11
ISSUE FOR 35% REVIEW	03/24/11

CONSULTANTS:

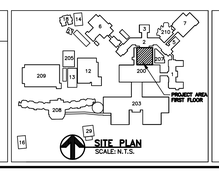

SITE PLAN
SCALE: N.T.S.

STAMP

ARCHITECT/ENGINEERS:

ADVANCE DESIGN CONSULTANTS, INC
PROFESSIONAL ENGINEERS
998 PARK AVENUE SAN JOSE, CA 95126
(408) 297-1881 FAX: (408) 294-3186
WWW.ADCENGINEERS.COM

ATTENTION:
ONLY WET SIGNED DOCUMENTS CONSTITUTE ADVANCE DESIGN CONSULTANTS, INC. PROFESSIONAL WORK AND BECAUSE OTHER REPRODUCIBLE DOCUMENTS MAY BE EASILY ALTERED WITHOUT THE CONSENT OF ADVANCE DESIGN CONSULTANTS, INC., THE WET SIGNED DOCUMENTS MUST BE REFERRED TO FOR ACCURATE AND CORRECT INFORMATION. IF THERE ANY DIFFERENCES BETWEEN THE WET SIGNED DOCUMENTS AND ANY OTHER DOCUMENTS, THE WET SIGNED DOCUMENTS SHALL GOVERN.

ADVANCE DESIGN CONSULTANTS, INC. IS NOT RESPONSIBLE FOR ANY MODIFICATIONS MADE TO OUR DOCUMENTS BY ANYONE OTHER THAN AUTHORIZED REPRESENTATIVES OF ADVANCE DESIGN CONSULTANTS, INC.

Drawing Title: MEDICAL GASES DEMOLITION PLAN

Approved Project Director:

Project Title: BUILDING 200 DENTAL CLINIC

Location: 4150 CLEMENT ST. SAN FRANCISCO, CA

Date: NOVEMBER 2011 | Checked: P. OCHOA | Drawn: J. AGUIRRE

Project Number: 662-11-108

Building Number: 200

Drawing Number: 200-PD-70-2.0

Dwg. 35 of 44

Office of Construction and Facilities Management

Department of Veterans Affairs

VA FORM 08-6231

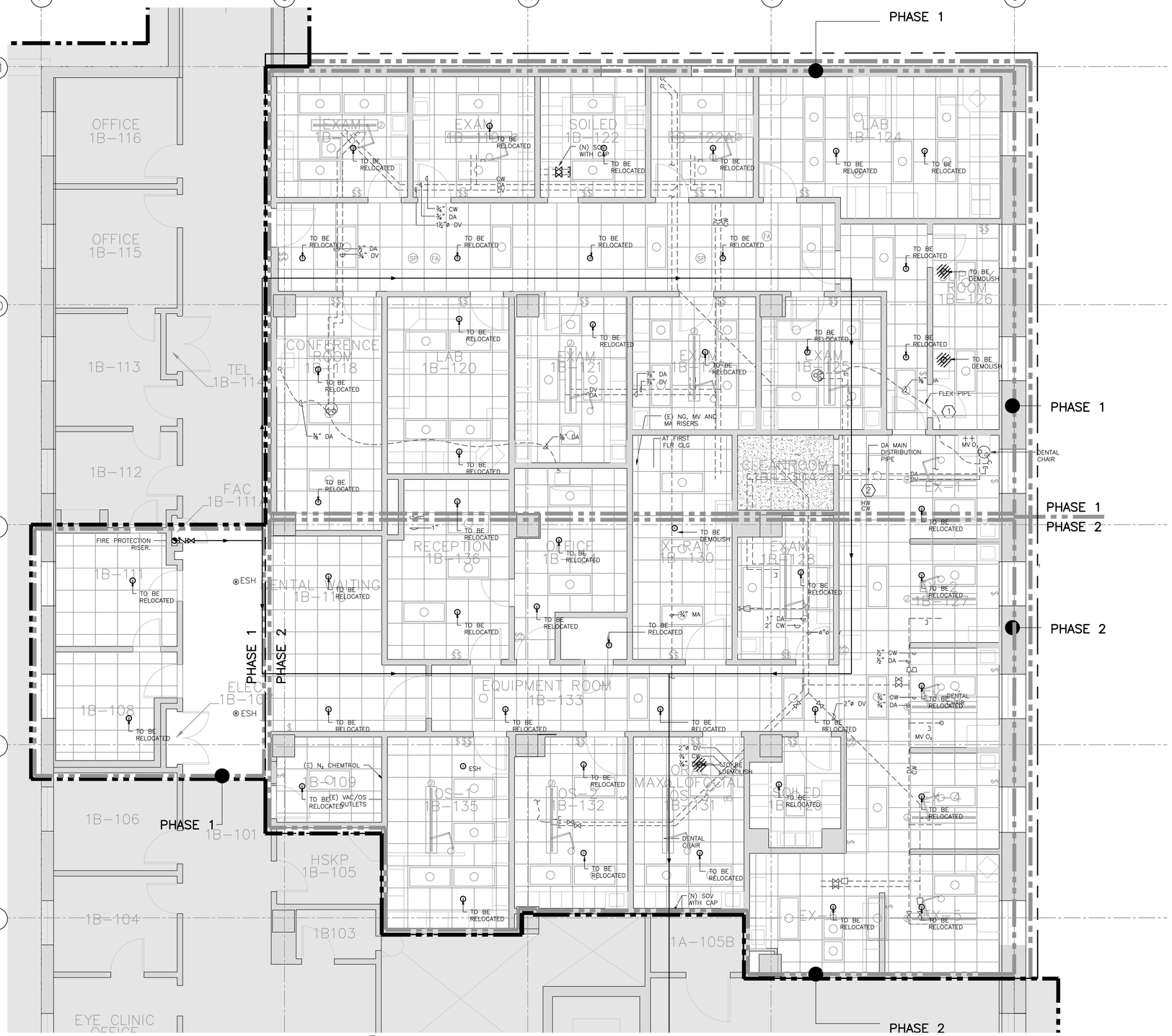

FIRE PROTECTION DEMOLITION PLAN

SCALE: 1/4" = 1'-0"

DEMOLITION NOTES:

1. CONTRACTOR SHALL RELOCATE OR DEMOLISH THE (E) SPRINKLER HEADS TO SERVE THE DESIGNATED AREA OF THE (N) ROOM LAYOUT.
   a. REFER TO DWG. 200-P-70-3.0 FOR NEW ROOM LAYOUT.
   b. PROVIDE CAP TO BRANCH LINES SUPPLYING THE DEMOLISHED SPRINKLER HEADS. CAP SHALL BE AS CLOSE AS POSSIBLE TO BRANCH LINE.

Revisions:	Date
ISSUE FOR BID	04/17/12
ISSUE FOR 100% REVIEW	02/9/12
ISSUE FOR 95% REVIEW	12/9/11
ISSUE FOR 65% REVIEW	07/7/11
ISSUE FOR 35% REVIEW	03/24/11

CONSULTANTS:

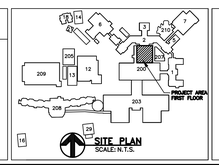

SITE PLAN
SCALE: N.T.S.

STAMP

ARCHITECT/ENGINEERS:

ADVANCE DESIGN CONSULTANTS, INC
PROFESSIONAL ENGINEERS
998 PARK AVENUE SAN JOSE, CA 95126
(408) 297-1881 FAX: (408) 294-3186
WWW.ADCENGINEERS.COM

ATTENTION:
ONLY WET SIGNED DOCUMENTS CONSTITUTE ADVANCE DESIGN CONSULTANTS, INC. PROFESSIONAL WORK AND BECAUSE OTHER REPRODUCIBLE DOCUMENTS MAY BE EASILY ALTERED WITHOUT THE CONSENT OF ADVANCE DESIGN CONSULTANTS, INC., THE WET SIGNED DOCUMENTS MUST BE REFERRED TO FOR THE ORIGINAL AND CORRECT INFORMATION. IF THERE ANY DIFFERENCES BETWEEN THE WET SIGNED DOCUMENTS AND ANY OTHER DOCUMENTS, THE WET SIGNED DOCUMENTS SHALL GOVERN.
ADVANCE DESIGN CONSULTANTS, INC. IS NOT RESPONSIBLE FOR ANY MODIFICATIONS MADE TO OUR DOCUMENTS BY ANYONE OTHER THAN AUTHORIZED REPRESENTATIVES OF ADVANCE DESIGN CONSULTANTS, INC.

Drawing Title: FIRE PROTECTION DEMOLITION PLAN

Approved Project Director:

Project Title: BUILDING 200 DENTAL CLINIC

Location: 4150 CLEMENT ST. SAN FRANCISCO, CA

Date: NOVEMBER 2011 | Checked: P. OCHOA | Drawn: J. AGUIRRE

Project Number: 662-11-108

Building Number: 200

Drawing Number: 200-PD-70-3.0

Dwg. 36 of 44

Office of Construction and Facilities Management

Department of Veterans Affairs

VA FORM 08-6231

GENERAL NOTES

A. SUBCONTRACTOR'S RESPONSIBILITY:

SUBCONTRACTOR SHALL BE RESPONSIBLE FOR PREPARING CONSTRUCTION DRAWINGS INCLUDING DATA FOR THE PROPOSED EQUIPMENT AND MATERIALS AS WEIGHT, SIZE, ROOF OPENING LOCATIONS, AND WEIGHT DISTRIBUTION. SUBCONTRACTOR SHALL VERIFY THE FIELD CONDITIONS AND MAKE ADJUSTMENT TO THE CONSTRUCTION DRAWINGS A REQUIRED. ANY CORRECTIVE MEASURE ARISING FROM A LACK OF COORDINATION WILL BE THE SOLE RESPONSIBILITY OF THE SUBCONTRACTOR. IS FURTHER CAUTIONED TO USE THE ARCHITECT/ENGINEER'S SCHEMATIC–DRAWINGS FOR GENERAL ARRANGEMENT PURPOSE ONLY. IN NO CASE SHALL THEY BE TREATED AS CONSTRUCTION DRAWINGS SUITABLE FOR FABRICATION AND INSTALLATION PURPOSES. SUBCONTRACTOR SHALL COORDINATE WORK WITH OTHER TRADES. ALL STRUCTURAL WORK TO BE COMLETED BY DESIGN ENGINEER.

B. CODE COMPLIANCE:

THE SUBCONTRACTOR SHALL COMPLY WITH ALL APPLICABLE NATIONAL, STATE AND LOCAL CODES ISSUED BY THE AUTHORITIES HAVING JURISDICTION. THE COMPLETE MECHANICAL INSTALLATION SHALL BE IN ACCORDANCE WITH THE ADOPTED EDITION OF UMC, UPC, UFC, UBC,CBC, CMC, CFC, CPC,TITLE 24, OSHA, NFPA, V.A. DESIGN MANUAL REQUIREMENTS, THE LATEST RULES AND REGULATIONS OF THE SAFETY ORDERS ISSUED BY THE DIVISION OF INDUSTRIAL SAFETY, STATE OF CALIFORNIA. THE SUB CONTRACTOR SHALL COMPLY DIVISION OF INDUSTRIAL SAFETY, STATE OF CALIFORNIA.

C. GENERAL AND SPECIAL REQUIREMENT:

SUBCONTRACTOR SHALL COMPLY WITH ALL PROVISIONS OF GENERAL REQUIREMENTS (010000) AND LATERAL FORCE ANCHORAGE PROVISIONS (130541). SUBCONTRACTOR SHALL RETAIN THE SERVICES OF A LICENSED STRUCTURAL ENGINEER (S.E.) IN THE STATE OF CALIFORNIA TO PREPARE DETAIL EQUIPMENT SUPPORT DRAWINGS AND CALCULATIONS.

D. "AS–BUILT" DRAWINGS:

THE SUBCONTRACTOR SHALL MAINTAIN AT THE JOB SITE AN UP–TO–DATE "AS–BUILT" DRAWING SET. THE "AS–BUILT" DRAWING SET SHALL REFLECT ALL APPROVED CHANGES TO THE DESIGN DRAWINGS AND FIELD CONDITION. THE "AS–BUILT" DRAWING SET SHALL BE KEPT CLEAN AND IN GOOD CONDITION AND SHALL BE TURNED OVER TO V.A. PROJECT MANAGER TWO (2) WEEKS AFTER COMPLETION OF THE PROJECT.

E. FUNCTIONAL TEST AND ACCEPTANCE:

UPON COMPLETION OF THE WORK, THE SUBCONTRACTOR SHALL SCHEDULE AND PERFORM A COMPLETE FUNCTIONAL TEST TO DEMONSTRATE TO THE V.A. FACILITIES OPERATIONS AND MAINTENANCE PERSONNEL PROJECT MANAGER THAT THE MECHANICAL SYSTEMS ARE OPERATING AS INTENDED. ANY DEFECTS OR DISCREPANCIES IN THE MATERIAL OR WORK SHALL BE CORRECTED IMMEDIATELY TO THE SATISFACTION OF V.A. PROJECT MANAGER AT NO ADDITIONAL COST. NOISY OPERATION AND/OR VIBRATION TRANSMISSION TO THE BLDG STRUCTURE WILL NOT BE ACCEPTED.

MECHANICAL REQUIREMENTS:

1. INSTALL EQUIPMENT PER MANUFACTURER'S INSTRUCTIONS.
2. ALL DIMENSIONS ARE IN INCHES, UNLESS SHOWN OTHERWISE.
3. PROVIDE AUTOMATIC AIR VENTS IN ALL PIPING AT HIGH POINTS AND PROVIDE VALVED DRAIN CONNECTIONS AT LOW POINTS. RUN VENTS AND DRAINS TO ACCESSIBLE LOCATIONS.
4. BRACE ALL PIPING AND MECHANICAL EQUIPMENT AND SUPPORT IN ACCORDANCE WITH DRAWINGS AND THE LATEST SMACNA GUIDELINES.
5. MAKE CONNECTIONS BETWEEN COPPER AND IRON OR STEEL PIPES WITH DIELECTRIC CONNECTORS.
6. SEAL AROUND ALL PIPES AND DUCTS PENETRATING FIRE RATED WALLS WITH A U.L. LISTED FIRE–STOPPING SYSTEM. SEAL SMOKE TIGHT ALL PIPE PENETRATIONS.
7. INSTALL VALVE WITH STEM POINTING UPWARD OR ABOVE HORIZONTAL PLANE, UNLESS OTHERWISE INDICATED.
8. INSTALL ALL PIPING AND VALVES, ETC., TO SUIT BEST FIELD CONDITIONS AND TO COORDINATE WITH OTHER TRADES.
9. MECHANICAL CONTRACTOR SHALL COORDINATE INSTALLATION OF VARIABLE FREQUENCY DRIVES WITH ELECTRICAL CONTRACTOR.
10. SMOKE DETECTORS SHALL BE PROVIDED BY MECHANICAL SUBCONTRACTOR AND WIRED BY ELECTRICAL OF CONTROL SUBCONTRACTOR.
11. BALANCE WATER MOVING EQUIPMENT TO CAPACITIES INDICATED IN THE SCHEDULES.
12. AS A PART OF THIS CONTRACT, MECHANICAL CONTRACTOR SHALL PROVIDE ACCURATE SHOP DRAWINGS OF THE PIPING, DUCTWORK AND CONTROL. PROVIDE AND INSTALL ALL SUPPLEMENTARY OR MISCELLANEOUS ITEMS, APPURTENANCES AND DEVICES INCIDENTAL TO OR NECESSARY FOR A SOUND, SECURE AND COMPLETE INSTALLATION.
13. CONTROL CONTRACTOR SHALL PROVIDE A CONTROL SYSTEM COMPATIBLE WITH THE EQUIPMENT MOUNTED CONTROL AND WITH THE BUILDING FMCS. THE CONTROL DIAGRAMS ARE GENERIC IN NATURE AND REPRESENT LOCAL CONTROL POINTS AND THE POINTS TO THE CENTRAL ENERGY MANAGEMENT AND CONTROL SYSTEMS.
14. INSTALL SEISMIC BRACING FOR DUCTWORK, PIPES, EQUIPMENT IN ACCORDANCE WITH LATERAL ANCHORAGE PROVISION SPEC, SECTION (130541).
15. ALL EQUIPMENT SHALL BE INSTALLED IN STRICT ACCORDANCE WITH THE EQUIPMENT MANUFACTURER'S RECOMMENDATIONS. PROVIDE ALL FITTINGS, FLEXIBLE CONNECTION, VIBRATION ISOLATOR, TRANSITIONS, VALVE AND OTHER DEVICES REQUIRED FOR A COMPLETE WORKABLE INSTALLATION.
16. THE CONTROL CONTRACTOR SHALL PROVIDE ALL WIRING AND CONDUIT FROM JUNCTION BOXES TO ALL CONTROL PANELS AND DEVICES PART OF THE CONTROL SYSTEM. ALL WIRING AND CONDUIT SHALL BE IN ACCORDANCE WITH THE DIVISION 16 SPECIFICATIONS.
17. THE CONTROL CONTRACTOR SHALL BE RESPONSIBLE FOR THE SUPPORT OF ALL CONTROL DEVICES, CONDUIT AND PANEL ASSEMBLIES AS NOTED HEREIN, AND IN THE SPECIFICATION AS REQUIRED TO PROVIDE ADEQUATE MAINTENANCE AND CLEARANCE PER CODE AND MANUFACTURE'S RECOMMENDATIONS.
18. DRAWING ARE DIAGRAMMATIC AND INDICATE GENERAL ARRANGEMENT OF SYSTEM AND EQUIPMENT. FIELD MEASUREMENTS TAKE PRECEDENCE OVER DIMENSIONED DRAWINGS.
19. PROVIDE MANUAL VOLUME DAMPER TO ALL SUPPLY, RETURN AND EXHAUST DUCTS TO DIFFUSERS, REGISTERS OR GRILLES WHERE REQUIRED FOR PROPER AIR BALANCE EVEN IF NOT SHOWN IN THE DRAWINGS.
20. ALL DUCTWORK SHALL BE CONSTRUCTED, ERECTED, AND TESTED IN ACCORDANCE WITH THE MOST RESTRICTIVE OF LOCAL REGULATIONS, PROCEDURES DETAILED IN THE ASHRAE HANDBOOK OF FUNDAMENTALS, OR THE APPLICABLE STANDARDS ADOPTED BY THE SHEET METAL AND AIR CONDITIONING CONTRACTORS NATIONAL ASSOCIATION.

SYMBOLS

- 18"ø — DUCT SIZE (CLEAR INSIDE DIMENSION) FIRST FIGURE INDICATES PLAN SIZE
- 18"øx12"ø — ROUND DUCT DIAMETER SIZE
- 18"øx12"ø, FC — FLEXIBLE CONNECTION IN DUCT
- UP DN — SUPPLY DUCT (UP & DOWN)
- UP DN — EXHAUST DUCT (UP & DOWN)
- SUPPLY TOP REGISTER OR GRILLE (WALL TYPE)
- EXHAUST OR RETURN CEILING REGISTER OR GRILLE
- EXHAUST OR RETURN BOTTOM REGISTER OR GRILLE (WALL TYPE)
- EXHAUST OR RETURN REGISTER OR TOP GRILLE (WALL TYPE)
- VANED ELBOW & AIR SPLIT TYPE DUCT TAKE–OFF
- R — INCLINED RISE, IN DIRECTION OF AIR FLOW
- D — INCLINED DROP, IN DIRECTION OF AIR FLOW
- 10x8 — NEW DUCT (WIDTH x DEPTH)
- 150 / A–10"ø — STANDARD RADIUS ELBOW
- 24x24 BIO–CLEAN HEPA FILTER

21. ALL EQUIPMENT, DUCTS, PIPING, AND OTHER DEVICES AND MATERIALS INSTALLED OUTSIDE OF THE BUILDING OR OTHERWISE EXPOSED TO THE WEATHER SHALL BE INSULATED AND COMPLETELY WEATHERPROOFED.
22. MECHANICAL CONTRACTOR SHALL PROVIDE ACCESS FOR ALL FIRE & SMOKE DAMPERS.
23. MECHANICAL EQUIPMENT, DUCTING, AND ASSOCIATED COMPONENTS, CONTAIN SETTLED METAL DUST CONTAMINATION AND SHALL ONLY BE HANDLED BY LEAD–METAL TRAINED WORKERS PER V.A. SPECIFICATIONS.
24. DAMPER'S ACTUATORS AND CONTROL VALVES WITH ACTUATORS SHALL BE PROVIDED BY CONTROL TRADE CONTRACTOR.
25. CONTROL CONTRACTOR SHALL PROVIDE SHOP DRAWINGS AND SEQUENCE OF OPERATION BEFORE COMMENCING THE JOB.
26. THE DUCT SYSTEM SHALL BE CONSTRUCTED PER CMC 602.5 TABLES NOS. 6–1, 6–2 AND 6–3 PER CMC STANDARD 6–1 OR 6–2. FLEXIBLE FACTORY–MADE AIR DUCTS SHALL BE CLASS 0 OR CLASS 1 MEET ALL REQUIREMENTS OF CMC 604.2.
27. MATERIAL EXPOSED WITHIN DUCTS OR PLENUM SHALL HAVE A FLAME–SPREAD INDEX OF NOT MORE THAN 25 AND SMOKE DEVELOPED RATING OF NO MORE THAN 50 FOR MATERIAL EXPOSED WITHIN THE DUCT/PLENUM AND/OR INSULATION MATERIALS APPLIED TO THE EXTERIOR OF DUCTS LOCATED IN THE BUILDING. CMC 602.2 AND/OR 605.0.
28. DEBRIS SHALL BE REMOVED FROM THE PREMISES ON A DAILY BASIS. DO NOT ALLOW DEBRIS TO ACCUMULATE. PROTECT ADJACENT AREAS FROM DUST AND DEBRIS.

ISOLATION RM. CONSTANT AIR FLOW REQUIRED

NO ISO	SUPPLY AIR 260 CFM	EXHAUST AIR 210 CFM
NEG ISO	260 CFM	320 CFM
POS ISO	260 CFM	210 CFM

2 POSITION EXHAUST DUCT DAMPER ACTUATOR CONTROLLED BY ISOLATION PRESSURE MONITOR CONTROL.

ABBREVIATIONS

AC	AIR CONDITIONING UNIT	DSD	DUCT SMOKE DETECTOR	MAX	MAXIMUM
AD	ACCESS DOOR	DWG	DRAWING	MIN	MINIMUM
AHU	AIR HANDLING UNIT	(E)	EXISTING	MUW	MAKE UP WATER
ARCH	ARCHITECTURAL	EF	EXHAUST FAN	(N)	NEW
BG	BLAST GATE	EXH	EXHAUST	NIC	NOT IN CONTRACT
BHP	BRAKE HORSEPOWER	FT	FEET	NTS	NOT TO SCALE
BTU	BRITISH THERMAL UNIT	HR	HOUR	PSI	POUNDS PER SQUARE INCH
CD	CEILING DIFFUSER	HWS	HOT WATER SUPPLY	SF	SUPPLY FAN
CE	CEILING EXHAUST GRILLE	HWR	HOT WATER RETURN	(R)	RELOCATED
CFM	CUBIC FEET PER MINUTE	IN	INCHES	RF	RETURN FAN
CH	CHILLER	KW	KILOWATT	RHC	REHEAT COIL
CLG	CEILING	LBS	POUNDS	RPM	REVOLUTIONS PER MINUTE
CR	CEILING RETURN REGISTER			SA	SUPPLY AIR
CHWS	CHILLED WATER SUPPLY				
CHWR	CHILLED WATER RETURN				
DN	DOWN				

VAV BOX WITH REHEAT COIL SCHEDULE

	TAG NO.	MANUFACTURER MODEL	SIZE		CFM		STATIC PRESURE		NC LEVEL		HOT WATER COIL										CONTROL TYPE		AREAS SERVED	REMARKS
			UNIT	OUTPUT	MAX	MIN	INLET	MIN. DISCH.	RAD	DISCH	CFM	MBH	EAT	LAT	APD	GPM	EWT	LWT	WPD	NO ROWS	TYPE	CV		
(N)	RHC 1B–110	GREENHECK HW58502A06–7.5x10–RH	–	–	260	260	–	–	–	–	260	11.6	55	96.2	0.11	1.2	180	160	.5	2	2 WAY	0.8	RM–1B–110	1 3 4
(N)	VAV 1B–111	TITUS DESV	10	14X13	875	370	1.0	0.25	23	19	370	12.5	55	86	0.1	1.5	180	163.5	1.5	1	2 WAY	0.8	RM–1B–111, 1B–108, 1B–112 RECEPTION, WAITING, OFFICE	1 2 3 4
(N)	VAV 1B–117	TITUS DESV	8	12x10	450	260	1.0	0.25	19	18	260	9.8	55	90	0.09	0.9	180	159.1	0.7	1	2 WAY	.46	RM–1B–117 & 1B–119 PROSTHODONTIST	1 2 3 4
(N)	VAV 1B–118	TITUS DESV	8	12x10	650	480	1.0	0.25	22	21	480	13.6	55	81	0.17	1.2	180	157.3	1.0	1	2 WAY	0.8	RM–1B–118 & 1B–120 SURGERY/IV SEDATION SURGERY RM	1 2 3 4
(N)	VAV 1B–121	TITUS DESV	8	12x10	500	370	1.0	0.25	20	18	370	12.5	55	86	0.1	1.5	180	163.3	1.5	1	2 WAY	0.8	RM–1B–121 & 1B–123 SURGERY RM	1 2 3 4
(N)	VAV B–122A	TITUS DESV	8	12x10	550	260	1.0	0.25	19	18	260	14.8	55	108	0.24	0.7	180	137.6	0.2	2	2 WAY	0.3	RM–1B–122 & 1B–122A PROSTHODONTIC/ENDODONTIC	1 2 3 4
(E)	VAV B–120A	TITUS DESV	6	(E)	160	60	–	–	–	–	60	–	–	–	–	–	–	–	–	–	–	(E)	RM–1B–122 SUPPLY STORAGE	1 2 3 4
(N)	VAV 1B–124	TITUS DESV	8	12x10	380	260	1.0	0.25	22	20	260	9.8	55	90	0.09	0.9	180	159.1	0.7	1	2 WAY	.46	RM–1B–124, IB–109, IB–105 PROSTHODONTIC/IMPLANT STORAGE/HSKP RM	1 2 3 4
(N)	VAV B–124A	TITUS DESV	8	12x10	450	250	1.0	0.25	22	20	250	9.0	55	90	0.09	0.9	180	159	0.7	1	2 WAY	0.46	RM–1B–124A BREAK/LOCKER RM CORRIDOR	1 2 3 4
(N)	VAV 1B–127	TITUS DESV	14	20x17.5	1500	450	1.0	.25	21	15	450	20.7	55	103	0.11	1.5	180	152.9	0.3	1	2 WAY	0.8	RM–1B–126, 1B–127A, & 1B–128A DENTAL OPERATORY/CORRIDOR	1 2 3 4
(N)	VAV B–129A	TITUS DESV	12	16x15	1235	450	1.0	0.25	23	18	450	17.0	55	90	0.15	1.1	180	149	13	1	2 WAY	0.8	RM–1B–128B, 1B–129A & 1B–129B DENTAL OPERATORY/CORRIDOR	1 2 3 4
(N)	VAV 1B–130	TITUS DESV	8	12X10	505	300	1.0	0.25	23	18	300	11.5	55	86	0.11	1.5	180	163.3	1.5	1	2 WAY	0.8	1B–121A, 1B–130 & 1B–129, SOILED CART HOLDING PROSTHODONTIC/X–RAY	1 2 3 4
(N)	VAV 131 A	TITUS DESV	6	12X8	250	150	1.0	0.25	20	16	150	9.0	55	120	0.18	0.7	180	151.9	0.1	1	2 WAY	.46	RM–1B–131A, 1B–128 NURSE OFFICE/CLEAN LAB	1 2 3 4
(N)	VAV 1B–135	TITUS DESV	10	14X12.5	1000	600	1.0	.25	19	18	600	31.2	55	89	0.25	0.9	180	110	0.2	2	2 WAY	0.8	RM–1B–135, DENTAL LAB.	1 2 3 4

SHEET NOTES:

1. REHEAT COILS SHALL BE COPPER TUBES AND ALUMINUM FINS, STAINLESS STEEL CASING.
2. VAV BOX WITH DIGITAL ELECTRONIC CONTROLLER WITH VELOCITY SENSOR, PRESSURE INDEPENDENT.
3. CONTROL VALVES SHALL BE BELIMO B2–SERIES.
4. ELECTRONIC THERMOSTAT.
5. FURNISH AND INSTALL BACKDRAFT DAMPER AT EXHAUST FAN DISCHARGE.
6. MECHANICAL CONTRACTOR SHALL FURNISH AND INSTALL VFD AND WIRED BY ELECTRICAL CONTRACTOR. EXHAUST FAN WITH VFD MOTORS BEING SERVED BY VFD SHALL BE INVERTED DUTY RATED MOTOR PER NEMA MGI, PART 31.
7. THE NEW EXHAUST FAN 200–EF–1C RUN 24/7 MONITOR AND CONTROLLED BY VA FACILITIES OPERATIONS AT THE (OWS) OPERATING WORK STATION.
8. MECHANICAL CONTRACTOR SHALL FURNISH AND INSTALL DUCT SMOKE DETECTOR, HARD WIRED BY ELECTRICAL CONTRACTOR AND WIRED BY FIRE CONTRACTOR TO THE BLDG MAIN FIRE ALARM CONTROL PANEL.
9. FURNISH AND INSTALL VIBRATION SPRING ISOLATORS.
10. PREMIUM EFFICIENCY MOTOR.
11. THE NEW FUME HOOD EXHAUST FAN 200–FE–1 RUN 24/7 LOCAL AND REMOTE ALARM BY VA FACILITIES OPERATION AT THE (OWS) OPERATING WORK STATION.
12. NEW FUME HOOD EXHAUST FAN 200–FE–1 SHALL BE CONNECTED TO EMERGENCY POWER.
13. FURNISH AND INSTALL STAINLESS STEEL BACKDRAFT DAMPER AT EXHAUST DISCHARGE.
14. PROVIDE SPARK PROOF CONSTRUCTION FAN AND EXPLOSION PROOF MOTOR.
15. EXHAUST FAN SHALL BE PRIME COATING WITH ACID RESISTANT AND POLYURETHANE.
16. ELECTRICAL CONTRACTOR SHALL FURNISH AND INSTALL NEMA3R DISCONNECT SWITCH.

EXHAUST FAN SCHEDULE

	TAG NO.	DESCRIPTION MODEL No.	CFM	S.P. IN W.G.	FAN RPM	BHP	HP	MOTOR V	MOTOR PH	MOTOR H2	WEIGHT LBS	LOCATION	AREAS SERVED	REMARKS
(N)	200–EF 1C	GREENHECK 20–AFSW–41	3200	1.5	1174	1.07	1 1/2	460	3	60	347	PENTHOUSE ROOF	1ST FLOOR DENTAL CLINIC	UPBLAST, CW ROTATION, COATED W/PERMATECTOR & BAKED POLYESTER URETHANE 5 6 7 8 9 10
(N)	200–EF 1	GREENHECK 9–BISW–41	550	1.5	2159	.29	1/3	115	1	60	130	PENTHOUSE ROOF	FUME HOOD DENTAL LAB 1ST FLOOR	UPBLAST, CW ROTATION 9 10 11 12 13 14 15 16

SUPPLY DIFUSSER/RETURN & EXHAUST GRILLE SCHEDULE (HEPA FILTER)

MARK	MANUFACTURER	MODEL	NECK SIZE (INCH)	MODULE SIZE (INCH)	MAX N.C.	PATTERN	BORDER	REMARKS
A	TITUS	PSS	SEE PLAN	24x24	30	4–WAY	T–BAR TYPE–3	PERFORATED FACE, STAR PATTERN DEFLECTOR
B	TITUS	PAR	SEE PLAN	24x24	30	–	T–BAR TYPE–3	PERFORATED FACE
C	ENVIRCO	HEPA FILTER	10"ø	24x24	–	–	T–BAR TYPE–3	BIO–CLEAN AIR SUPPLY HEPA FILTER, EFFICIENCY 99.97% @ .3 MICRONS

Revisions:	Date
ISSUE FOR BID	04/17/12
ISSUE FOR 100% REVIEW	02/9/12
ISSUE FOR 95% REVIEW	12/9/11
ISSUE FOR 65% REVIEW	07/7/11
ISSUE FOR 35% REVIEW	03/24/11

CONSULTANTS:

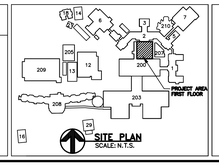

SITE PLAN
SCALE:N.T.S.

REGISTERED PROFESSIONAL ENGINEER
LORENZO A. RIOS CASTILLON
NO. M 21000
EXP. 06/30/2013
MECHANICAL
STATE OF CALIFORNIA

STAMP

ARCHITECT/ENGINEERS:

ADVANCE DESIGN CONSULTANTS, INC
PROFESSIONAL ENGINEERS
998 PARK AVENUE SAN JOSE, CA 95126
(408) 297–1881 FAX: (408) 294–3186
WWW.ADCENGINEERS.COM

ATTENTION:

ONLY WET SIGNED DOCUMENTS CONSTITUTE ADVANCE DESIGN CONSULTANTS, INC. PROFESSIONAL WORK, AND BECAUSE OTHER REPRODUCIBLE DOCUMENTS MAY BE EASILY ALTERED WITHOUT THE CONSENT OF ADVANCE DESIGN CONSULTANTS, INC., THE WET SIGNED DOCUMENTS MUST BE REFERRED TO FOR THE ORIGINAL AND CORRECT INFORMATION. IF THERE ANY DIFFERENCES BETWEEN THE WET SIGNED DOCUMENTS AND ANY OTHER DOCUMENTS, THE WET SIGNED DOCUMENTS SHALL GOVERN.

ADVANCE DESIGN CONSULTANTS, INC. IS NOT RESPONSIBLE FOR ANY MODIFICATIONS MADE TO OUR DOCUMENTS BY ANYONE OTHER THAN AUTHORIZED REPRESENTATIVES OF ADVANCE DESIGN CONSULTANTS, INC.

Drawing Title: MECHANICAL GENERAL NOTES ABREVIATIONS, SIMBOLS AND EQUIPMENT SCHEDULE

Approved Project Director:

Project Title: BUILDING 200 DENTAL CLINIC

Location: 4150 CLEMENT ST. SAN FRANCISCO, CA

Date: NOVEMBER 2011 | Checked: L. RIOS | Drawn: R. RIOS

Project Number: 662-11-108

Building Number: 200

Drawing Number: 200-H-80-0.0

Dwg. 37 of 44

Office of Construction and Facilities Management

Department of Veterans Affairs

VA FORM 08–6231

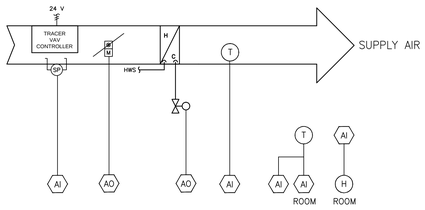

VAV BOX CONTROL DIAGRAM (TYPICAL)
SCALE: N.T.S.

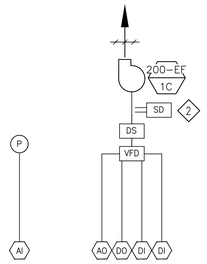

EXHAUST FAN CONTROL DIAGRAM FOR EF 200-EF-1C
SCALE: N.T.S.

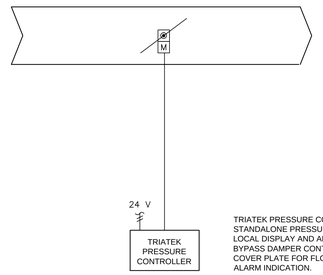

TRIATEK PRESSURE CONTROLLER FMS-1630 STANDALONE PRESSURE CONTROLLER WITH LOCAL DISPLAY AND ANALOG OUTPUT FOR BYPASS DAMPER CONTROL. STAINLESS STEEL COVER PLATE FOR FLOW TUBE AND LOCAL ALARM INDICATION.

PRESSURE CONTROL DIAGRAM (STANDALONE)
SCALE: N.T.S.

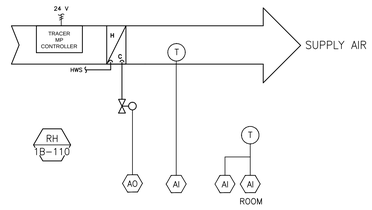

REHEAT ZONE CONTROL DIAGRAM FOR RH 1B-110
SCALE: N.T.S.

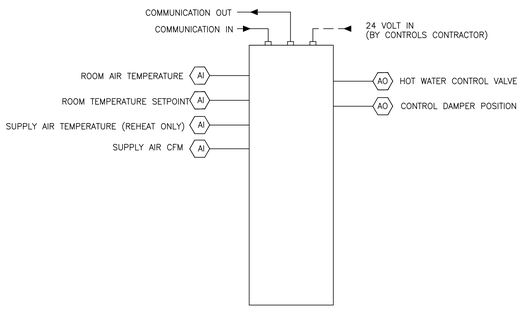

CONTROL PANEL WITH DDC CONTROLLER AND FMCS POINT LIST VAV BOX
SCALE: N.T.S.

(VAV-1B-111, 1B-117, 1B-118, 1B-121, 1B-122A, 1B-124, 1B-124A, 1B-127, 1B-129A, 1B-130, 1B-131A, 1B-135)

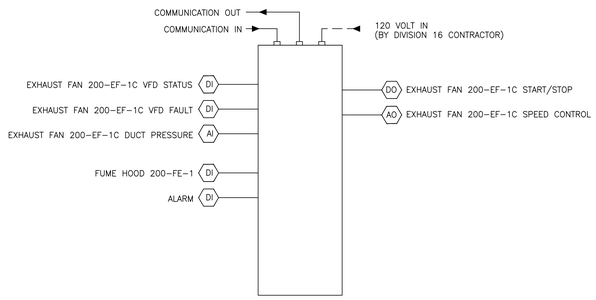

CONTROL PANEL WITH DDC CONTROLLER AND FMCS POINT LIST FOR EF 200-EF-1C
SCALE: N.T.S.

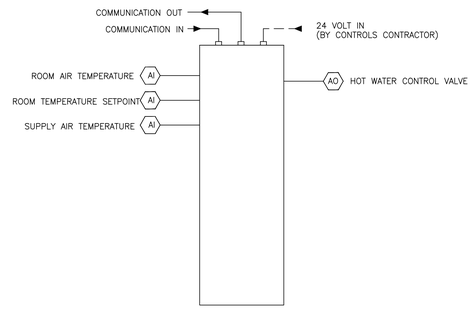

CONTROL PANEL WITH DDC CONTROLLER AND FMCS POINT LIST REHEAT ZONE
SCALE: N.T.S.

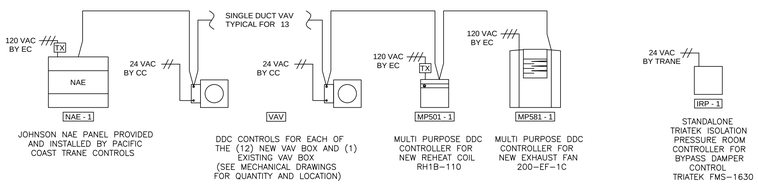

CONTROL SYSTEM ARCHITECTURE DIAGRAM
SCALE: N.T.S.

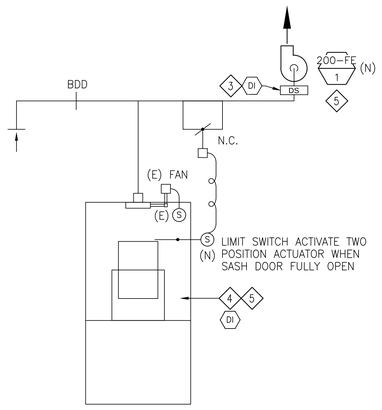

RELOCATED FUME HOOD
SCALE: N.T.S.

GENERAL NOTES

1. CONTRACTOR SHALL FURNISH AND INSTALL THE CONTROLS DEVICES AND CONFIGURATIONS INDICATED.
2. ELECTRICAL CONTRACTOR TO THE HARDWIRE SMOKE DETECTORS TO THE VFDS. FIRE CONTRACTOR TO WIRE TO THE BLDG MAIN FIRE ALARM CONTROL PANEL.
3. CURRENT TRANSDUCER (AUXILIARY CONTACT)
4. FUME HOOD EXHAUST FAN 200-FE-1 TO RUN 24/7, PROVIDE (AUDIBLE & VISUAL) LOCAL AND REMOTE ALARM W/ INTERNAL TIMER, MONITOR AND CONTROLLED BY VA FACILITIES OPERATION AT (OWS) OPERATING WORK STATION.
5. 200-FE-1 AND FUME HOOD EXHAUST FAN CONNECT TO EMERGENCY POWER.
6. 120 VOLT POWER SHALL BE PROVIDED BY ELECTRICAL CONTRACTOR (EC) UNDER DIVISION 16.
7. 24 VOLT WIRING BY CONTROLS CONTRACTOR (CC)

Revisions:	Date
ISSUE FOR BID	04/17/12
ISSUE FOR 100% REVIEW	02/9/12
ISSUE FOR 95% REVIEW	12/9/11
ISSUE FOR 65% REVIEW	07/7/11
ISSUE FOR 35% REVIEW	03/24/11

CONSULTANTS:

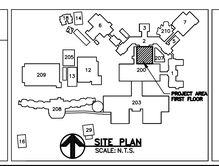

REGISTERED PROFESSIONAL ENGINEER
LORENZO A. RIOS CASTELLON
NO. M 21000
EXP. 06/30/2013
MECHANICAL
STATE OF CALIFORNIA
STAMP

ARCHITECT/ENGINEERS:

ADVANCE DESIGN CONSULTANTS, INC
PROFESSIONAL ENGINEERS
998 PARK AVENUE SAN JOSE, CA 95126
(408) 297-1881 FAX: (408) 294-3186
WWW.ADCENGINEERS.COM

ATTENTION:
ONLY WET SIGNED DOCUMENTS CONSTITUTE ADVANCE DESIGN CONSULTANTS, INC. PROFESSIONAL WORK AND BECAUSE OTHER REPRODUCIBLE DOCUMENTS MAY BE EASILY ALTERED WITHOUT THE CONSENT OF ADVANCE DESIGN CONSULTANTS, INC., THE WET SIGNED DOCUMENTS MUST BE REFERRED TO FOR THE ORIGINAL AND CORRECT INFORMATION. IF THERE ANY DIFFERENCES BETWEEN THE WET SIGNED DOCUMENTS AND ANY OTHER DOCUMENTS, THE WET SIGNED DOCUMENTS SHALL GOVERN.
ADVANCE DESIGN CONSULTANTS, INC. IS NOT RESPONSIBLE FOR ANY MODIFICATIONS MADE TO OUR DOCUMENTS BY ANYONE OTHER THAN AUTHORIZED REPRESENTATIVES OF ADVANCE DESIGN CONSULTANTS, INC.

Drawing Title: MECHANICAL CONTROL DIAGRAM

Approved Project Director:

Project Title: BUILDING 200 DENTAL CLINIC

Location: 4150 CLEMENT ST. SAN FRANCISCO, CA

Date: NOVEMBER 2011 | Checked: L. RIOS | Drawn: R. RIOS

Project Number: 662-11-108

Building Number: 200

Drawing Number: 200-H-80-0.01

Dwg. 38 of 44

Office of Construction and Facilities Management

Department of Veterans Affairs

VA FORM 08-6231

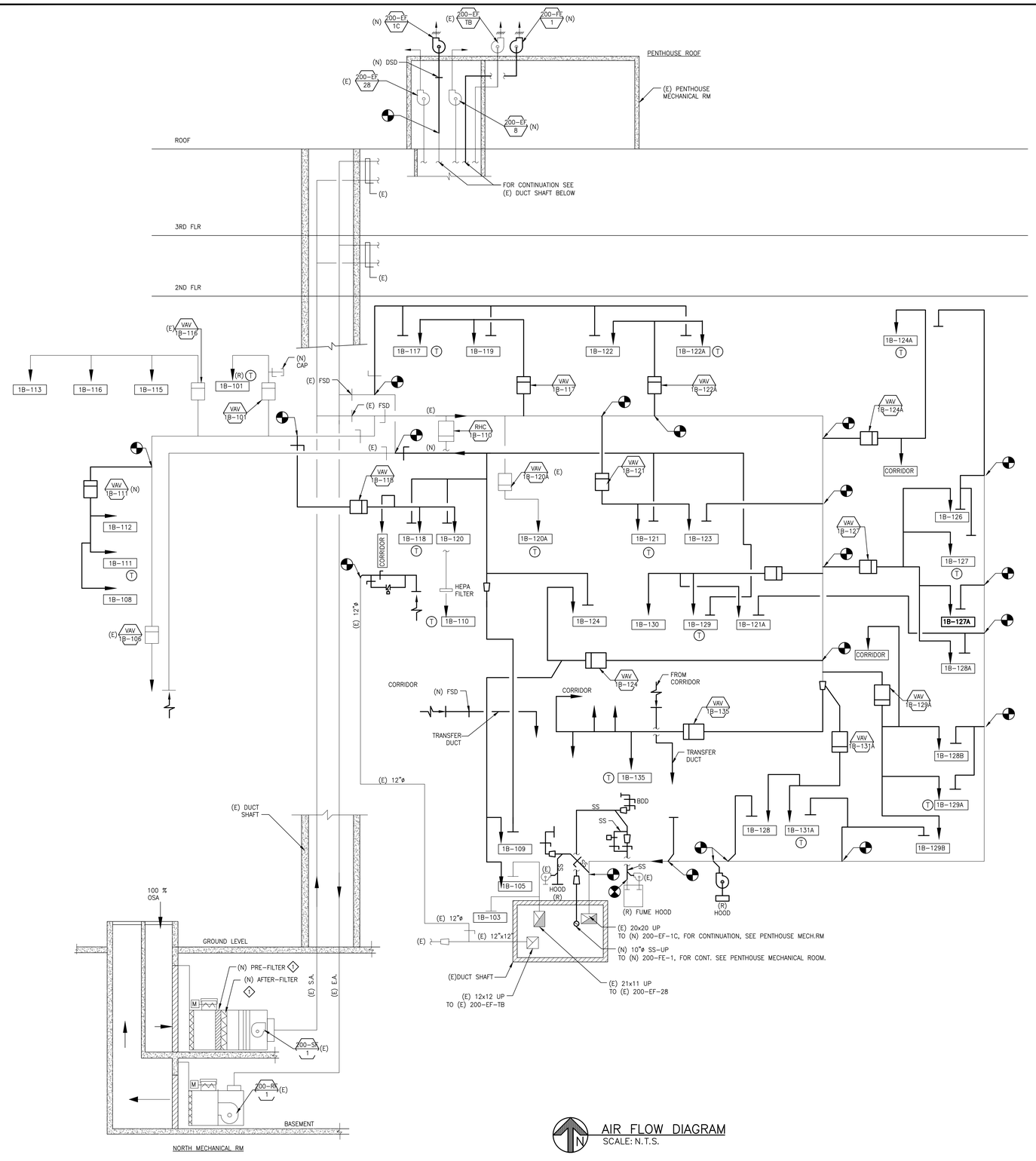

AIR FLOW DIAGRAM
SCALE: N.T.S.

SHEET NOTES:

1. CHECK AND REPLACE EXISTING AIR FILTERS AS REQUIRED: PRE-FILTER SHALL BE 30% MERV 8, 2" THICK, AFTER-FILTER 95% MERV 14 BAG FILTER

Revisions:	Date
ISSUE FOR BID	04/17/12
ISSUE FOR 100% REVIEW	02/9/12
ISSUE FOR 95% REVIEW	12/9/11
ISSUE FOR 65% REVIEW	07/7/11
ISSUE FOR 35% REVIEW	03/24/11

CONSULTANTS:

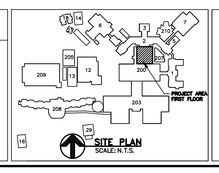

SITE PLAN
SCALE: N.T.S.

REGISTERED PROFESSIONAL ENGINEER LORENZO A. RIOS OSTELLON NO. M 21000 EXP. 06/30/2013 MECHANICAL STATE OF CALIFORNIA

STAMP

ARCHITECT/ENGINEERS:

ADVANCE DESIGN CONSULTANTS, INC
PROFESSIONAL ENGINEERS
998 PARK AVENUE SAN JOSE, CA 95126
(408) 297-1881 FAX: (408) 294-3186
WWW.ADCENGINEERS.COM

ATTENTION:

ONLY WET SIGNED DOCUMENTS CONSTITUTE ADVANCE DESIGN CONSULTANTS, INC. PROFESSIONAL WORK AND BECAUSE OTHER REPRODUCIBLE DOCUMENTS MAY BE EASILY ALTERED WITHOUT THE CONSENT OF ADVANCE DESIGN CONSULTANTS, INC., THE WET SIGNED DOCUMENTS MUST BE REFERRED TO FOR THE ORIGINAL AND CORRECT INFORMATION. IF THERE ANY DIFFERENCES BETWEEN THE WET SIGNED DOCUMENTS AND ANY OTHER DOCUMENTS, THE WET SIGNED DOCUMENTS SHALL GOVERN.

ADVANCE DESIGN CONSULTANTS, INC. IS NOT RESPONSIBLE FOR ANY MODIFICATIONS MADE TO OUR DOCUMENTS BY ANYONE OTHER THAN AUTHORIZED REPRESENTATIVES OF ADVANCE DESIGN CONSULTANTS, INC.

Drawing Title: AIR FLOW DIAGRAM

Approved Project Director:

Project Title: BUILDING 200 DENTAL CLINIC

Location: 4150 CLEMENT ST. SAN FRANCISCO, CA

Date: NOVEMBER 2011 | Checked: L. RIOS | Drawn: J. AGUIRRE

Project Number: 662-11-108

Building Number: 200

Drawing Number: 200-H-80-0.1

Dwg. 39 of 44

Office of Construction and Facilities Management

Department of Veterans Affairs

VA FORM 08-6231

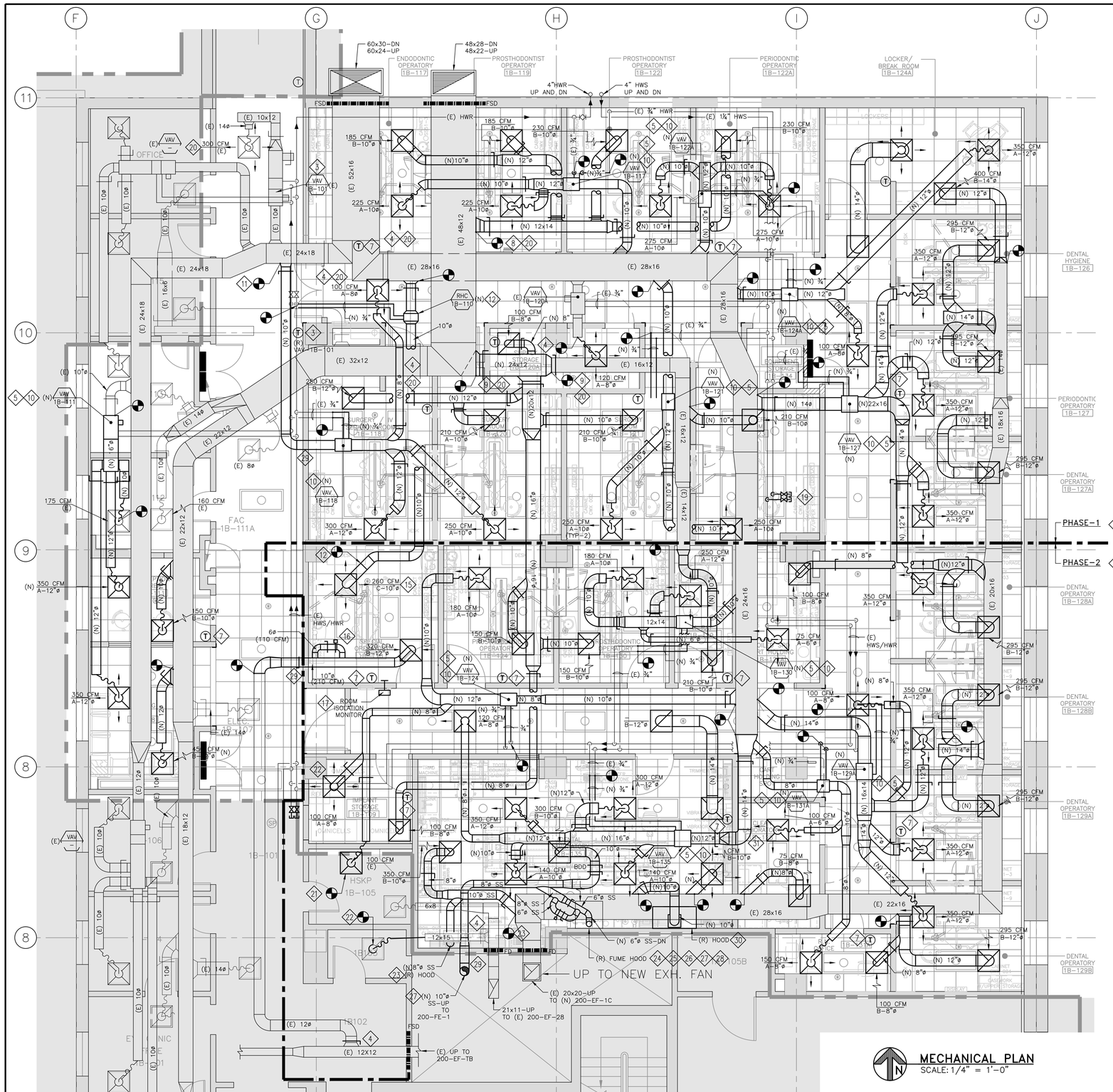

MECHANICAL PLAN
SCALE: 1/4" = 1'-0"

SHEET NOTES:

1. MECHANICAL CONTRACTOR SHALL COORDINATE WITH THE V.A. PROJECT MANAGER IN ADVANCE, SHALL PREPARE AND SUBMIT A DETAILED SEQUENCE OF INSTALLATION FOR NEW WORK TO AVOID ANY DISTURBANCE TO THE HOSPITAL DAILY ACTIVITIES. NO WORK SHALL BEGIN PRIOR TO APPROVAL OF THIS PROPOSED SEQUENCE OF CONSTRUCTION. PROPOSED SEQUENCE OF WORK SHALL BE ORIENTED AROUND ADJACENT ACTIVE PHASE-1&2 DENTAL CLINIC; OFFICES AND EXISTING CORRIDOR ASSURING THAT NO HEAVY STEEL LIFTING SUCH AS DENTAL EQUIPMENT, EXCESSIVE NOISE, CONCRETE CORE DRILLING ARE TRANSMITTED TO THE HOSPITAL BUILDING DURING THE V.A. OFFICE HOURS. PROTECT THE PUBLIC WITH BARRICADE GUARD LIGHTS, POSTING SIGNS DURING THE ENTIRE PROGRESS OF WORK.
2. MECHANICAL CONTRACTOR IS RESPONSIBLE FOR ALL COORDINATION WITH ALL OTHER TRADES THE SEQUENCE OF HVAC VAV BOX AND ACCESSORIES, DUCTWORK INSTALLATION WITH THE (E) CEILING MEMBERS, LIGHTS FIXTURES, ELECTRICAL CONDUITS, PLUMBING PIPING, ETC... AND THE ITEMS THAT WILL REMAIN IN PLACE.
3. REINSTALL RELOCATED THERMOSTAT AND RETAG (E) VAV-1B-117 TO VAV-1B-101. PROVIDE ALL PNEUMATIC TUBING AS REQUIRED FOR INSTALLATION.
4. EXISTING VOLUME DAMPERS COULD NOT BE FIELD VERIFY CONTRACTOR SHALL INCLUDE INSTALLATION OF (N) DAMPERS IN BID. IF EXISTING DAMPERS IN GOOD OPERATING CONDITIONS ARE FOUND, CONTRACTOR SHALL VERIFY COTR.
5. FURNISH AND INSTALL NEW VAV BOX WITH ELECTRONIC CONTROLLER, REHEAT COIL, HOT WATER, PIPING, ASSOCIATED ACCESSORIES AND DUCK WORK. DRAWING ARE DIAGRAMMATIC AND INTENDED TO CONVEY SCOPE AND GENERAL ARRANGEMENT OF NEW EQUIPMENT INSTALLATION. CONTRACTOR SHALL FIELD COORDINATE ALL EQUIPMENT, TERMINAL UNITS, DUCK WORK AND SUPPORT INSTALLATION WHERE REQUIRED DUE TO ACTUAL FIELD CONDITION.
6. MECHANICAL CONTRACTOR IS RESPONSIBLE FOR ALL COORDINATION WITH ALL OTHER TRADES THE EXACT LOCATION OF ALL NEW CEILING SUPPLY DIFFUSERS AND EXHAUST GRILLES.
7. INSTALL NEW ROOM THERMOSTAT 4'X6" ABOVE FINISH FLOOR. COORDINATE EXACT LOCATION IN THE FIELD.
8. FURNISH AND INSTALL NEW 14X12 EXHAUST DUCK WITH VOLUME DAMPERS, AND CONNECT TO THE (E) 48X12.
9. FURNISH AND INSTALL NEW 24X14 EXHAUST DUCT WITH VOLUME DAMPER, AND CONNECT TO THE (E) 48X22 AND (E) 16X12.
10. FURNISH AND INSTALL NEW ¾"ø HWS/R PIPING CONNECT TO THE EXISTING, ROUTE AND CONNECT TO THE NEW VAV BOX COMPLETE WITH PIPING ACCESSORIES AND INSTALL ACCESSIBLE FOR REPAIR AND MAINTENANCE.
11. FURNISH AND INSTALL NEW 10"ø SUPPLY DUCT, CONNECT TO THE (E) 24x18 SUPPLY MAIN, ROUTE AND CONNECT TO THE (N) VAV-1B-118.
12. FURNISH AND INSTALL NEW 10"ø SUPPLY DUCT, CONNECT TO THE EXISTING 28x16 WITH VOLUME DAMPER. PROVIDE NEW DUCT REHEAT COIL RHC-1B-110 WITH COMPLETE PIPING AND ACCESSORIES. INSTALL REHEAT COIL ACCESSIBLE FOR REPAIR AND MAINTENANCE. ROUTE AND TERMINATE NEW SUPPLY DUCT TO RM-1B-110 FOR PHASE-2 CONNECTION.
13. FURNISH AND INSTALL NEW VAV-1B-124 COMPLETE WITH PIPING AND ACCESSORIES ACCESSIBLE FOR REPAIR AND MAINTENANCE. MAKE ADJUSTMENT AS REQUIRED DUE TO ACTUAL FIELD CONDITION.
14. MECHANICAL CONTRACTOR IS RESPONSIBLE FOR ALL COORDINATION WITH ALL OTHER TRADES AND DENTAL CLINIC USERS DURING THE PHASE-1 AND PHASE-2 TRANSITION DOES NOT AFFECT THEIR DAILY ACTIVITIES.
15. FURNISH AND INSTALL NEW 24x24 DUCTED HEPA FILTER SUPPLY AIR TO RM-1B-110. COORDINATE EXACT FILTER LOCATION DUE TO THE EXISTING FIELD CONDITION. CONNECT SUPPLY DUCT INSTALLED IN PHASE-1.
16. FURNISH AND INSTALL NEW EXHAUST GRILLE, EXTEND AND CONNECT NEW RIGID DUCT TO THE EXISTING 12"ø EXHAUST DUCT FROM EXHAUST FAN 200-EF-TB. PROVIDE TWO POSITION ELECTRIC VOLUME DAMPER ACTUATOR. DURING THE CHANGED OF RM-1B-110 OCCUPANCY, EXHAUST DAMPER ACTUATOR POSITION WILL BE SET THROUGH THE ROOM PRESSURIZATION CONTROLLER.
17. FURNISH AND INSTALL TRIATEK OR EQUAL MODEL FMS-1630 SERIES SINGLE ISOLATION ROOM PRESSURIZATION MONITOR. TOUCHPAD PROGRAMMABLE, PASSWORD PROTECTION, LCD DIGITAL DISPLAY AND LED ROOM STATUS INDICATOR, THREE CONDITIONS: "NO ISO", "POS ISO" OR "NEG ISO", DISPLAY ACTUAL ROOM PRESSURE. ALARM STATUS CAN BE ANNUNCIATED LOCALLY WITH BOTH AUDIBLE , VISUAL AND TRANSMIT REMOTELY TO THE ECC. INSTALL ISOLATION MONITOR IN STRICT MANUFACTURING INSTALLATION AND RECOMMENDATION MANUAL.
18. USE OF FLEX DUCT SHALL BE RESTRICTED MAXIMUM LENGTH SHALL NOT EXCEED 5 FT.
19. CAP END OF PARTIALLY DEMOLISH HWS/R.
20. CONTROL CONTRACTOR IS RESPONSIBLE TO PROVIDE CONTROL TO THE DENTAL AREAS SERVED BY THE NEW EXHAUST FAN 200-EF-1C TO MAINTAIN REQUIRED ROOM PRESSURIZATION.
21. FURNISH AND INSTALL 8"ø SUPPLY DUCT, ROUTE AND CONNECT TO THE (E) SUPPLY DIFFUSER IN THE HSKP ROOM 1B-105.
22. FURNISH AND INSTALL NEW 10"ø EXHAUST DUCT AND CONNECT TO THE EXISTING.
23. FURNISH AND INSTALL NEW 10"ø SS EXHAUST DUCT WITH VOLUME AND CONNECT TO THE EXISTING 28x16. CONNECT 10"ø TO THE NEW CEILING EXHAUST GRILLE AND 8"ø SS TO THE RELOCATED EXHAUST HOOD. AIR BALANCE HOOD EXHAUST TO 550 CFM WHEN HOOD EXHAUST FAN IS ON AND 250 WHEN EXHAUST FAN IS OFF.
24. <u>RELOCATED FUME HOOD WITH BASE CABINET:</u> FURNISH AND INSTALL NEW 6"ø SS EXHAUST DUCT WITH VOLUME DAMPER 6"ø SS BYPASS WITH TWO POSITION DAMPER ELECTRICALLY INTERLOCK WITH FUME HOOD SASH DOOR. LIMIT SWITCH TO ACTIVATE DAMPER OPEN WHEN SASH DOOR ARE FULLY OPEN
<u>AIR BALANCE FUME HOOD:</u>
SASH DOOR AT MIN UNOCCUPIED: 120 CFM (FAN OFF),
SASH DOOR AT USE WORKING HEIGHT 8": 250 CFM (FAN ON),
SASH DOOR FULLY OPEN: 450 CFM (FAN ON, BYPASS DAMPER OPEN)
25. <u>BEFORE THE HOOD IS PUT TO OPERATION:</u>
   a. ADEQUATE SUPPLY OF MAKE UP AIR .
   b. FACE VELOCITY 100'/MIN AT NORMAL SASH WORKING HEIGHT 8".
26. FUME HOOD TESTING BEFORE COMMISSIONING: WHEN REQUIRED BY THE DEPT OF ENVIRONMENTAL HEALTH AND SAFETY, HOOD SHALL BE SUBJECT TO HAVING TRACER GAS TO CAPTURE TEST PERFORMED ON HOOD TYPE. ALL HOOD TESTING MUST BE ACCORDANCE WITH METHODS OUTLINED IN ASHRAE STANDARD 110-1999.
27. FURNISH AND INSTALL STAINLESS STEEL FUME HOOD EXHAUST DUCT TYPE 316, 26 GAUGE, ALL DUCT SEAMS AND JOINT SHALL BE SEALED. DUCT WORK SHALL BE WELDED. HORIZONTAL RUNS SHALL BE AS SHORT AS POSSIBLE.
28. FUME HOOD BE LABELED TO SHOWN WHICH VENTILATION SYSTEM OR MAKE UP AIR SUPPLY FAN: (E) 200-SF-1.
29. SEAL AIR TIGHT EXHAUST OR SUPPLY DUCT PENETRATION THROUGH THE RATED WALL OR SHAFT WITH 3M UL LISTED FIRE STOP SYSTEM RATING TO MATCH SHAFT WALL RATING.
30. INSTALL RELOCATED HOOD AND ASSOCIATED EXHAUST FAN FROM CLEAN ROOM 1B-130A. COORDINATE WITH ALL OTHER TRADES EXACT LOCATION AND HEIGHT. ELECTRICAL CONTRACTOR TO PROVIDE POWER SUPPLY AND DISCONNECT AS REQUIRED.
31. SET VOLUME DAMPERS NORMALLY CLOSED. BALANCING CONTRACTOR TO ADJUST DAMPER AS REQUIRED TO MAINTAIN ROOM NEGATIVE PRESSURE AS REQUIRED.

ISSUE FOR BID	04/17/12
ISSUE FOR 100% REVIEW	02/9/12
ISSUE FOR 95% REVIEW	12/9/11
ISSUE FOR 65% REVIEW	07/7/11
ISSUE FOR 35% REVIEW	03/24/11
Revisions:	Date

VA FORM 08-6231

CONSULTANTS:

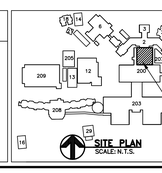

SITE PLAN
SCALE: N.T.S.

STAMP

ARCHITECT/ENGINEERS:

ADVANCE DESIGN CONSULTANTS, INC
PROFESSIONAL ENGINEERS
998 PARK AVENUE SAN JOSE, CA 95126
(408) 297-1881 FAX: (408) 294-3186
WWW.ADCENGINEERS.COM

ATTENTION:
ONLY WET SIGNED DOCUMENTS CONSTITUTE ADVANCE DESIGN CONSULTANTS, INC. PROFESSIONAL WORK AND BECAUSE OTHER REPRODUCIBLE DOCUMENTS MAY BE EASILY ALTERED WITHOUT THE CONSENT OF ADVANCE DESIGN CONSULTANTS, INC., THE WET SIGNED DOCUMENTS MUST BE REFERRED TO RELIABLY AS THE CORRECT INFORMATION. IF THERE ANY DIFFERENCES BETWEEN THE WET SIGNED DOCUMENTS AND ANY OTHER DOCUMENTS, THE WET SIGNED DOCUMENTS SHALL GOVERN.
ADVANCE DESIGN CONSULTANTS, INC. IS NOT RESPONSIBLE FOR ANY MODIFICATIONS MADE TO OUR DOCUMENTS BY ANYONE OTHER THAN AUTHORIZED REPRESENTATIVES OF ADVANCE DESIGN CONSULTANTS, INC.

Drawing Title: MECHANICAL NEW WORK FIRST FLOOR HVAC PARTIAL PLAN

Approved Project Director:

Project Title: BUILDING 200 DENTAL CLINIC

Location: 4150 CLEMENT ST. SAN FRANCISCO, CA

Date: NOVEMBER 2011 | Checked: L. RIOS | Drawn: J. AGUIRRE

Project Number: 662-11-108

Building Number: 200

Drawing Number: 200-H-80-1.0

Dwg. 40 of 44

Office of Construction and Facilities Management

Department of Veterans Affairs

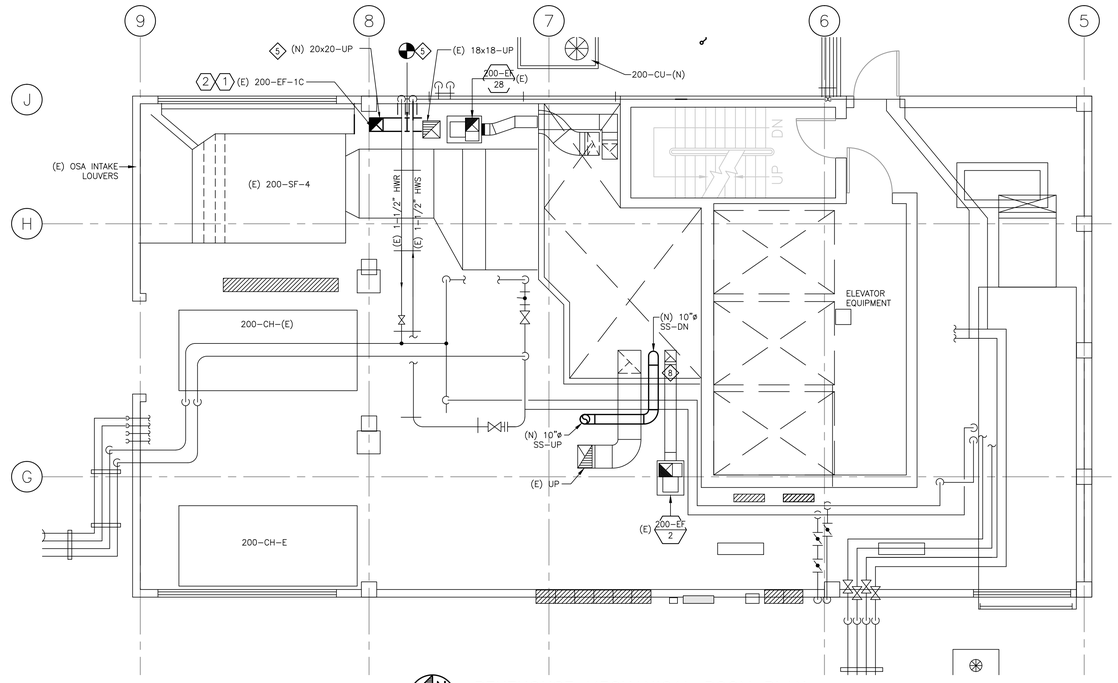

PENTHOUSE MECHANICAL ROOM PLAN
SCALE: 3/16" = 1'-0"

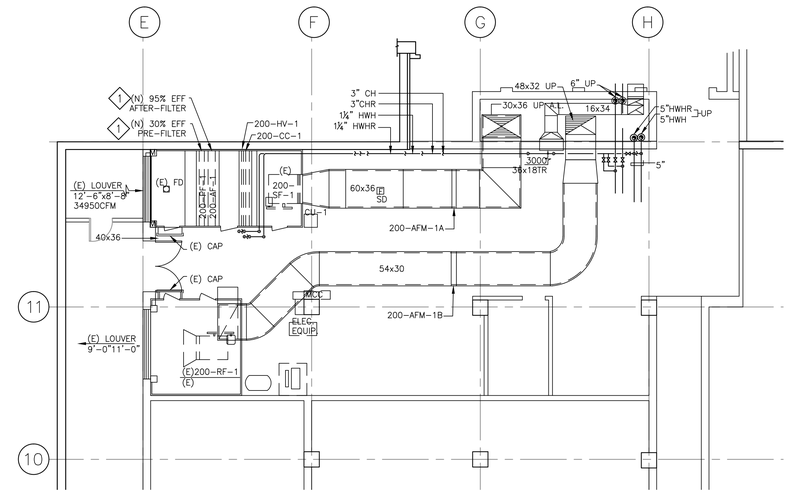

NORTH BASEMENT MECHANICAL ROOM
SCALE: 1/8" = 1'-0"

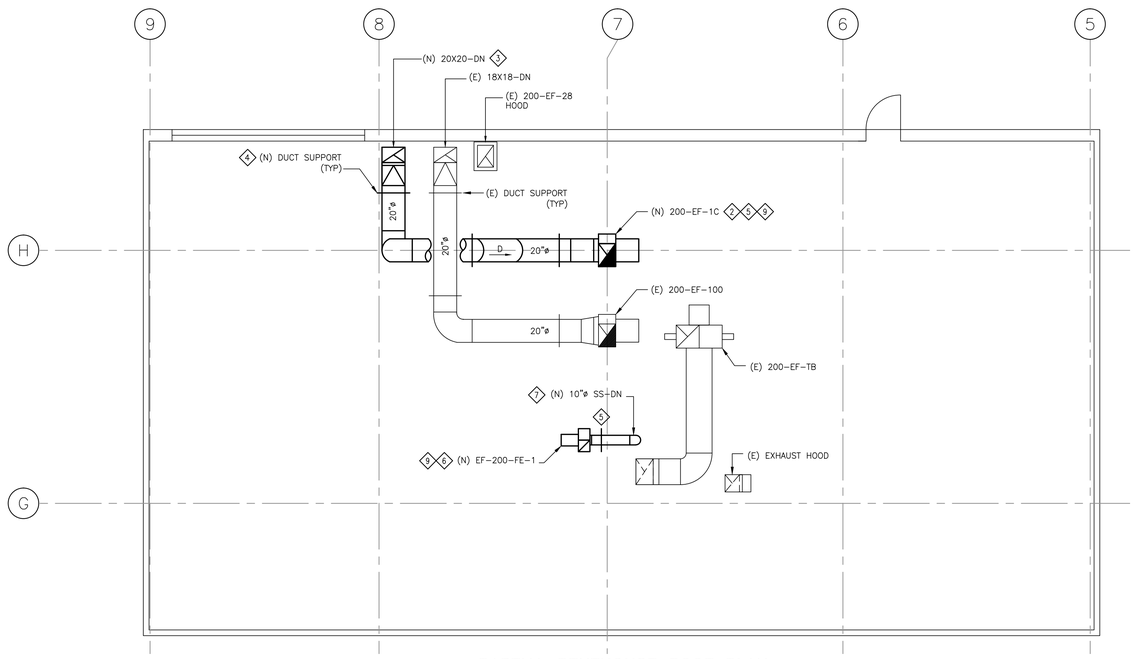

PARTIAL PENTHOUSE ROOF PLAN
SCALE: 3/16" = 1'-0"

SHEET NOTES:

1. EXISTING SUPPLY FAN 200-SF-1: REPLACE EXISTING PRE-FILTER SHALL BE 30% EFFICIENCY MERV 8, 2" THICK, AFTER-FILTER 95% EFFICIENCY MERV 15 BAG FILTER.
2. FURNISH AND INSTALL NEW EXHAUST FAN 200-EF-1C WITH VIBRATION SPRING ISOLATOR AND FOUR CORNERS IN LEVEL POSITION. EXHAUST FAN DISCHARGE WITH BACKDRAFT DAMPER. AND SHALL BE 10 FT MIN. DISTANCE FROM ANY AIR INTAKE OPENING AND ABOVE ROOF LEVEL.
3. FURNISH AND INSTALL NEW 20x20 EXHAUST DUCT ROUTE THROUGH ROOF CURB AND COMPLETE WITH FLASHING.
4. FURNISH AND INSTALL NEW DUCT SUPPORT.
5. FURNISH AND INSTALL NEW 20x20 EXHAUST DUCT AND CONNECT TO THE EXISTING END OF PARTIALLY DEMOLISH DUCT BETWEEN COLUMN J/7-8. ROUTE NEW 20"ø TO THE PENTHOUSE ROOF AND CONNECT TO THE NEW EXHAUST FAN 200-EF-1C
6. FURNISH AND INSTALL NEW FUME HOOD EXHAUST FAN 200-FE-1 WITH VIBRATION SPRING ISOLATOR AND FOUR CORNERS IN LEVEL POSITION. EXHAUST FAN DISCHARGE WITH BACKDRAFT DAMPER, DISCHARGE DUCT WITH 8"ø CONE EXIT AND SHALL BE 10 FT MIN DISTANCE FROM ANY AIR INTAKE OPENING AND ABOVE ROOF LEVEL.
7. CORE DRILL PENTHOUSE ROOF FOR NEW 10"ø FUME HOOD EXHAUST DUCT INSTALLATION AND PROVIDE ROOF CURB COMPLETE WITH FLASHING.
8. SEAL AIR TIGHT NEW EXHAUST DUCT PENETRATION THROUGH THE (E) DUCT SHAFT WITH 3M UL LISTED FIRE STOP SYSTEM TO MATCH RATING OF EXISTING SHAFT.
9. SEE STRUCTURAL DRAWINGS FOR (N) EXHAUST FAN 200-EF-1C AND FUME HOOD EXHAUST FAN 200-FE-1 FOR MOUNTING DETAILS.

DEMOLITION NOTES:

1. MECHANICAL CONTRACTOR IS RESPONSIBLE FOR ALL COORDINATION WITH ALL OTHER TRADES AND V.A. C.O.T.R. IN ADVANCE PRIOR TO START OF ANY DEMOLITION. SEE PHASE-1 & 2 DEMOLITION NOTES 1, 2 & 3 DRAWING 200-HD-80-1.0 & 200-HD-80-1.1
2. DEMOLISH EXISTING EXHAUST FAN 200-EF-1C, COORDINATE EXTEND OF DEMOLITION WITH NEW WORK.

Revisions:	Date
ISSUE FOR BID	04/17/12
ISSUE FOR 100% REVIEW	02/9/12
ISSUE FOR 95% REVIEW	12/9/11
ISSUE FOR 65% REVIEW	07/7/11
ISSUE FOR 35% REVIEW	03/24/11

CONSULTANTS:

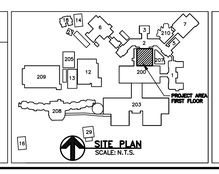

REGISTERED PROFESSIONAL ENGINEER LORENZO A. RIOS CASTILLON NO. M 21000 EXP. 06/30/2013 MECHANICAL STATE OF CALIFORNIA

STAMP

ARCHITECT/ENGINEERS:

ADVANCE DESIGN CONSULTANTS, INC
PROFESSIONAL ENGINEERS
998 PARK AVENUE SAN JOSE, CA 95126
(408) 297-1881 FAX: (408) 294-3186
WWW.ADCENGINEERS.COM

ATTENTION:

ONLY WET SIGNED DOCUMENTS CONSTITUTE ADVANCE DESIGN CONSULTANTS, INC. PROFESSIONAL WORK, AND BECAUSE OTHER REPRODUCIBLE DOCUMENTS MAY BE EASILY ALTERED WITHOUT THE CONSENT OF ADVANCE DESIGN CONSULTANTS, INC., THE WET SIGNED DOCUMENTS MUST BE REFERRED TO FOR THE ORIGINAL AND CORRECT INFORMATION. IF THERE ANY DIFFERENCES BETWEEN THE WET SIGNED DOCUMENTS AND ANY OTHER DOCUMENTS, THE WET SIGNED DOCUMENTS SHALL GOVERN.

ADVANCE DESIGN CONSULTANTS, INC. IS NOT RESPONSIBLE FOR ANY MODIFICATIONS MADE TO OUR DOCUMENTS BY ANYONE OTHER THAN AUTHORIZED REPRESENTATIVES OF ADVANCE DESIGN CONSULTANTS, INC.

Drawing Title: PENTHOUSE DEMOLITION FLOOR PLAN

Approved Project Director:

Project Title: BUILDING 200 DENTAL CLINIC

Location: 4150 CLEMENT ST. SAN FRANCISCO, CA

Date: NOVEMBER 2011 | Checked: L. RIOS | Drawn: J.AGUIRRE

Project Number: 662-11-108

Building Number: 200

Drawing Number: 200-H-80-2.0

Dwg. 41 of 44

Office of Construction and Facilities Management

Department of Veterans Affairs

VA FORM 08-6231

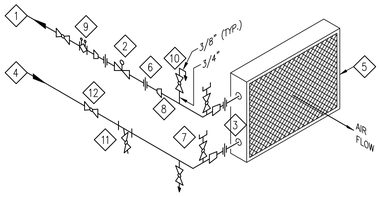

1. HOT WATER RETURN–FOR PIPE SIZE SEE HEATING HOT WATER FLOW DIAGRAM.
2. 2–WAY TEMPERATURE CONTROL VALVE–VERIFY PIPING ARRANGEMENT WITH ACCEPTED TEMPERATURE CONTROL VALVE FOR PROPER OPERATIONAL USE PRIOR TO INSTALLATION.
3. VERIFY ACTUAL INLET AND OUTLET PIPING CONNECTION LOCATION AT COIL. WATER FLOW SHALL BE PIPED WITH THE SUPPLY WATER PIPING CONNECTED TO LEAVING AIR SIDE OF COIL (IN) AND THE LEAVING WATER PIPING CONNECTED TO THE ENTERING AIR SIDE OF THE COIL (OUT). (WATER FLOW PIPED COUNTER FLOW TO THE AIR FLOW)
4. HOT WATER SUPPLY–FOR PIPE SIZE SEE HEATING HOT WATER FLOW DIAGRAM
5. COIL
6. UNION (TYP.)
7. BALL VALVE TEST COCK (TYP.)
8. REDUCER (TYP.)
9. CIRCUIT SETTER PLUS
10. 3/4" MANUAL AIR VENT W/ 3/8" DRAIN RUN TO FLOOR DRAIN.
11. Y – STRAINER
12. BALL VALVE

1 HEATING COIL PIPING (2–WAY)
SCALE: NONE

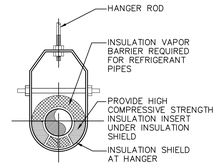

ADJUSTABLE CLEVIS HANGER
(USE ONLY WHERE INDICATED IN SPECIFICATION)

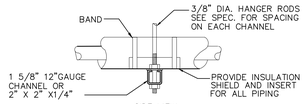

SIDE VIEW
TRAPEZE HANGER FOR UP TO 1000 LB. UNIFORM LOAD

2 PIPE HANGER
SCALE: NONE

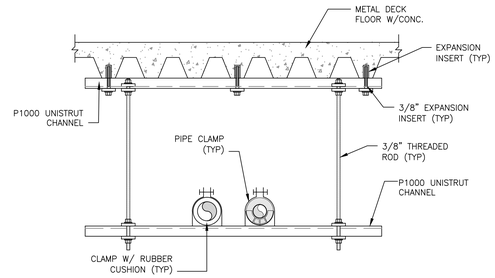

COORDINATE EQUIPMENT SUPPORT WITH STRUCTURAL DRAWINGS

3 PIPE SUPPORT
SCALE: NONE

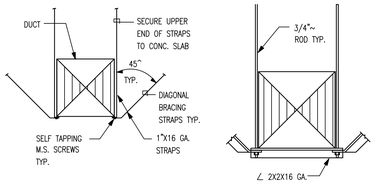

BRACING STRAPS
DUCT SMALLER THAN 24 INCHES SQUARE

ROD SUPPORT
DUCT LARGER THAN 24 INCHES SQUARE

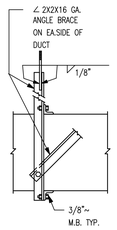

ANGLE SUPPORT

4 DUCT SUPPORT
SCALE: NONE

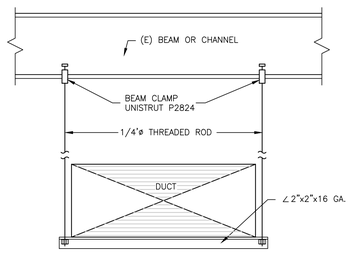

5 DUCT SUPPORT UNDER BEAM OR CHANNEL
SCALE: NONE

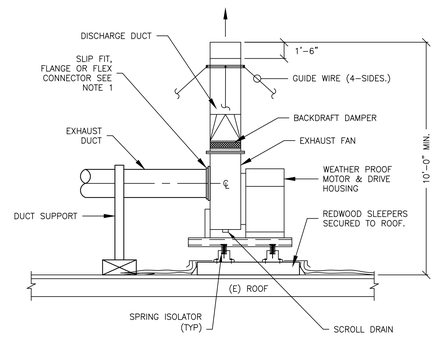

NOTE: 1 MECHANICAL CONTRACTOR FURNISH AND INSTALL FAN INLET TRANSITION, INLET COLLAR FOR SLIP FIT, FLANGE OR FLEX CONNECTOR, SS CLAMPS AS REQUIRED PER MANUFACTURERS RECOMMENDATION.

6 ROOF FAN MOUNTING DETAIL
SCALE: N.T.S.

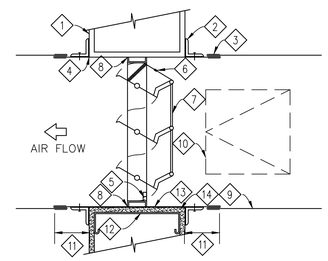

1. WALL
2. 1–3/4"x1–3/4"x1/8" ANGLES BOLTED TO SLEEVE WITH 1/4"ø BOLTS AT 5" O.C. MAXIMUM ALL AROUND.
3. "S" CLIP DUCT CONNECTION (NOT SCREWED OR BOLTED TO DUCT)
4. SLEEVE FURNISHED WITH FIRE DAMPER.
5. SPRING CLIP – LOCATED ON SAME SIDE AS ACCESS PANEL.
6. FUSIBLE LINK
7. STATE FIRE MARSHALL APPROVED AND UL LISTED MULTI–BLADE OR SHUTTER FIRE DAMPER
8. TACK WELD TO SLEEVE AT 4" INTERVALS ALL AROUND BOTH SIDES OF FRAME.
9. DUCT
10. ACCESS DOOR LOCATED ON SAME SIDE AS SPRING CLIPS – SEE SPECIFICATIONS.
11. 3" MINIMUM
12. METAL OR WOOD STUD WALL CONSTRUCTION.
13. PROVIDE REQUIRED CLEARANCE BETWEEN SLEEVE AND WALL OPENING.
14. OPENINGS TO BE LINED WITH FIRE RESISTANT MATERIAL WITH RATING EQUAL TO THAT OF WALL

7 FIRE/SMOKE DAMPER AT WALL OR SHAFT
SCALE: NONE

ISSUE FOR BID	04/17/12
ISSUE FOR 100% REVIEW	02/9/12
ISSUE FOR 95% REVIEW	12/9/11
ISSUE FOR 65% REVIEW	07/7/11
ISSUE FOR 35% REVIEW	03/24/11
Revisions:	Date

CONSULTANTS:

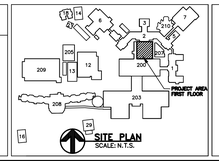

REGISTERED PROFESSIONAL ENGINEER LORENZO A. RIOS CASTELLON NO. M 21000 EXP. 06/30/2013 MECHANICAL STATE OF CALIFORNIA

STAMP

ARCHITECT/ENGINEERS:

ADVANCE DESIGN CONSULTANTS, INC
PROFESSIONAL ENGINEERS
998 PARK AVENUE SAN JOSE, CA 95126
(408) 297–1881 FAX: (408) 294–3186
WWW.ADCENGINEERS.COM

ATTENTION:
ONLY WET SIGNED DOCUMENTS CONSTITUTE ADVANCE DESIGN CONSULTANTS, INC. PROFESSIONAL WORK AND BECAUSE OTHER REPRODUCIBLE DOCUMENTS MAY BE EASILY ALTERED WITHOUT THE CONSENT OF ADVANCE DESIGN CONSULTANTS, INC., THE WET SIGNED DOCUMENTS MUST BE REFERRED TO FOR THE ORIGINAL AND CORRECT INFORMATION. IF THERE ANY DIFFERENCES BETWEEN THE WET SIGNED DOCUMENTS AND ANY OTHER DOCUMENTS, THE WET SIGNED DOCUMENTS SHALL GOVERN.
ADVANCE DESIGN CONSULTANTS, INC. IS NOT RESPONSIBLE FOR ANY MODIFICATIONS MADE TO OUR DOCUMENTS BY ANYONE OTHER THAN AUTHORIZED REPRESENTATIVES OF ADVANCE DESIGN CONSULTANTS, INC.

Drawing Title: EAST BASEMENT MECHANICAL ROOM HVAC PARTIAL PLAN

Approved Project Director:

Project Title: BUILDING 200 DENTAL CLINIC

Location: 4150 CLEMENT ST. SAN FRANCISCO, CA

Date: NOVEMBER 2011 | Checked: L. RIOS | Drawn: J. AGUIRRE

Project Number: 662-11-108

Building Number: 200

Drawing Number: 200-H-80-3.0

Dwg. 42 of 44

Office of Construction and Facilities Management

Department of Veterans Affairs

VA FORM 08–6231

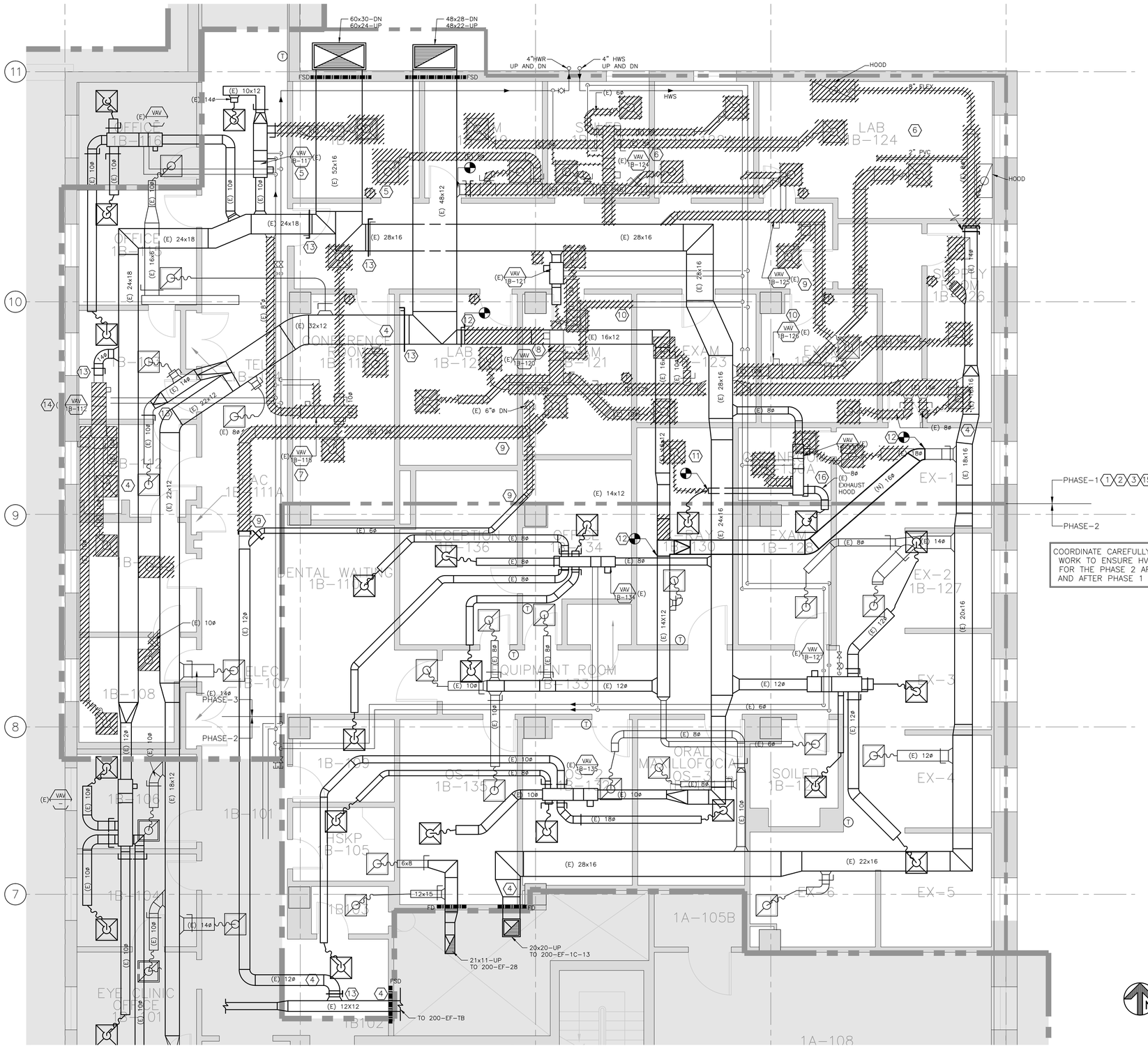

COORDINATE CAREFULLY DEMOLITION WORK TO ENSURE HVAC SERVICE FOR THE PHASE 2 AREA DURING AND AFTER PHASE 1 DEMOLITION.

MECHANICAL DEMOLITION PLAN PHASE 1

SCALE: 1/4" = 1'-0"

DEMOLITION NOTES:

PHASE-1:

1. MECHANICAL CONTRACTOR SHALL COORDINATE WITH THE V.A. PROJECT MANAGER IN ADVANCE, SHALL PREPARE AND SUBMIT A DETAIL SEQUENCE OF DEMOLITION AND NEW WORK TO AVOID ANY DISTURBANCE TO THE HOSPITAL DAILY ACTIVITIES. NO WORK SHALL BEGIN PRIOR TO APPROVAL OF THIS SEQUENCE OF CONSTRUCTION. PROPOSED SEQUENCE OF WORK SHALL BE ORIENTED AROUND ADJACENT ACTIVE PHASE-1 DENTAL CLINIC; OFFICES AND EXISTING CORRIDOR ASSURING THAT NO HEAVY STEEL LIFTING SUCH AS DENTAL EQUIPMENT, EXCESSIVE NOISE, CONCRETE CORE DRILLING ARE TRANSMITTED TO THE HOSPITAL BUILDING DURING THE V.A. OFFICE HOURS. PROTECT THE PUBLIC WITH BARRICADE GUARD LIGHTS, POSTING SIGNS DURING THE ENTIRE PROGRESS OF WORK.
2. MECHANICAL CONTRACTOR IS RESPONSIBLE FOR ALL COORDINATION WITH ALL OTHER TRADES THE SEQUENCE OF HVAC VAV BOX AND ACCESSORIES, DUCTWORK DEMOLITION WITH THE (E) CEILING MEMBERS, LIGHTS FIXTURES, ELECTRICAL CONDUITS, PLUMBING PIPING, ETC... AND THE ITEMS THAT WILL REMAIN IN PLACED.
3. DEMOLITION WORK IS NOT LIMITED TO WHAT IS SHOWN IN THE PLAN AND SHALL BE COORDINATED WITH ALL OTHER TRADES AS REQUIRED TO ACCOMPLISH NEW WORK. DEMOLITION SHALL BE CAREFULLY PERFORMED TO AVOID DAMAGES TO EXISTING SURFACES, EQUIPMENT, ELECTRICAL, PIPING, STRUCTURAL MEMBERS AND THOSE ITEMS THAT SHALL REMAIN IN PLACE. RESTORED DAMAGES RESULTING FROM DEMOLITION AND NEW WORK WITHOUT EXTRA COST TO THE OWNER.
4. MECHANICAL CONTRACTOR SHALL TAKE READING ON SUPPLY & EXHAUST GRIMES CFM'S AND RECORD BEFORE THE START OF ANY PARTIAL DUCTWORK DEMOLITION. SEE WHERE INDICATED IN THE PLAN.
5. RM-1B-117: DEMOLISH (E) HVAC DUCTWORK, SUPPLY DIFFUSERS, EXHAUST GRILLES AND COORDINATE EXTENT OF DEMOLITION WITH THE NEW WORK. RELOCATE (E) THERMOSTAT TO THE CORRIDOR.
6. RM-1B-124 LABORATORY, 119, 122, 122A, EXAM & SOILED: COORDINATE REMOVAL AND STORAGE OF (E) CABINET AND EXHAUST HOOD TO BE REUSED ON PHASE 2. DEMOLISH (E) VAV BOX 1B-124 & ACCESSORIES, HVAC DUCTWORK, SUPPLY DIFFUSERS, EXHAUST GRILL AND COORDINATE EXTEND OF DEMOLITION WITH THE NEW WORK.
7. RM-1B-118 CONFERENCE: DEMOLISH (E) VAV BOX 1B-118 & ACCESSORIES, HVAC DUCTWORK, SUPPLY DIFFUSER, EXHAUST GRILLE AND COORDINATE EXTEND OF DEMOLITION WITH THE NEW WORK.
8. RM-1B-120 LABORATORY 1B-123 EXAM: DEMOLISH (E) VAV BOX 1B-120 & ACCESSORIES, PARTIAL DUCTWORK SUPPLY DIFFUSERS, EXHAUST GRILLE, AND COORDINATE EXTEND OF DEMOLITION WORK WITH THE NEW WORK.
9. RM-1B-125 EXAM, CORRIDOR: DEMOLISH (E) VAV BOX 1B-125 & ACCESSORIES, PARTIAL HVAC DUCTWORK SUPPLY DIFFUSERS, EXHAUST GRILLE, AND COORDINATE EXTEND OF DEMOLITION WORK WITH THE NEW WORK. TEMPORARILY CAP END OF TB EXHAUST DUCT AFTER PARTIAL DEMOLITION.
10. RM-1B-126 SUPPLY RM 1B-124 LAB: DEMOLISH (E) VAV BOX 1B-126 & ACCESSORIES, PARTIAL HVAC DUCTWORK SUPPLY DIFFUSERS, EXHAUST GRILLE, AND COORDINATE EXTEND OF DEMOLITION WORK WITH THE NEW WORK.
11. RM-1B-130A CLEAN RM, 1B-128 EXAM, 1B-130 X-RAY: PARTIALLY DEMOLISH (E) HVAC DUCTWORK, SUPPLY DIFFUSERS, EXHAUST GRILLE, AND COORDINATE EXTEND OF DEMOLITION WORK WITH THE NEW WORK. TEMPORARILY RELOCATE (E) SUPPLY DIFFUSER AT THE X-RAY ROOM. RECONNECT DUCT WORK AS REQUIRED.
12. PARTIALLY DEMOLISH (E) 16x12 AND 14X12 EXHAUST DUCT AS INDICATED IN THE PLAN. RECONNECT END OF PARTIALLY DEMOLISHED EXHAUST DUCT TO NEW TEMPORARY 16"ø EXHAUST DUCT AND CONNECT TO THE EXISTING.
13. MECHANICAL CONTRACTOR IS RESPONSIBLE AND SHALL FIELD VERIFY THAT EXISTING SUPPLY AND EXHAUST MAIN AND BRANCH DUCTWORK HAS EXISTING MANUAL VOLUME DAMPER REQUIRED FOR PROPER AIR BALANCING. CONTRACTOR SHALL MARK ALL MISSING DAMPERS AND SHALL FURNISH AND INSTALL ON THE NEW WORK FOR PROPER SYSTEM AIR BALANCING.
14. RM-1B-112, 1B-111 AND 1B-108 OFFICE DEMOLISH EXISTING VAV-1B-112, ASSOCIATED ACCESSORIES AND DUCT WORK. COORDINATE EXTENT OF DEMOLITION WITH THE NEW WORK.
15. MECHANICAL CONTRACTOR IS RESPONSIBLE THAT EXISTING EXHAUST AIR CFM'S AT PHASE-2 AREAS ARE MAINTAINED TO THE SAME AIR BALANCE BEFORE AND AFTER THE PHASE-1 DEMOLITION.
16. CAREFULLY REMOVE EXISTING EXHAUST HOOD AND ASSOCIATED EXHAUST FAN TO BE REUSED.

Revisions:	Date
ISSUE FOR BID	04/17/12
ISSUE FOR 100% REVIEW	02/9/12
ISSUE FOR 95% REVIEW	12/9/11
ISSUE FOR 65% REVIEW	07/7/11
ISSUE FOR 35% REVIEW	03/24/11

CONSULTANTS:

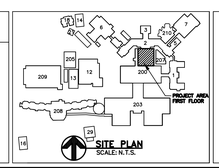

REGISTERED PROFESSIONAL ENGINEER
LORENZO A. RIOS CASTILLON
NO. M 21000
EXP. 06/30/2013
MECHANICAL
STATE OF CALIFORNIA

STAMP

ARCHITECT/ENGINEERS:

ADVANCE DESIGN CONSULTANTS, INC
PROFESSIONAL ENGINEERS
998 PARK AVENUE SAN JOSE, CA 95126
(408) 297-1881 FAX: (408) 294-3186
WWW.ADCENGINEERS.COM

ATTENTION:
ONLY WET SIGNED DOCUMENTS CONSTITUTE ADVANCE DESIGN CONSULTANTS, INC. PROFESSIONAL WORK AND BECAUSE OTHER REPRODUCIBLE DOCUMENTS MAY BE EASILY ALTERED WITHOUT THE CONSENT OF ADVANCE DESIGN CONSULTANTS, INC., THE WET SIGNED DOCUMENTS MUST BE REFERRED TO FOR THE ORIGINAL AND CORRECT INFORMATION. IF THERE ANY DIFFERENCES BETWEEN THE WET SIGNED DOCUMENTS AND ANY OTHER DOCUMENTS, THE WET SIGNED DOCUMENTS SHALL GOVERN.
ADVANCE DESIGN CONSULTANTS, INC. IS NOT RESPONSIBLE FOR ANY MODIFICATIONS MADE TO OUR DOCUMENTS BY ANYONE OTHER THAN AUTHORIZED REPRESENTATIVES OF ADVANCE DESIGN CONSULTANTS, INC.

Drawing Title: MECHANICAL DEMOLITION

Approved Project Director:

Project Title: BUILDING 200 DENTAL CLINIC

Location: 4150 CLEMENT ST. SAN FRANCISCO, CA

Date: NOVEMBER 2011 | Checked: L. RIOS | Drawn: J. AGUIRRE

Project Number: 662-11-108

Building Number: 200

Drawing Number: 200-HD-80-1.0

Dwg. 43 of 44

Office of Construction and Facilities Management

Department of Veterans Affairs

VA FORM 08-6231

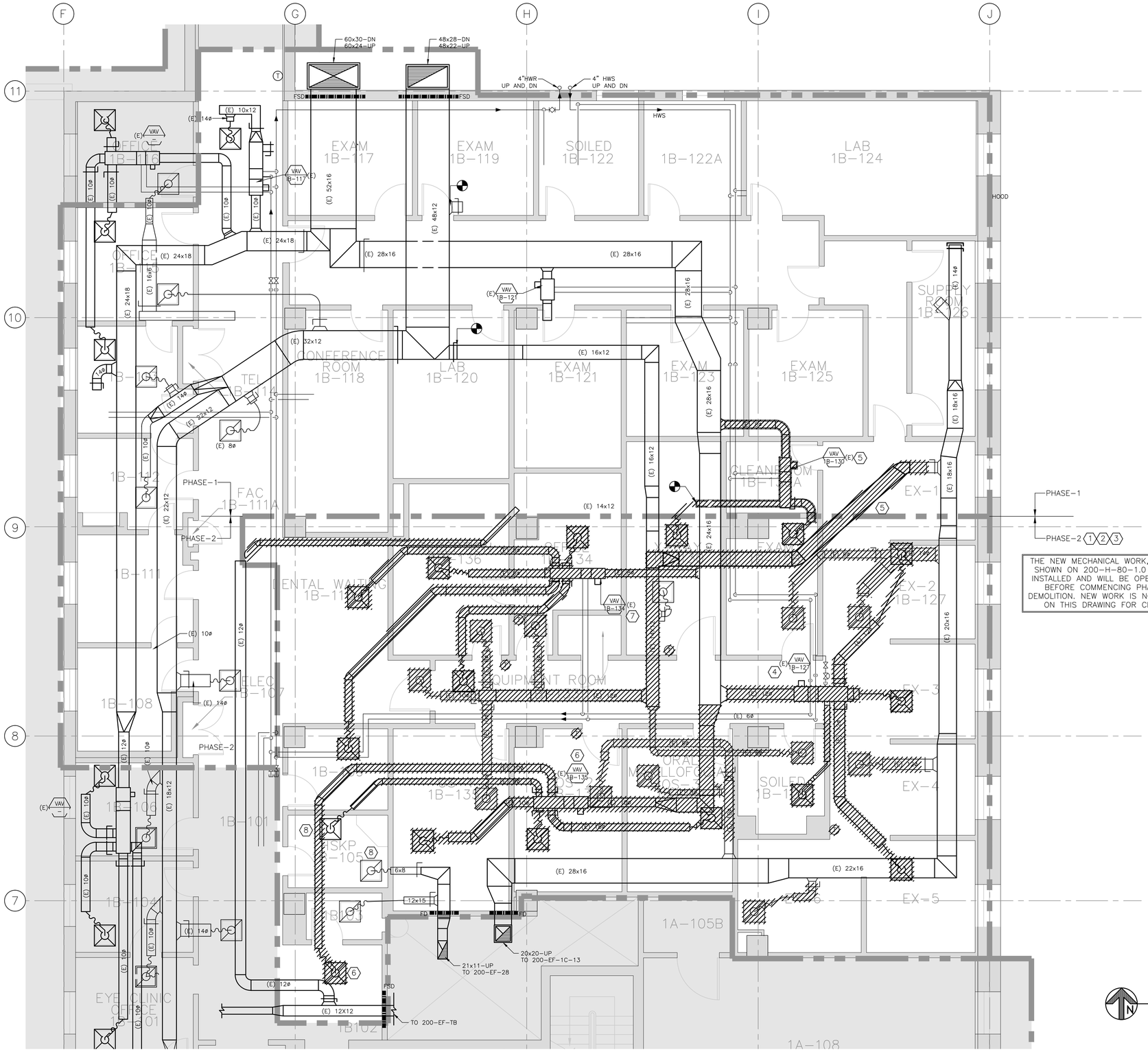

THE NEW MECHANICAL WORK, PHASE 1 SHOWN ON 200-H-80-1.0 WILL BE INSTALLED AND WILL BE OPERATIONAL BEFORE COMMENCING PHASE-2 DEMOLITION. NEW WORK IS NOT SHOWN ON THIS DRAWING FOR CLARITY.

MECHANICAL DEMOLITION PLAN PHASE 2

SCALE: 1/4" = 1'-0"

DEMOLITION NOTES:

PHASE 2:

1. MECHANICAL CONTRACTOR SHALL COORDINATE WITH THE V.A. PROJECT MANAGER IN ADVANCE, SHALL PREPARE AND SUBMIT A DETAIL SEQUENCE OF DEMOLITION AND NEW WORK TO AVOID ANY DISTURBANCE TO THE HOSPITAL DAILY ACTIVITIES. NO WORK SHALL BEGIN PRIOR TO APPROVAL OF THIS SEQUENCE OF CONSTRUCTION. PROPOSED SEQUENCE OF WORK SHALL BE ORIENTED AROUND ADJACENT ACTIVE PHASE-2 DENTAL CLINIC; OFFICES AND EXISTING CORRIDOR ASSURING THAT NO HEAVY STEEL LIFTING SUCH AS DENTAL EQUIPMENT, EXCESSIVE NOISE, CONCRETE CORE DRILLING ARE TRANSMITTED TO THE HOSPITAL BUILDING DURING THE V.A. OFFICE HOURS. PROTECT THE PUBLIC WITH BARRICADE GUARD LIGHTS, POSTING SIGNS DURING THE ENTIRE PROGRESS OF WORK.
2. MECHANICAL CONTRACTOR IS RESPONSIBLE FOR ALL COORDINATION WITH ALL OTHER TRADES THE SEQUENCE OF HVAC DUCTWORK DEMOLITION WITH THE (E) CEILING MEMBERS, LIGHTS FIXTURES, ELECTRICAL CONDUITS, PLUMBING PIPING, ETC... AND THE ITEMS THAT WILL REMAIN IN PLACED.
3. DEMOLITION WORK IS NOT LIMITED TO WHAT IS SHOWN IN THE PLAN AND SHALL BE COORDINATED WITH ALL OTHER TRADES AS REQUIRED TO ACCOMPLISH NEW WORK. DEMOLITION SHALL BE CAREFULLY PERFORMED TO AVOID DAMAGES TO EXISTING SURFACES, EQUIPMENT, ELECTRICAL, PIPING, STRUCTURAL MEMBERS AND THOSE ITEMS THAT SHALL REMAIN IN PLACE. RESTORED DAMAGES RESULTING FROM DEMOLITION AND NEW WORK WITHOUT EXTRA COST TO THE OWNER.
4. RM-1B-127 EX-2, EX-3, EX-4, EX-5 & EX-6: DEMOLISH VAV BOX 1B-127 & ACCESSORIES, EXISTING PARTIAL HVAC DUCTWORK, SUPPLY DIFFUSERS, EXHAUST GRILLES AND COORDINATE EXTENT OF DEMOLITION WITH THE NEW WORK.
5. RM-1B-128 EXAM, RM-1B-130 X-RAY, 1B-133 LOCKER, DEMOLISH EXISTING VAV BOX 1B-130 & ACCESSORIES, PARTIAL HVAC DUCTWORK, SUPPLY DIFFUSER, RETURN & EXHAUST GRILLES AND COORDINATE EXTENT OF DEMOLITION WITH THE NEW WORK.
6. RM-1B-135 OS-1, 1B-132 OS-2, 1B-131 OS-3, 1B-120 SOILED, 1B-105, 1B-102: DEMOLISH EXISTING VAV BOX 1B-135 & ACCESSORIES, PARTIAL HVAC DUCTWORK, SUPPLY DIFFUSERS, EXHAUST GRILLES AND COORDINATE EXTENT OF DEMOLITION WITH THE NEW WORK. INSTALL CEILING TILE AT CORRIDOR ADJACENT TO THE ELEVATOR AFTER SUPPLY DIFFUSER DEMOLITION.
7. RM-1B-110, 1B-109, 1B-136, 1B-134: DEMOLISH EXISTING VAV BOX 1B-134, ASSOCIATED ACCESSORIES AND DUCTWORK. COORDINATE EXTENT OF DEMOLITION WITH THE NEW WORK.
8. MECHANICAL CONTRACTOR SHALL TAKE READING ON SUPPLY AND EXHAUST CFM TO RM-1B-105 HSKP BEFORE THE START OF VAV-1B-135 DEMOLITION.

Revisions:	Date
ISSUE FOR BID	04/17/12
ISSUE FOR 100% REVIEW	02/9/12
ISSUE FOR 95% REVIEW	12/9/11
ISSUE FOR 65% REVIEW	07/7/11
ISSUE FOR 35% REVIEW	03/24/11

CONSULTANTS:

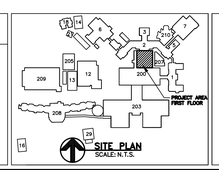

SITE PLAN
SCALE: N.T.S.

REGISTERED PROFESSIONAL ENGINEER
LORENZO A. RIOS CASTILLON
NO. M 21000
EXP. 06/30/2013
MECHANICAL
STATE OF CALIFORNIA

STAMP

ARCHITECT/ENGINEERS:

ADVANCE DESIGN CONSULTANTS, INC
PROFESSIONAL ENGINEERS
998 PARK AVENUE SAN JOSE, CA 95126
(408) 297-1881 FAX: (408) 294-3186
WWW.ADCENGINEERS.COM

ATTENTION:
ONLY WET SIGNED DOCUMENTS CONSTITUTE ADVANCE DESIGN CONSULTANTS, INC. PROFESSIONAL WORK AND BECAUSE OTHER REPRODUCIBLE DOCUMENTS MAY BE EASILY ALTERED WITHOUT THE CONSENT OF ADVANCE DESIGN CONSULTANTS, INC., THE WET SIGNED DOCUMENTS MUST BE REFERRED TO FOR THE ORIGINAL AND CORRECT INFORMATION. IF THERE ANY DIFFERENCES BETWEEN THE WET SIGNED DOCUMENTS AND ANY OTHER DOCUMENTS, THE WET SIGNED DOCUMENTS SHALL GOVERN.
ADVANCE DESIGN CONSULTANTS, INC. IS NOT RESPONSIBLE FOR ANY MODIFICATIONS MADE TO OUR DOCUMENTS BY ANYONE OTHER THAN AUTHORIZED REPRESENTATIVES OF ADVANCE DESIGN CONSULTANTS, INC.

Drawing Title: MECHANICAL DEMOLITION

Approved Project Director:

Project Title: BUILDING 200 DENTAL CLINIC

Location: 4150 CLEMENT ST. SAN FRANCISCO, CA

Date: NOVEMBER 2011 | Checked: L. RIOS | Drawn: J. AGUIRRE

Project Number: 662-11-108

Building Number: 200

Drawing Number: 200-HD-80-2.0

Dwg. 44 of 44

Office of Construction and Facilities Management

Department of Veterans Affairs

VA FORM 08-6231