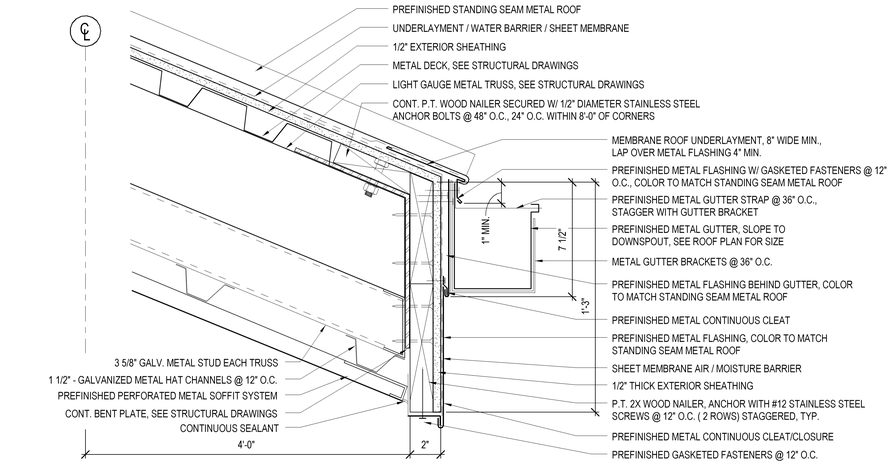

1 AS143 ROOF EDGE/GUTTER DETAIL AT COVERED DROP-OFF
3" = 1'-0"

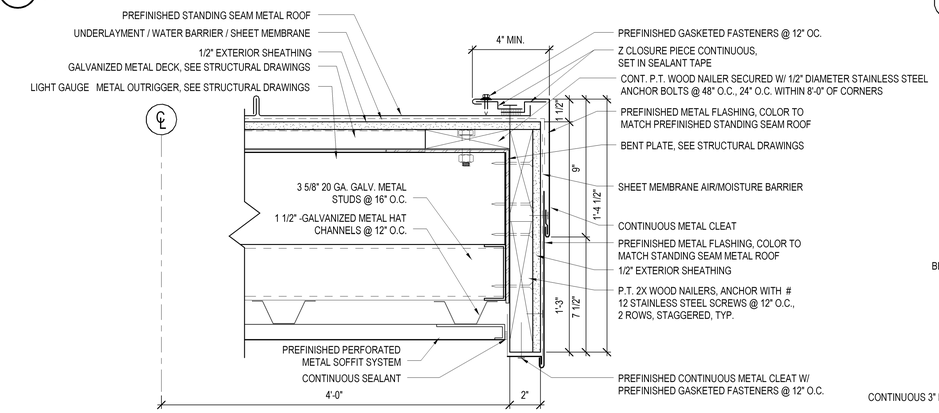

2 AS143 GABLE RAKE EDGE DETAIL AT COVERED DROP-OFF
3" = 1'-0"

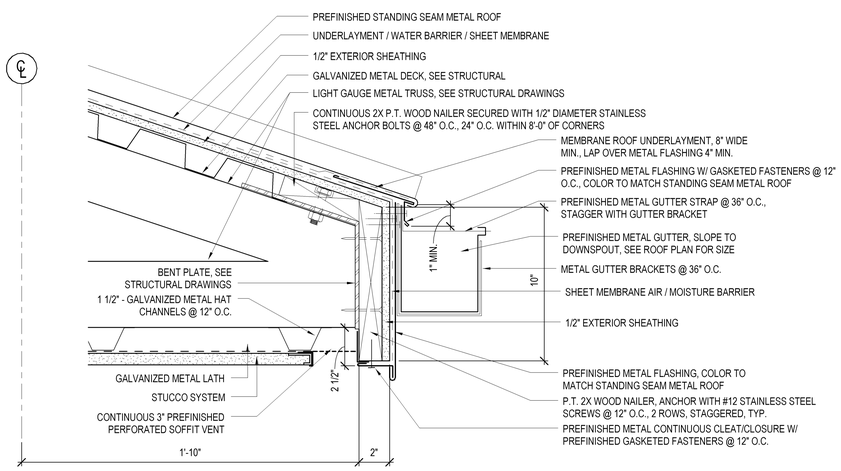

3 AS143 ROOF EDGE/GUTTER DETAIL AT COVERED WALK
3" = 1'-0"

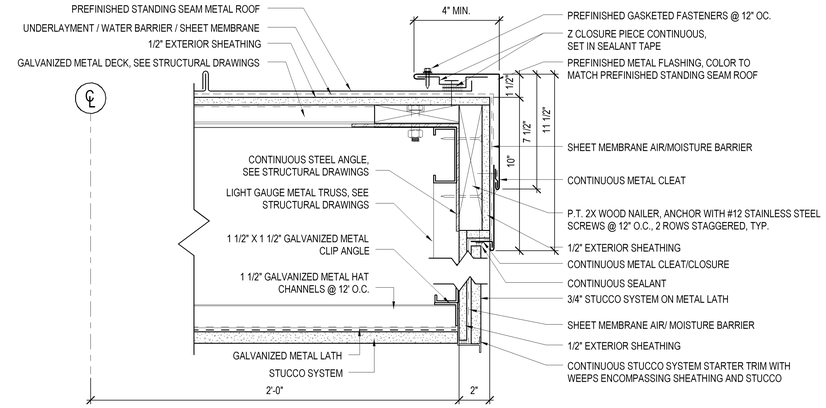

4 AS143 GABLE RAKE EDGE AT COVERED WALK DETAIL
3" = 1'-0"

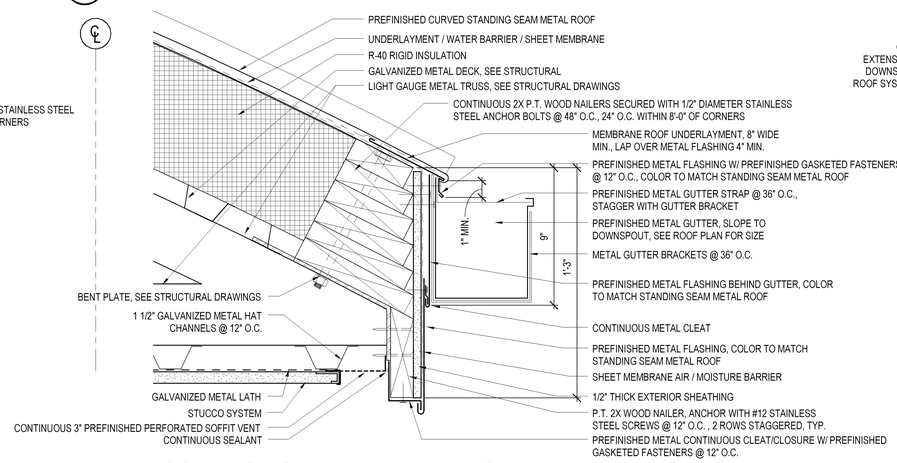

5 AS143 ROOF EDGE/GUTTER DETAIL AT CURVED ENTRY ROOF
3" = 1'-0"

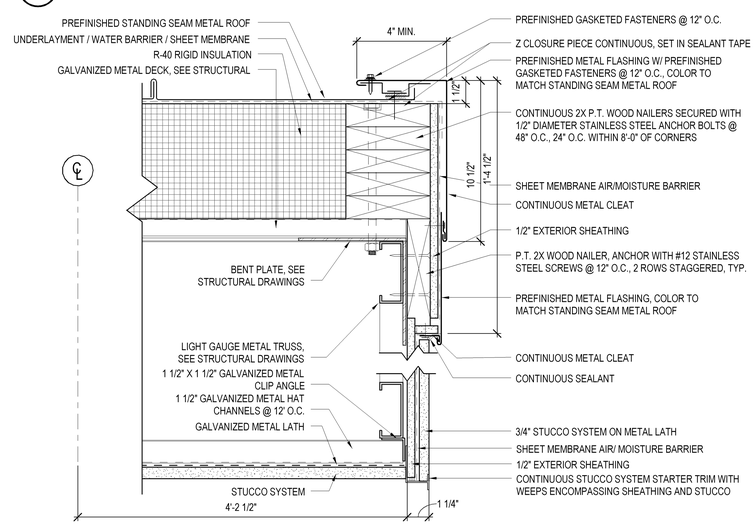

6 AS143 CURVED FASCIA AT ENTRY DETAIL
3" = 1'-0"

ROOF DETAIL NOTES

1. SEE STRUCTURAL DRAWINGS FOR GAUGE OF GALVANIZED METAL SOFFIT FRAMING.

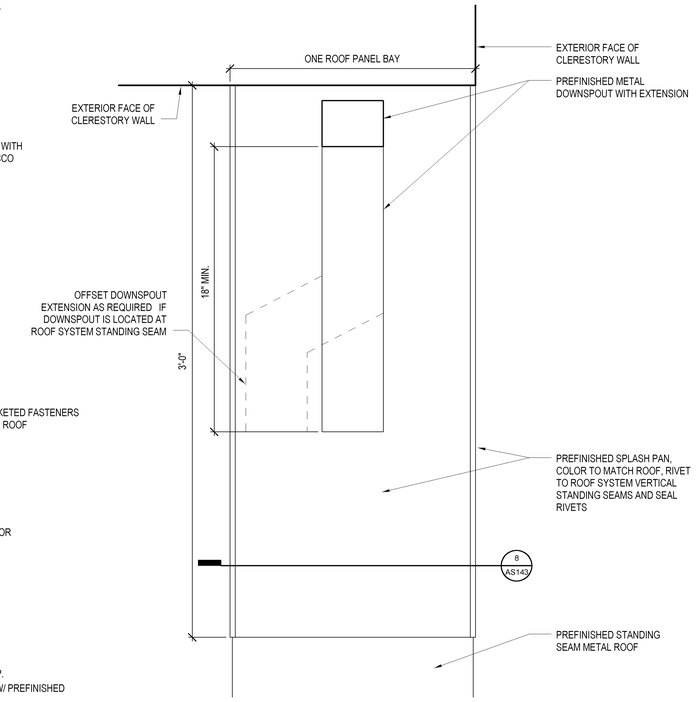

7 AS143 SPLASH PAN PLAN DETAIL
3" = 1'-0"

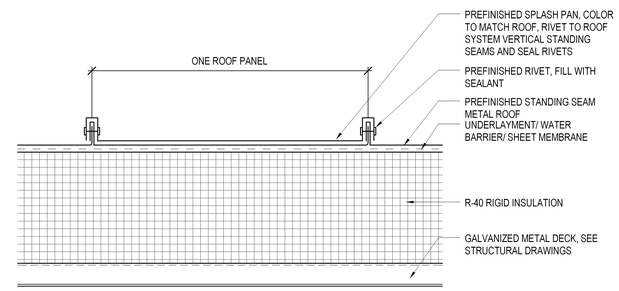

8 AS143 SPLASH PAN SECTION
3" = 1'-0"

0 2" 4" 8"
SCALE: 3" = 1'-0"

FINAL SUBMISSION

Revisions:	Date

CONSULTANTS:

CIVIL:
KENNETH HORNE & ASSOCIATES
7201 NORTH 9TH AVENUE, STE. 6
PENSACOLA, FLORIDA 32504
PH: (850) 471-6005
FX: (850) 471-0093

COMM/IDS:
SCHMIDT CONSULTING GROUP, INC.
139 EAST GOVERNMENT STREET
PENSACOLA, FLORIDA 32502
PH: (850) 438-0050
FX: (850) 432-8631

SURVEYORS:
KCI TECHNOLOGIES, INC.
10401 HIGHLAND MANOR DRIVE, SUITE 120
TAMPA, FLORIDA 33610
PH: (813) 740-2300

LANDSCAPE ARCHITECT:
CSA GROUP, INC.
6300 PICCADILLY SQUARE DRIVE
MOBILE, ALABAMA 36609
PH: (251) 344-4023
FX: (251) 344-4052

ARCHITECTURE:
BULLOCK TICE ASSOCIATES, INC.
909 EAST CERVANTES STREET
PENSACOLA, FL 32501
PH: (850) 434-5444
FX: (850) 432-6208

STATE OF FLORIDA
ROBERT G. MAGGIORE
0013571
REGISTERED ARCHITECT

ARCHITECT/ENGINEERS:

BES DESIGN/BUILD

BES DESIGN/BUILD, LLC
766 Middle St, Fairhope, AL 36532
Phone: 251.990.5778 Fax: 251.990.3716

Drawing Title	ROOF DETAILS
Approved: Project Director	
Project Title	PANAMA CITY JOINT OUTPATIENT CLINIC VA GULF COAST HEALTH CARE
Location	PANAMA CITY, FLORIDA
Date	MARCH 2012
Checked	BM
Drawn	TW/MF
Project Number	520-326
Building Number	-
Drawing Number	AS143
	Dwg. 13 of 42

Office of Construction and Facilities Management

Department of Veterans Affairs

VA FORM 08-6231

D:_RAC2012\Projects\132711-01_BES_JOPC_walls.rvt
3/26/2012 10:01:50 AM