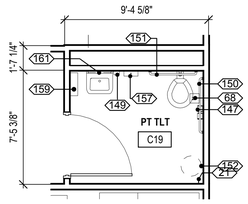

1 AS401 TYPICAL PATIENT TOILET
1/4" = 1'-0"

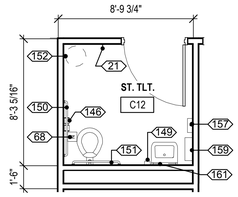

2 AS401 TYPICAL STAFF TOILET
1/4" = 1'-0"

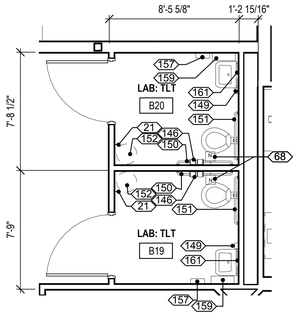

3 AS401 SPECIMEN COLLECTION TOILETS
1/4" = 1'-0"

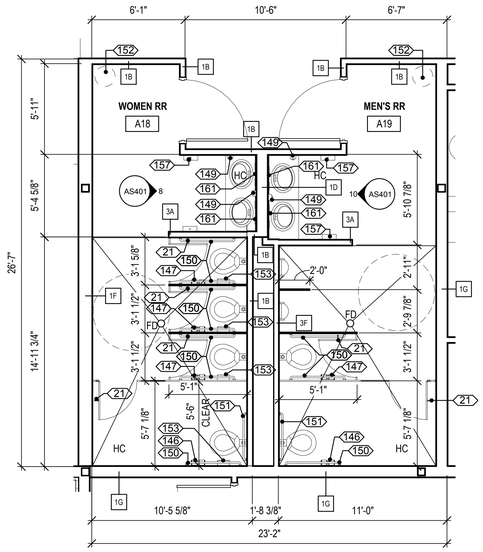

4 AS401 ENLARGED PUBLIC TOILET PLAN
1/4" = 1'-0"

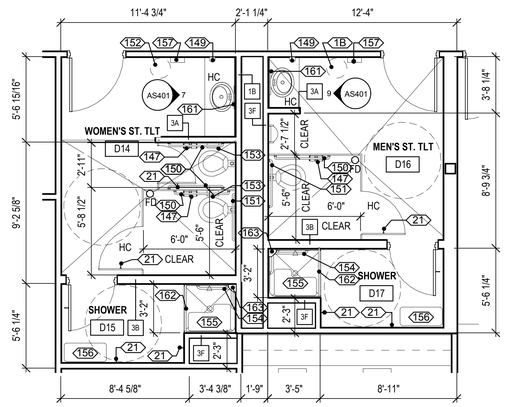

5 AS401 ENLARGED STAFF TOILET PLAN WITH SHOWERS
1/4" = 1'-0"

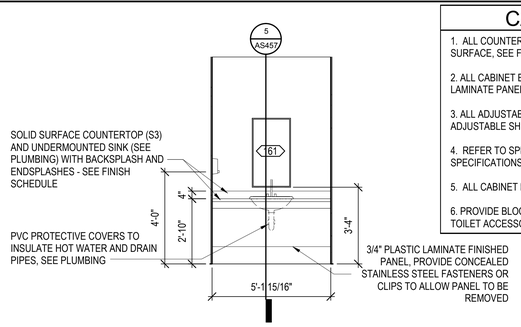

7 AS401 CASEWORK ELEV. - WOMEN'S STAFF RESTROOM
3/8" = 1'-0"

CASEWORK NOTES

1. ALL COUNTERTOPS AND BACKSPLASHES ARE TO BE SOLID SURFACE, SEE FINISH SCHEDULE FOR COLOR.
2. ALL CABINET BODIES, DOORS AND DRAWERS TO BE PLASTIC LAMINATE PANELS, SEE FINISH SCHEDULE FOR COLOR.
3. ALL ADJUSTABLE SHELVES TO BE PLASTIC LAMINATE ON ADJUSTABLE SHELF STANDARDS.
4. REFER TO SPEC SECTION 12 32 00 AND 06 61 16 FOR SPECIFICATIONS FOR BUILT-IN CASEWORK SHOWN ON THIS DRAWING.
5. ALL CABINET PULLS TO BE 3" RECESSED PULLS, U.N.O.
6. PROVIDE BLOCKING IN WALLS FOR CORNER GUARDS, TV BRACKETS, TOILET ACCESSORIES, AND OTHER WALL MOUNTED ITEMS.

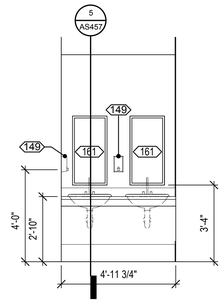

8 AS401 CASEWORK ELEV. - WOMENS PUBLIC RESTROOM
3/8" = 1'-0"

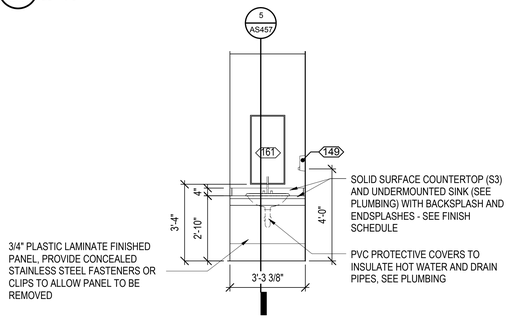

9 AS401 CASEWORK ELEV. - MEN'S STAFF RESTROOM
3/8" = 1'-0"

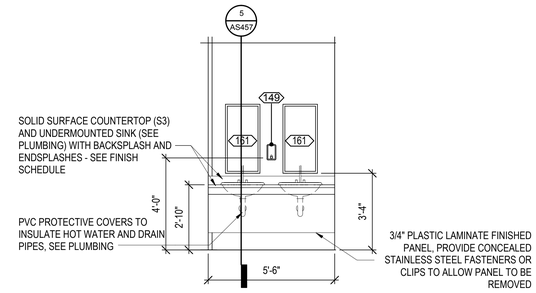

10 AS401 CASEWORK ELEV. - MEN'S PUBLIC RESTROOM
3/8" = 1'-0"

ACCESSORY SCHEDULE

MARK	ITEM/DESCRIPTION	ABBREV.	ACQ/IN STALL	REMARKS
21	DOUBLE COAT HOOK (CLOTHES HOOK)	DCH	CC	SEE 6/AS401
68	NURSE CALL, REFER TO TN DRAWINGS	--	CC	REFER TO TN DRAWINGS
146	TOILET TISSUE DISPENSER (DOUBLE ROLL)	TTD	CC	SEE 6/AS401
147	TOILET TISSUE DISPENSER (DOUBLE ROLL)	TTD	CC	SEE 6/AS401
149	SOAP DISPENSER (WALL MOUNTED)	SD	VV	SEE 6/AS401
150	GRAB BAR (42" LONG)	GB1	CC	SEE 6/AS401
151	GRAB BAR (36" LONG)	GB2	CC	SEE 6/AS401
152	TRASH CAN	TC	VV	--
153	SANITARY NAPKIN DISPOSAL	SND	CC	SEE 6/AS401
154	SHOWER GRAB BAR (L SHAPED)	SGB	CC	SEE 6/AS401
155	SHOWER FOLDING SEAT	SFS	CC	SEE 6/AS401
156	FOLDING SEAT	FS	CC	SEE 6/AS401
157	PAPER TOWEL DISPENSER	PTD	VV	SEE 6/AS401
159	METAL SHELF (18" X 6")	--	CC	MOUNT AT 48" MAX A.F.F.
161	MIRROR (24" X 36")	MR1	CC	SEE 6/AS401
162	SHOWER CURTAIN AND ROD	SCR	CC	MOUNT AT 6'-2" A.F.F
163	SOLID SURFACE CORNER SOAP DISH AND CORNER SHAMPOO SHELF	CS	CC	MOUNT AT 3'-0" AND 4'-0" A.F.F.

GRAPHIC LEGEND

Room name 888A	ROOM NAME TAG	CC	CONTRACTOR FURNISHED AND INSTALLED
	WALL CONSTRUCTION, SEE PARTITION TYPES, SHEET AS-101	VC	VA FURNISHED, CONTRACTOR INSTALLED
A	AIR VALVE, SEE PLUMBING	VV	VA FURNISHED AND INSTALLED
O	OXYGEN VALVE, SEE PLUMBING		
1G	PARTITION TYPE	VV (CF)	VA FURNISHED WITH CONSTRUCTION FUNDS
V	VACUUM VALVE, SEE PLUMBING		
FD	FLOOR DRAIN		EQUIPMENT: SEE EQUIPMENT SCHEDULE DENOTING EQUIPMENT TO BE PROVIDED AND INSTALLED BY THE CONSTRUCTION CONTRACT (CC) OR BY THE VA (VV) AS SCHEDULED
EPO	EMERGENCY POWER OFF		
UR	UNDERCOUNTER REFRIGERATOR (VV)		
UF	UNDERCOUNTER FREEZER (VV)		FF&E FURNITURE (VV)(DESIGNED AND PROVIDED BY VA)
R/REF	REFRIGERATOR (VV)		
S	SHELVES (VV)		BUILT-IN/MODULAR CASEWORK (CC)
111	EQUIPMENT TAG, SEE AS402 FOR EQUIPMENT SCHEDULE		
HC	HANDICAPPED ACCESSIBLE		SINK, SEE PLUMBING

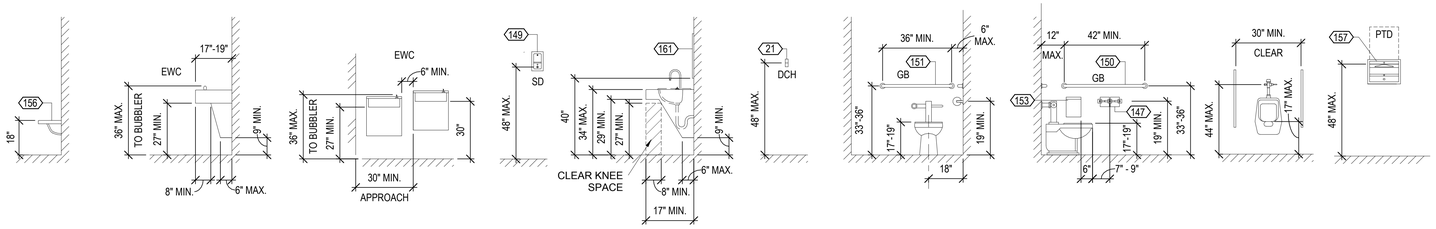

6 AS401 TYP MOUNTING HEIGHTS
3/8" = 1'-0"

0 1'-4" 2'-8" 5'-4"
SCALE: 3/8" = 1'-0"

0 2' 4' 8'
SCALE: 1/4" = 1'-0"

FINAL SUBMISSION

Revisions: Date

CONSULTANTS:

CIVIL:
KENNETH HORNE & ASSOCIATES
7201 NORTH 9TH AVENUE, STE. 6
PENSACOLA, FLORIDA 32504
PH: (850) 471-0005
FX: (850) 471-0093

COMM/IDS:
SCHMIDT CONSULTING GROUP, INC.
139 EAST GOVERNMENT STREET
PENSACOLA, FLORIDA 32502
PH: (850) 438-0050
FX: (850) 432-8631

SURVEYORS:
KCI TECHNOLOGIES, INC.
10401 HIGHLAND MANOR DRIVE, SUITE 120
TAMPA, FLORIDA 33610
PH: (813) 740-2300

LANDSCAPE ARCHITECT:
CSA GROUP, INC.
6300 PICCADILLY SQUARE DRIVE
MOBILE, ALABAMA 36609
PH: (251) 344-4023
FX: (251) 344-4052

ARCHITECTURE:
BULLOCK TICE ASSOCIATES, INC.
909 EAST CERVANTES STREET
PENSACOLA, FL 32501
PH: (850) 434-5444
FX: (850) 432-5208

STATE OF FLORIDA
ROBERT G. MAGGIORE
0013571
29 MARCH 2012
REGISTERED ARCHITECT

ARCHITECT/ENGINEERS:

BES DESIGN/BUILD

BES DESIGN/BUILD, LLC
766 Middle St, Fairhope, AL 36532
Phone: 251.990.5778 Fax: 251.990.3716

Drawing Title: ENLARGED TYPICAL TOILET ROOM FLOOR PLANS

Approved: Project Director

Project Title: PANAMA CITY JOINT OUTPATIENT CLINIC VA GULF COAST HEALTH CARE

Location: PANAMA CITY, FLORIDA

Date: MARCH 2012 | Checked: BM | Drawn: TW/MF

Project Number: 520-326

Building Number: -

Drawing Number: AS401

Dwg. 24 of 42

Office of Construction and Facilities Management

Department of Veterans Affairs

VA FORM 08 - 6231

D:_RAC2012 - rojects\132711-01_BES_JOPC_wallis.rvt
3/26/2012 10:02:36 AM