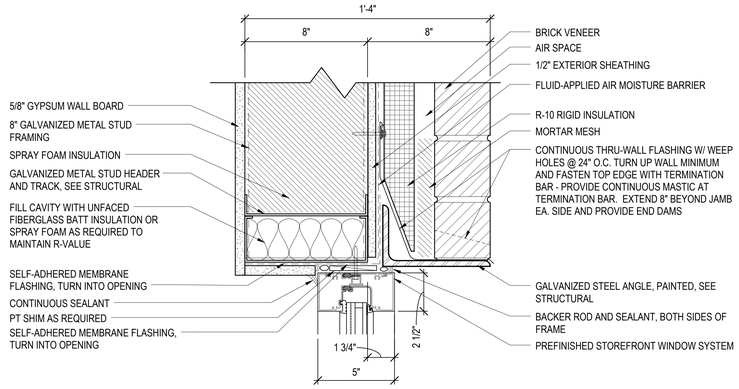

1 AS604 S.F. HEAD DETAIL
3" = 1'-0"

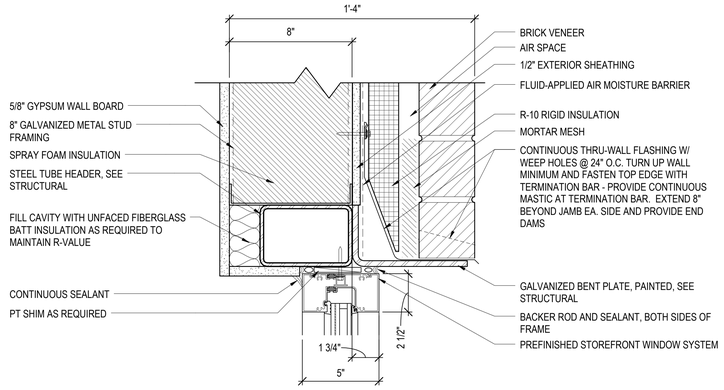

4 AS604 S.F. HEAD DETAIL (AT STEEL TUBE)
3" = 1'-0"

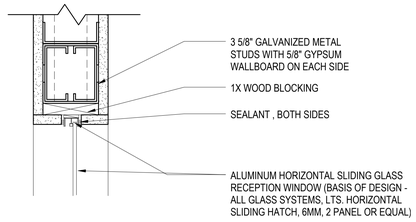

7 AS604 LAB PASS THRU WINDOW HEAD
3" = 1'-0"

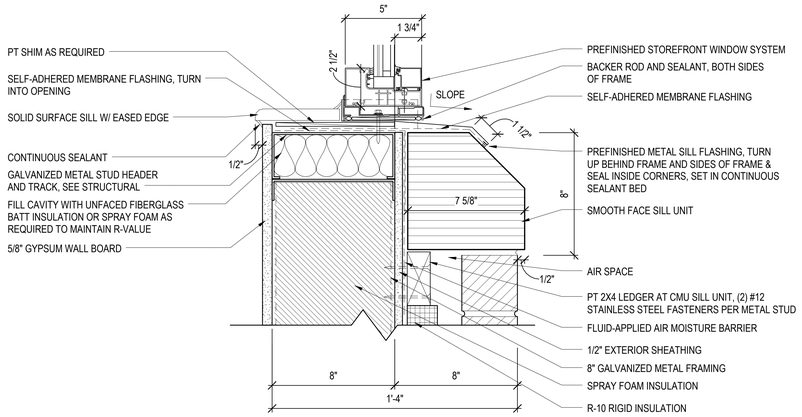

2 AS604 S.F. SILL DETAIL
3" = 1'-0"

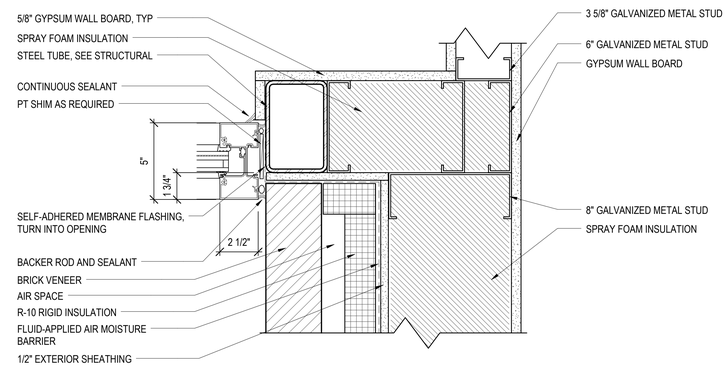

5 AS604 S.F. JAMB DETAIL (AT STEEL TUBE - NO WALL RETURN)
3" = 1'-0"

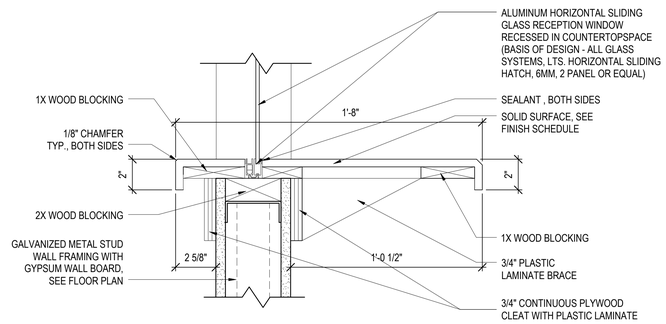

8 AS604 LAB PASS THRU WINDOW SILL
3" = 1'-0"

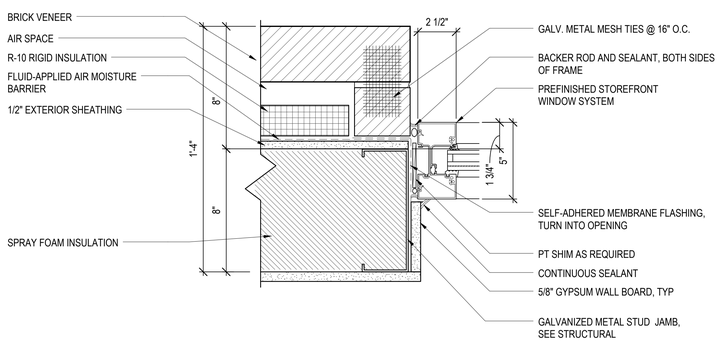

3 AS604 S.F. JAMB DETAIL
3" = 1'-0"

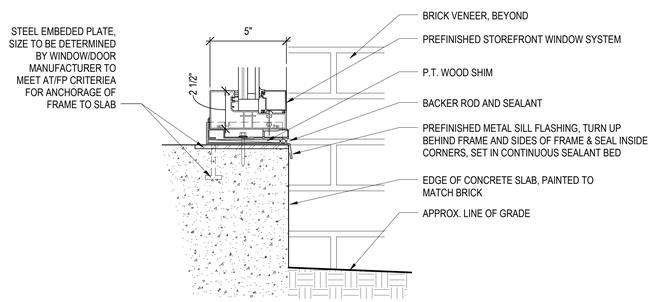

6 AS604 REGULAR S.F. SILL DETAIL
3" = 1'-0"

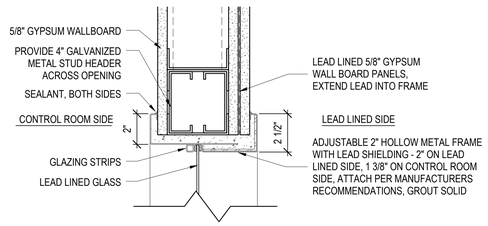

9 AS604 LEAD LINED WINDOW HEAD DETAIL
(JAMB AND SILL SIMILAR)
3" = 1'-0"

0 2" 4" 8"
SCALE: 3" = 1'-0"

FINAL SUBMISSION

Revisions: | Date

CONSULTANTS:

CIVIL:
KENNETH HORNE & ASSOCIATES
7201 NORTH 9TH AVENUE, STE. 6
PENSACOLA, FLORIDA 32504
PH: (850) 471-9005
FX: (850) 471-0093

COMM/IDS:
SCHMIDT CONSULTING GROUP, INC.
139 EAST GOVERNMENT STREET
PENSACOLA, FLORIDA 32502
PH: (850) 438-0050
FX: (850) 432-8631

SURVEYORS:
KCI TECHNOLOGIES, INC.
10401 HIGHLAND MANOR DRIVE, SUITE 120
TAMPA, FLORIDA 33610
PH: (813) 740-2300

LANDSCAPE ARCHITECT:
CSA GROUP, INC.
6300 PICCADILLY SQUARE DRIVE
MOBILE, ALABAMA 36609
PH: (251) 344-4023
FX: (251) 344-4052

ARCHITECTURE:
BULLOCK TICE ASSOCIATES, INC.
909 EAST CERVANTES STREET
PENSACOLA, FL 32501
PH: (850) 434-5444
FX: (850) 432-5208

STATE OF FLORIDA
ROBERT G. MAGIORE
0013571
28 MARCH 2012
REGISTERED ARCHITECT

ARCHITECT/ENGINEERS:

BES DESIGN/BUILD

BES DESIGN/BUILD, LLC
766 Middle St, Fairhope, AL 36532
Phone: 251.990.5778 Fax: 251.990.3716

Drawing Title: WINDOW DETAILS

Approved: Project Director

Project Title: PANAMA CITY JOINT OUTPATIENT CLINIC VA GULF COAST HEALTH CARE

Location: PANAMA CITY, FLORIDA

Date: MARCH 2012 | Checked: BM | Drawn: TW/MF

Project Number: 520-326

Building Number: -

Drawing Number: AS604

Dwg. 41 of 42

Office of Construction and Facilities Management

Department of Veterans Affairs

VA FORM 08 - 6231

D:_RAC2012_rojects\132711-01_BES_JOPC_walls.rvt
3/28/2012 10:03:42 AM